IEC 62106-1

Edition 1.0 2018-10

INTERNATIONAL STANDARD

Radio data system (RDS) – VHF/FM sound broadcasting in the frequency range from 64,0 MHz to 108,0 MHz – Part 1: Modulation characteristics and baseband coding

iTeh STANDARD PREVIEW
(standards.iteh.ai)
IEC 62106-1:2018
https://standards.iteh.ai/catalog/standards/sist/5d090a97-93b6-4b5f-b69a-8d70887beb06/iec-62106-1-2018

IEC 62106-1:2018-10(en)

THIS PUBLICATION IS COPYRIGHT PROTECTED
Copyright © 2018 IEC, Geneva, Switzerland

All rights reserved. Unless otherwise specified, no part of this publication may be reproduced or utilized in any form or by any means, electronic or mechanical, including photocopying and microfilm, without permission in writing from either IEC or IEC's member National Committee in the country of the requester. If you have any questions about IEC copyright or have an enquiry about obtaining additional rights to this publication, please contact the address below or your local IEC member National Committee for further information.

IEC Central Office
3, rue de Varembé
CH-1211 Geneva 20
Switzerland

Tel.: +41 22 919 02 11
info@iec.ch
www.iec.ch

About the IEC
The International Electrotechnical Commission (IEC) is the leading global organization that prepares and publishes International Standards for all electrical, electronic and related technologies.

About IEC publications
The technical content of IEC publications is kept under constant review by the IEC. Please make sure that you have the latest edition, a corrigenda or an amendment might have been published.

IEC Catalogue - webstore.iec.ch/catalogue
The stand-alone application for consulting the entire bibliographical information on IEC International Standards, Technical Specifications, Technical Reports and other documents. Available for PC, Mac OS, Android Tablets and iPad.

IEC publications search - webstore.iec.ch/advsearchform
The advanced search enables to find IEC publications by a variety of criteria (reference number, text, technical committee,…). It also gives information on projects, replaced and withdrawn publications.

IEC Just Published - webstore.iec.ch/justpublished
Stay up to date on all new IEC publications. Just Published details all new publications released. Available online and also once a month by email.

Electropedia - www.electropedia.org
The world's leading online dictionary of electronic and electrical terms containing 21 000 terms and definitions in English and French, with equivalent terms in 16 additional languages. Also known as the International Electrotechnical Vocabulary (IEV) online.

IEC Glossary - std.iec.ch/glossary
67 000 electrotechnical terminology entries in English and French extracted from the Terms and Definitions clause of IEC publications issued since 2002. Some entries have been collected from earlier publications of IEC TC 37, 77, 86 and CISPR.

IEC Customer Service Centre - webstore.iec.ch/csc
If you wish to give us your feedback on this publication or need further assistance, please contact the Customer Service Centre: sales@iec.ch.

iTeh STANDARD PREVIEW
(standards.iteh.ai)
IEC 62106-5:2018
https://standards.iteh.ai/catalog/standards/sist/a4e5a8c8-8d70887beb06/iec-62106-5-2018

IEC 62106-1

Edition 1.0 2018-10

INTERNATIONAL STANDARD

Radio data system (RDS) – VHF/FM sound broadcasting in the frequency range from 64,0 MHz to 108,0 MHz –
Part 1: Modulation characteristics and baseband coding

iTeh STANDARD PREVIEW
(standards.iteh.ai)
IEC 62106-1:2018
https://standards.iteh.ai/catalog/standards/sist/5d090a97-93b6-4b5f-b69a-8d70887beb06/iec-62106-1-2018

INTERNATIONAL ELECTROTECHNICAL COMMISSION

ICS 33.160.40

ISBN 978-2-8322-6066-1

Warning! Make sure that you obtained this publication from an authorized distributor.

® Registered trademark of the International Electrotechnical Commission

CONTENTS

FOREWORD 4
INTRODUCTION 6
1 Scope 7
2 Normative references 7
3 Terms, definitions and abbreviated terms 7
3.1 Terms and definitions 7
3.2 Abbreviated terms 8
3.3 Notation and conventions 8
3.3.1 Hexadecimal notation 8
3.3.2 Nomenclature for group types 8
3.3.3 Capitalized RDS terms 8
4 Modulation characteristics of the data channels 8
4.1 General 8
4.2 Subcarrier generation 9
4.3 Data-stream subcarrier frequencies for all possible streams 10
4.4 Subcarrier phase requirements 11
4.5 Subcarrier level requirements 11
4.6 Data-stream modulation requirements 11
4.7 Clock-frequency and data-rate 11
4.8 Differential coding on all data-streams 11
4.9 Data-channel spectrum shaping on all data-streams 12
4.10 Symbol phase shifts of data across data-streams 15
5 Baseband coding 16
5.1 Data-stream baseband coding structure 16
5.2 Data-stream error protection 16
5.3 Synchronization of blocks and groups across all streams 17
6 Transmission options on data-streams 1, 2 and 3 18
Annex A (normative) Offset words to be used for group and block synchronization 19
Annex B (informative) Theory and implementation of the modified shortened cyclic code 20
B.1 General 20
B.2 Encoding procedure 20
B.2.1 Theory 20
B.2.2 Shift-register implementation of the encoder 22
B.3 Decoding procedure 23
B.3.1 Theory 23
B.3.2 Implementation of the decoder 24
Annex C (informative) Implementation of group and block synchronization using the modified shortened cyclic code 26
C.1 Theory 26
C.1.1 Acquisition of group and block synchronization 26
C.1.2 Detection of loss of synchronization 26
C.2 Shift register arrangement for deriving group and block synchronization information 26
Bibliography 29

iTeh STANDARD PREVIEW
(standards.iteh.ai)
IEC 62106-1:2018
https://standards.iteh.ai/catalog/standards/sist/5d090a97-93b6-4b5f-b69a-8d70887beb06/iec-62106-1-2018

Figure 1 – Block diagram of data-stream 0 radio-data equipment at the transmitter 9
Figure 2 – Block diagram of a typical data-stream 0 radio-data receiver/decoder 10
Figure 3 – Subcarriers for RDS data-stream 0 and additional RDS2 data-streams 1, 2 and 3 10
Figure 4 – Amplitude response of the specified transmitter or receiver data-shaping filter 13
Figure 5 – Amplitude response of the combined transmitter and receiver data-shaping filters 14
Figure 6 – Spectrum of biphase coded radio-data signals 14
Figure 7 – Time-function of a single biphase symbol 15
Figure 8 – 57 kHz modulated data-signal 15
Figure 9 – Structure of the baseband coding 16
Figure B.1 – Generator matrix of the basic shortened cyclic code in binary notation 21
Figure B.2 – Shift-register implementation of the encoder 22
Figure B.3 – Parity-check matrix of the basic shortened cyclic code 24
Figure B.4 – Shift-register implementation of the decoder 25
Figure C.1 – Group and block synchronization detection circuit 27

Table 1 – Encoding rules 12
Table 2 – Decoding rules 12
Table 3 – Phase shifts of data across data-streams 1-3 with respect to data-stream 0 16
Table A.1 – Offset word codes 19
Table B.1 – Offset word syndromes using matrix of Figure B.3 24
Table C.1 – Offset word syndromes for group and block synchronization 28

iTeh STANDARD PREVIEW
(standards.iteh.ai)
IEC 62106-1:2018
https://standards.iteh.ai/catalog/standards/sist/[illegible]-8d70887beb06/iec-62106-1-2018

INTERNATIONAL ELECTROTECHNICAL COMMISSION

_____

RADIO DATA SYSTEM (RDS) – VHF/FM SOUND BROADCASTING IN THE FREQUENCY RANGE FROM 64,0 MHz TO 108,0 MHz –

Part 1: Modulation characteristics and baseband coding

FOREWORD

1) The International Electrotechnical Commission (IEC) is a worldwide organization for standardization comprising all national electrotechnical committees (IEC National Committees). The object of IEC is to promote international co-operation on all questions concerning standardization in the electrical and electronic fields. To this end and in addition to other activities, IEC publishes International Standards, Technical Specifications, Technical Reports, Publicly Available Specifications (PAS) and Guides (hereafter referred to as "IEC Publication(s)"). Their preparation is entrusted to technical committees; any IEC National Committee interested in the subject dealt with may participate in this preparatory work. International, governmental and non-governmental organizations liaising with the IEC also participate in this preparation. IEC collaborates closely with the International Organization for Standardization (ISO) in accordance with conditions determined by agreement between the two organizations.
2) The formal decisions or agreements of IEC on technical matters express, as nearly as possible, an international consensus of opinion on the relevant subjects since each technical committee has representation from all interested IEC National Committees.
3) IEC Publications have the form of recommendations for international use and are accepted by IEC National Committees in that sense. While all reasonable efforts are made to ensure that the technical content of IEC Publications is accurate, IEC cannot be held responsible for the way in which they are used or for any misinterpretation by any end user.
4) In order to promote international uniformity, IEC National Committees undertake to apply IEC Publications transparently to the maximum extent possible in their national and regional publications. Any divergence between any IEC Publication and the corresponding national or regional publication shall be clearly indicated in the latter.
5) IEC itself does not provide any attestation of conformity. Independent certification bodies provide conformity assessment services and, in some areas, access to IEC marks of conformity. IEC is not responsible for any services carried out by independent certification bodies.
6) All users should ensure that they have the latest edition of this publication.
7) No liability shall attach to IEC or its directors, employees, servants or agents including individual experts and members of its technical committees and IEC National Committees for any personal injury, property damage or other damage of any nature whatsoever, whether direct or indirect, or for costs (including legal fees) and expenses arising out of the publication, use of, or reliance upon, this IEC Publication or any other IEC Publications.
8) Attention is drawn to the Normative references cited in this publication. Use of the referenced publications is indispensable for the correct application of this publication.
9) Attention is drawn to the possibility that some of the elements of this IEC Publication may be the subject of patent rights. IEC shall not be held responsible for identifying any or all such patent rights.

iTeh STANDARD PREVIEW
(standards.iteh.ai)
IEC 62106-1:2018
https://standards.iteh.ai/catalog/standards/sist/5000a923-92b6-4b5f-b60a-
c0f7e5f2c0ba/iec-62106-1-2018

International Standard IEC 62106-1 has been prepared by technical area 1: Terminals for audio, video and data services and contents, of IEC technical committee 100: Audio, video and multimedia systems and equipment.

This first edition, together with IEC 62106-2, IEC 62106-3, IEC 62106-4, IEC 62106-5 and IEC 62106-6, cancels and replaces IEC 62106:2015, and constitutes a technical revision.

This edition includes the following significant technical changes with respect to IEC 62106:2015:

- Provision has been made to carry RDS on multiple data-streams (RDS2).

The text of this International Standard is based on the following documents:

CDV	Report on voting
100/2907/CDV	100/3055/RVC

Full information on the voting for the approval of this International Standard can be found in the report on voting indicated in the above table.

This document has been drafted in accordance with the ISO/IEC Directives, Part 2.

A list of all parts in the IEC 62106 series, published under the general title *Radio data system (RDS) – VHF/FM sound broadcasting in the frequency range from 64,0 MHz to 108,0 MHz*, can be found on the IEC website.

The committee has decided that the contents of this document will remain unchanged until the stability date indicated on the IEC website under "http://webstore.iec.ch" in the data related to the specific document. At this date, the document will be

- reconfirmed,
- withdrawn,
- replaced by a revised edition, or
- amended.

iTeh STANDARD PREVIEW

A bilingual version of this publication may be issued at a later date.

(standards.iteh.ai)

IEC 62106-1:2018
https://standards.iteh.ai/catalog/standards/sist/5d090a97-93b6-4b5f-b69a-8d70887beb06/iec-62106-1-2018

INTRODUCTION

Since the mid-1980s a fascinating development has taken place. Most of the multimedia applications and standards have been created or redefined significantly. Hardware has become extremely powerful with dedicated software and middleware. In the mid-1980s, Internet as well as its protocols did not exist. Navigation systems became affordable in the late 1990s, and a full range of attractive smartphones now exist. The computing power of all these new products is comparable with that of the mainframe installations in that era.

Listener expectations have grown faster than the technology. Visual experience is now very important, like the Internet look and feel. Scrolling text or delivering just audio is nowadays perceived as insufficient for FM radio, specifically for smartphone users. New types of radio receivers with added value features are therefore required. RDS has so far proven to be very successful.

FM radio with RDS is an analogue-digital hybrid system, which is still a valid data transmission technology and only the applications need adaptation. Now the time has come to solve the only disadvantage, the lack of sufficient data capacity. With RDS2, the need to increase the data capacity can be fulfilled.

RDS was introduced in the early 1980s. During the introductory phase in Europe, the car industry became very involved and that was the start of an extremely successful roll-out. Shortly afterwards, RDS (RBDS) was launched in the USA [1, 2, 3, 4, 5].[1]

The RDS Forum has investigated a solution to the issue of limited data capacity. For RDS2, both sidebands around the RDS 57 kHz subcarrier can be repeated a few times, up to three, centred on additional subcarriers higher up in the FM multiplex still remaining compatible with the ITU Recommendations.

iTeh STANDARD PREVIEW
(standards.iteh.ai)

The core elements of RDS2 are the additional subcarriers, which will enable a significant increase of RDS data capacity to be achieved, and then only new additional data applications will have to be created, using the RDS-ODA feature, which has been part of the RDS standard IEC 62106 for many years.

IEC 62106-1:2018
https://standards.iteh.ai/catalog/standards/sist/3d090a97-93b6-4b31-b69a-8d70887beb06/iec-62106-1-2018

In order to update IEC 62106:2015 to the specifications of RDS2, IEC 62106 has been restructured as follows:

Part 1: Modulation characteristics and baseband coding

Part 2: RDS message format, coding and definition of RDS features

Part 3: Usage and registration of Open Data Applications ODAs

Part 4: Registered code tables

Part 5: Marking of RDS and RDS2 devices

Part 6: Compilation of technical specifications for Open Data Applications in the public domain

The following future parts are planned:

Part 7: RBDS

Part 8: Universal Encoder Communication Protocol UECP

The original specifications of the RDS system have been maintained and the extra functionalities of RDS2 have been added.

Obsolete or unused functions from the original RDS standard IEC 62106:2015 have been deleted. The presentation in Parts 1, 2 and 3 follows the OSI basic reference model for information processing systems [6].

---

1 Numbers in square brackets refer to the Bibliography.

RADIO DATA SYSTEM (RDS) – VHF/FM SOUND BROADCASTING IN THE FREQUENCY RANGE FROM 64,0 MHz TO 108,0 MHz –

Part 1: Modulation characteristics and baseband coding

1 Scope

This part of IEC 62106 defines the basic layer of the Radio Data System (RDS) intended for application to VHF/FM sound broadcasts in the range 64,0 MHz to 108,0 MHz, which can carry either stereophonic (pilot-tone system) or monophonic programmes (as stated in ITU-R Recommendation BS.450-3 and ITU-R Recommendation BS.643-3).

2 Normative references

The following documents are referred to in the text in such a way that some or all of their content constitutes requirements of this document. For dated references, only the edition cited applies. For undated references, the latest edition of the referenced document (including any amendments) applies.

iTeh STANDARD PREVIEW
(standards.iteh.ai)

IEC 62106 (all parts), *Radio Data System (RDS) – VHF/FM sound broadcasting in the frequency range from 64,0 MHz to 108,0 MHz*

ITU-R Recommendation BS.450-3, *Transmission standards for FM sound broadcasting at VHF*

ISO/IEC 62106-1:2018
https://standards.iteh.ai/catalog/standards/sist/5d090a97-93b6-4b5f-b69a-8d70887beb06/iec-62106-1-2018

ITU-R Recommendation BS.643-3, *Radio data system for automatic tuning and other applications in FM radio receivers for use with pilot-tone system*

3 Terms, definitions and abbreviated terms

3.1 Terms and definitions

For the purposes of this document, the following terms and definitions apply.

ISO and IEC maintain terminological databases for use in standardization at the following addresses:

- IEC Electropedia: available at http://www.electropedia.org/
- ISO Online browsing platform: available at http://www.iso.org/obp

3.1.1
data-stream
data modulated on any RDS subcarrier

3.2 Abbreviated terms

AM Amplitude Modulation

FM Frequency Modulation

MF Medium wave broadcasting Frequency band

NOTE 1 MF applies to ITU, all Regions.

LF Long wave broadcasting Frequency band

NOTE 2 LF applies to ITU, Region 1 only.

VHF Very High Frequency broadcasting band

NOTE 3 VHF applies only to ITU.

RDS Radio Data System

NOTE 4 RDS is the generic term for Radio Data System. It designates also the legacy RDS system of all previous editions of IEC 62106, but it uses only the basic stream 0 on subcarrier 57 kHz.

RDS2 Radio Data System 2

NOTE 5 RDS2 is the generic term for Radio Data System 2. It designates Radio Data System comprising data-stream 0 on a 57 kHz subcarrier and one or more additional data-streams (1, 2, 3) on higher frequency subcarriers.

RBDS Radio Broadcast Data System

NOTE 6 RBDS is a variant of RDS, see [5].

iTeh STANDARD PREVIEW
(standards.iteh.ai)

3.3 Notation and conventions

3.3.1 Hexadecimal notation

IEC 62106-1:2018
https://standards.iteh.ai/catalog/standards/sist/5d090a97-93b6-4b5f-b69a-8d70887beb06/iec-62106-1-2018

C notation “0x” designates hex (base 16) numbers.

NOTE This notation is used throughout this standard.

3.3.2 Nomenclature for group types

Group types A and B are referenced by a number 0…15 and a version A or B. Group type C is referenced by a header byte and 7 data bytes

3.3.3 Capitalized RDS terms

To align with general usage, some technical terms are capitalized throughout the IEC 62106 series, such as "Radio Data System" and "Radio Broadcast Data System".

4 Modulation characteristics of the data channels

4.1 General

The Radio Data System is intended for application to VHF/FM sound broadcasting transmitters in the range from 64,0 MHz to 108,0 MHz, which carry stereophonic (pilot-tone system) or monophonic sound broadcasts specified in ITU-R Recommendation BS.450-3.

The data-streams are carried on up to four subcarriers, which are added to the stereo multiplex signal (or monophonic signal, as appropriate) at the input of the VHF/FM transmitter. Block diagrams of the data source equipment at the transmitter and a typical receiver arrangement are shown for RDS in Figure 1 and Figure 2, respectively.

4.2 Subcarrier generation

During stereo broadcasts, the subcarrier frequencies are derived from and phase-locked to the 19 kHz pilot-tone. The tolerance of the subcarriers is directly related to the tolerance of the 19 kHz pilot-tone, which is ± 2 Hz (ITU-R Recommendation BS.450-3).

During monophonic broadcasts, the frequency of the data-stream 0 subcarrier is 57 kHz ± 6 Hz. RDS2 data-stream 1, 2 and 3 subcarriers are locked to the data-stream 0 subcarrier.

Data-stream 0 subcarrier is required for RDS and RDS2 while data-stream 1, 2 and 3 subcarriers are optional and are only applicable to RDS2.

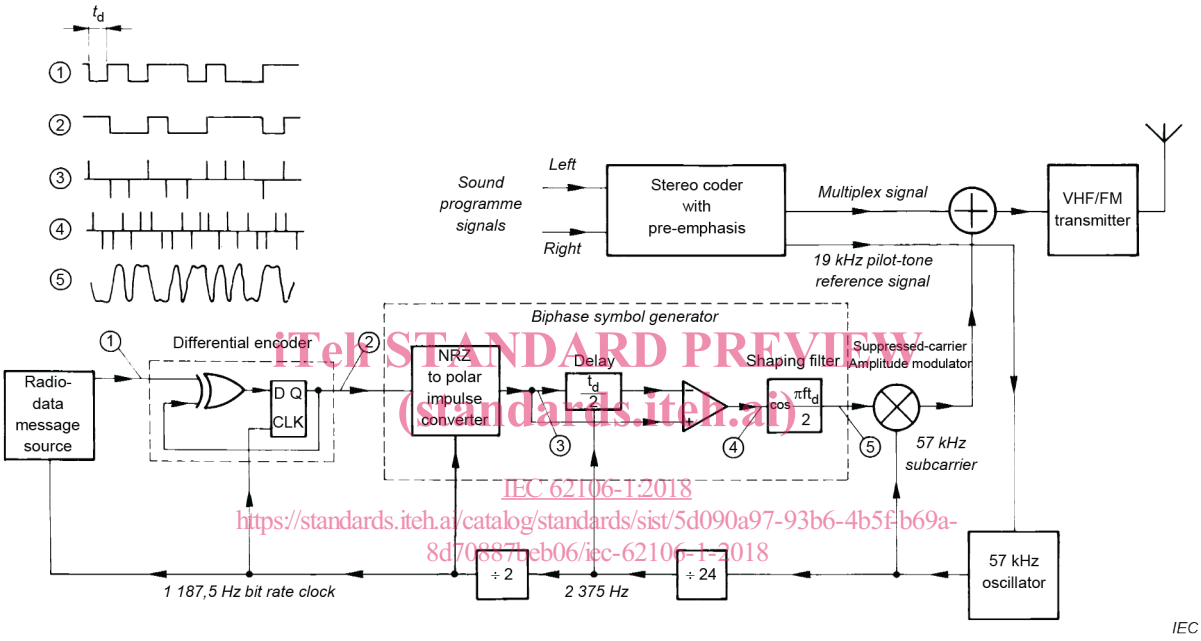

iTeh STANDARD PREVIEW
(standards.iteh.ai)
IEC 62106-1:2018
https://standards.iteh.ai/catalog/standards/sist/5d090a97-93b6-4b5f-b69a-8d70887beb06/iec-62106-1-2018

Figure 1 – Block diagram of data-stream 0 radio-data equipment at the transmitter

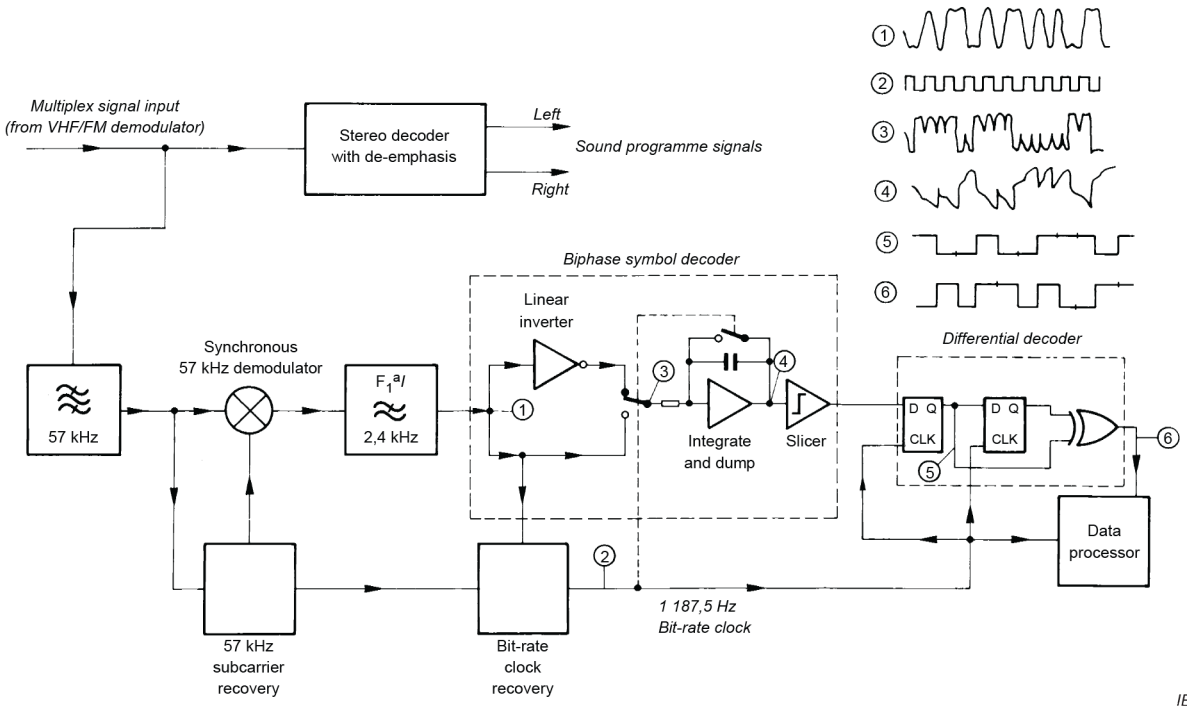

[a] The overall data-shaping in this decoder comprises the filter F1 and the data-shaping inherent in the biphase symbol decoder. The amplitude/frequency characteristic of filter F1 is therefore not the same as that given in Figure 4.

iTeh STANDARD PREVIEW
(standards.iteh.ai)

Figure 2 – Block diagram of a typical data-stream 0 radio-data receiver/decoder

4.3 Data-stream subcarrier frequencies for all possible streams

IEC 62106-1:2018
https://standards.iteh.ai/catalog/standards/sist/5d090a97-93b6-4b5f-b69a-8d7088f9ab06/iec-62106-1-2018

The data-stream subcarriers are as in Figure 3.

Data-stream 0: 57,0 kHz (3 × pilot-tone)

Data-stream 1: 66,5 kHz

Data-stream 2: 71,25 kHz

Data-stream 3: 76,0 kHz (4 × pilot-tone)

The theoretically possible 61,75 kHz data-stream subcarrier is not used.

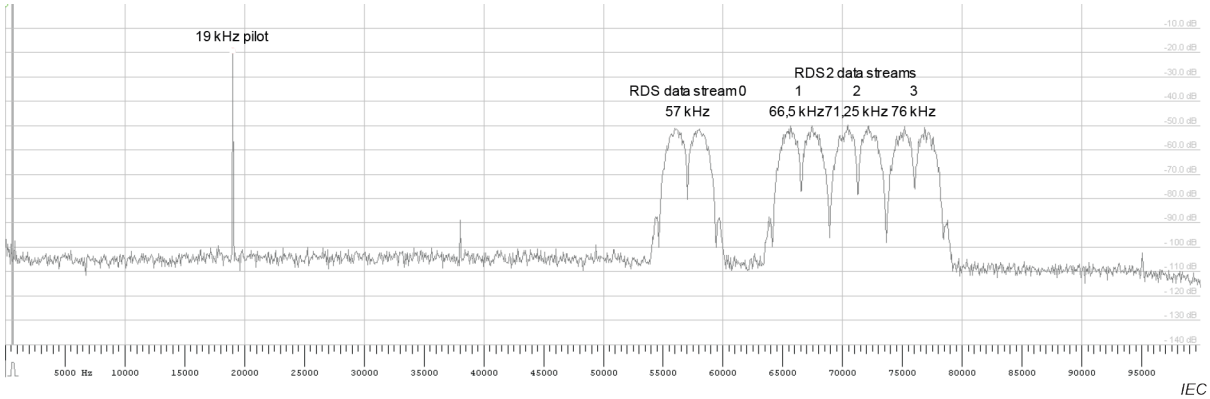

Figure 3 – Subcarriers for RDS data-stream 0 and additional RDS2 data-streams 1, 2 and 3