IEC 60372

Edition 4.0 2020-07

INTERNATIONAL STANDARD

NORME INTERNATIONALE

Locking devices for ball and socket couplings of string insulator units – Dimensions and tests

iTeh STANDARD PREVIEW
(standards.iteh.ai)

Dispositifs de verrouillage pour les assemblages à rotule et logement de rotule des éléments de chaînes d'isolateurs – Dimensions et essais

IEC 60372:2020
https://standards.iteh.ai/catalog/standards/sist/37701954-cd4a-4474-93df-9365f99d4459/iec-60372-2020

IEC 60372:2020-07(en-fr)

THIS PUBLICATION IS COPYRIGHT PROTECTED
Copyright © 2020 IEC, Geneva, Switzerland

All rights reserved. Unless otherwise specified, no part of this publication may be reproduced or utilized in any form or by any means, electronic or mechanical, including photocopying and microfilm, without permission in writing from either IEC or IEC's member National Committee in the country of the requester. If you have any questions about IEC copyright or have an enquiry about obtaining additional rights to this publication, please contact the address below or your local IEC member National Committee for further information.

Droits de reproduction réservés. Sauf indication contraire, aucune partie de cette publication ne peut être reproduite ni utilisée sous quelque forme que ce soit et par aucun procédé, électronique ou mécanique, y compris la photocopie et les microfilms, sans l'accord écrit de l'IEC ou du Comité national de l'IEC du pays du demandeur. Si vous avez des questions sur le copyright de l'IEC ou si vous désirez obtenir des droits supplémentaires sur cette publication, utilisez les coordonnées ci-après ou contactez le Comité national de l'IEC de votre pays de résidence.

IEC Central Office
3, rue de Varembé
CH-1211 Geneva 20
Switzerland

Tel.: +41 22 919 02 11
info@iec.ch
www.iec.ch

About the IEC
The International Electrotechnical Commission (IEC) is the leading global organization that prepares and publishes International Standards for all electrical, electronic and related technologies.

About IEC publications
The technical content of IEC publications is kept under constant review by the IEC. Please make sure that you have the latest edition, a corrigendum or an amendment might have been published.

IEC publications search - webstore.iec.ch/advsearchform
The advanced search enables to find IEC publications by a variety of criteria (reference number, text, technical committee,…). It also gives information on projects, replaced and withdrawn publications.

IEC Just Published - webstore.iec.ch/justpublished
Stay up to date on all new IEC publications. Just Published details all new publications released. Available online and once a month by email.

IEC Customer Service Centre - webstore.iec.ch/csc
If you wish to give us your feedback on this publication or need further assistance, please contact the Customer Service Centre: sales@iec.ch.

Electropedia - www.electropedia.org
The world's leading online dictionary on electrotechnology, containing more than 22 000 terminological entries in English and French, with equivalent terms in 16 additional languages. Also known as the International Electrotechnical Vocabulary (IEV) online.

IEC Glossary - std.iec.ch/glossary
67 000 electrotechnical terminology entries in English and French extracted from the Terms and Definitions clause of IEC publications issued since 2002. Some entries have been collected from earlier publications of IEC TC 37, 77, 86 and CISPR.

iTeh STANDARD PREVIEW
(standards.iteh.ai)
IEC 60372:2020
https://standards.iteh.ai/catalog/standards/sist/37c01934-c04a-4474-9305-9365f99d4459/iec-60372-2020

A propos de l'IEC
La Commission Electrotechnique Internationale (IEC) est la première organisation mondiale qui élabore et publie des Normes internationales pour tout ce qui a trait à l'électricité, à l'électronique et aux technologies apparentées.

A propos des publications IEC
Le contenu technique des publications IEC est constamment revu. Veuillez vous assurer que vous possédez l'édition la plus récente, un corrigendum ou amendement peut avoir été publié.

Recherche de publications IEC - webstore.iec.ch/advsearchform
La recherche avancée permet de trouver des publications IEC en utilisant différents critères (numéro de référence, texte, comité d'études,…). Elle donne aussi des informations sur les projets et les publications remplacées ou retirées.

IEC Just Published - webstore.iec.ch/justpublished
Restez informé sur les nouvelles publications IEC. Just Published détaille les nouvelles publications parues. Disponible en ligne et une fois par mois par email.

Service Clients - webstore.iec.ch/csc
Si vous désirez nous donner des commentaires sur cette publication ou si vous avez des questions contactez-nous: sales@iec.ch.

Electropedia - www.electropedia.org
Le premier dictionnaire d'électrotechnologie en ligne au monde, avec plus de 22 000 articles terminologiques en anglais et en français, ainsi que les termes équivalents dans 16 langues additionnelles. Egalement appelé Vocabulaire Electrotechnique International (IEV) en ligne.

Glossaire IEC - std.iec.ch/glossary
67 000 entrées terminologiques électrotechniques, en anglais et en français, extraites des articles Termes et Définitions des publications IEC parues depuis 2002. Plus certaines entrées antérieures extraites des publications des CE 37, 77, 86 et CISPR de l'IEC.

IEC 60372

Edition 4.0 2020-07

INTERNATIONAL STANDARD

NORME INTERNATIONALE

Locking devices for ball and socket couplings of string insulator units – Dimensions and tests

iTeh STANDARD PREVIEW
(standards.iteh.ai)

Dispositifs de verrouillage pour les assemblages à rotule et logement de rotule des éléments de chaînes d'isolateurs – Dimensions et essais

IEC 60372:2020
https://standards.iteh.ai/catalog/standards/iec/1a1a1a1a-1a1a-1a1a-1a1a-1a1a1a1a1a1a/iec-60372-2020

INTERNATIONAL
ELECTROTECHNICAL
COMMISSION

COMMISSION
ELECTROTECHNIQUE
INTERNATIONALE

ICS 29.080.10; 29.240.20

ISBN 978-2-8322-8477-3

Warning! Make sure that you obtained this publication from an authorized distributor.
Attention! Veuillez vous assurer que vous avez obtenu cette publication via un distributeur agréé.

® Registered trademark of the International Electrotechnical Commission
Marque déposée de la Commission Electrotechnique Internationale

CONTENTS

FOREWORD 4
1 Scope 6
2 Normative references 6
3 Terms and definitions 6
4 Shapes and dimensions 7
4.1 General 7
4.2 Shapes of the locking devices 7
4.2.1 Split-pin 7
4.2.2 W-clip 7
4.3 Dimensions of locking devices 7
4.3.1 The split-pins (standard and alternative type) 7
4.3.2 The W-clips 8
5 Test 9
5.1 Classification of tests 9
5.2 Qualification tests 10
5.2.1 Test items and the samples 10
5.2.2 Hardness test 10
5.2.3 Verification of resistance of bending 10
5.2.4 Corrosion resistance test 11
5.3 Sample tests and sampling 12
5.3.1 Sample tests 12
5.3.2 Sampling 12
5.3.3 Visual examination 13
5.3.4 Verification of dimensions 13
5.3.5 Hardness test 14
5.3.6 Verification of resistance to bending (for split-pins only) 14
5.4 Re-test procedure 14
Annex A (normative) Gauge for W-clips 15
Annex B (normative) Other dimensions of split-pins 17
Annex C (informative) Method of using the locking devices 18
C.1 Overview 18
C.2 Method of using the locking devices – Split-pin 18
C.3 Method of using the locking devices – W-clip 18
Bibliography 19

Figure 1 – Shape of split-pins 8
Figure 2 – Shape of W-clips 9
Figure 3 – Arrangement of verification of resistance of bending 11
Figure 4 – Verification of L 13
Figure A.1 – Gauge for W-clips 15
Figure A.2 – Symbol marks for dimensions of W-clips 16
Figure B.1 – Other dimensions of the split-pins 17
Figure C.1 – Positions of split-pin 18
Figure C.2 – Positions of W-clip 18

iTeh STANDARD PREVIEW
(standards.iteh.ai)
IEC 60372:2020
https://standards.iteh.ai/catalog/standards/sist/37701954-cd4a-4474-93df-9365f99d4459/iec-60372-2020

Table 1 – Dimensions of the split-pins 8
Table 2 – Dimensions of W-clips 9
Table 3 – Radii of verification of resistance of bending 11
Table 4 – Size of the sample and acceptance number Ac 12
Table 5 – Specifications of K and D_4 in Figure 4 13
Table A.1 – Dimensions of the gauge for W-clips 16
Table B.1 – Other dimensions of the split-pins 17

iTeh STANDARD PREVIEW
(standards.iteh.ai)
IEC 60372:2020
https://standards.iteh.ai/catalog/standards/sist/37701954-cd4a-4474-93df-9365f99d4459/iec-60372-2020

INTERNATIONAL ELECTROTECHNICAL COMMISSION

LOCKING DEVICES FOR BALL AND SOCKET COUPLINGS OF STRING INSULATOR UNITS – DIMENSIONS AND TESTS

FOREWORD

1) The International Electrotechnical Commission (IEC) is a worldwide organization for standardization comprising all national electrotechnical committees (IEC National Committees). The object of IEC is to promote international co-operation on all questions concerning standardization in the electrical and electronic fields. To this end and in addition to other activities, IEC publishes International Standards, Technical Specifications, Technical Reports, Publicly Available Specifications (PAS) and Guides (hereafter referred to as "IEC Publication(s)"). Their preparation is entrusted to technical committees; any IEC National Committee interested in the subject dealt with may participate in this preparatory work. International, governmental and non-governmental organizations liaising with the IEC also participate in this preparation. IEC collaborates closely with the International Organization for Standardization (ISO) in accordance with conditions determined by agreement between the two organizations.

2) The formal decisions or agreements of IEC on technical matters express, as nearly as possible, an international consensus of opinion on the relevant subjects since each technical committee has representation from all interested IEC National Committees.

3) IEC Publications have the form of recommendations for international use and are accepted by IEC National Committees in that sense. While all reasonable efforts are made to ensure that the technical content of IEC Publications is accurate, IEC cannot be held responsible for the way in which they are used or for any misinterpretation by any end-user.

iTeh STANDARD PREVIEW
(standards.iteh.ai)

4) In order to promote international uniformity, IEC National Committees undertake to apply IEC Publications transparently to the maximum extent possible in their national and regional publications. Any divergence between any IEC Publication and the corresponding national or regional publication shall be clearly indicated in the latter.

5) IEC itself does not provide any attestation of conformity. Independent certification bodies provide conformity assessment services and, in some areas, access to IEC marks of conformity. IEC is not responsible for any services carried out by independent certification bodies.

IEC 60372:2020
https://standards.iteh.ai/catalog/standards/sist/57701994-ed4a-4474-93df-9365f99d4459/iec-60372-2020

6) All users should ensure that they have the latest edition of this publication.

7) No liability shall attach to IEC or its directors, employees, servants or agents including individual experts and members of its technical committees and IEC National Committees for any personal injury, property damage or other damage of any nature whatsoever, whether direct or indirect, or for costs (including legal fees) and expenses arising out of the publication, use of, or reliance upon, this IEC Publication or any other IEC Publications.

8) Attention is drawn to the Normative references cited in this publication. Use of the referenced publications is indispensable for the correct application of this publication.

9) Attention is drawn to the possibility that some of the elements of this IEC Publication may be the subject of patent rights. IEC shall not be held responsible for identifying any or all such patent rights.

International Standard IEC 60372 has been prepared by IEC technical committee 36: Insulators.

This fourth edition cancels and replaces the third edition published in 1984. This edition constitutes a technical revision.

This edition includes the following significant technical changes with respect to the previous edition:

a) Two new designated size of couplings, 36 and 40, were introduced;

b) According to the results of the questionnaire (36/424/Q), the relevant content of the 28B W-clip was deleted;

c) Annex A is informative, Annex B is normative, Annex C is informative.

The text of this International Standard is based on the following documents:

FDIS	Report on voting
36/485/FDIS	36/493/RVD

Full information on the voting for the approval of this International Standard can be found in the report on voting indicated in the above table.

This document has been drafted in accordance with the ISO/IEC Directives, Part 2.

The committee has decided that the contents of this document will remain unchanged until the stability date indicated on the IEC website under "http://webstore.iec.ch" in the data related to the specific document. At this date, the document will be

- reconfirmed,
- withdrawn,
- replaced by a revised edition, or
- amended.

iTeh STANDARD PREVIEW
(standards.iteh.ai)

IEC 60372:2020
https://standards.iteh.ai/catalog/standards/sist/37701954-cd4a-4474-93df-9365f99d4459/iec-60372-2020

LOCKING DEVICES FOR BALL AND SOCKET COUPLINGS OF STRING INSULATOR UNITS – DIMENSIONS AND TESTS

1 Scope

This international standard is applicable to locking devices used with ball and socket couplings of string insulator units and used with the corresponding metal fittings standardized in IEC 60120, when they are supplied separately.

When these locking devices are supplied with an insulator or fitting, they are considered as an integral part of it. In this case, the relevant test is to be included with those of insulators, as specified in IEC 60383-1 and IEC 61325. On request, a certificate is to be delivered confirming that the tests on locking devices as specified in this document have been carried out. The locking devices are usually supplied with the insulator or corresponding metal fittings.

The object of this document is

- to define the shapes and some standard dimensions for locking devices,
- to define the test methods for locking devices,
- to state the acceptance conditions for supply,
- to give other dimensions for guidance of manufacturing only.

iTeh STANDARD PREVIEW
(standards.iteh.ai)

The object of this document does not include the specification of the nature of the material, and the material covered by the scope of this document does not have a surface coating for corrosion protection. However, the material which will give rise to significant contact corrosion(chemical reaction) between the locking device and the ball and socket coupling does not covered by this document.

IEC 60372:2020
https://standards.iteh.ai/catalog/standards/sist/37701954-cd4a-4474-95df-9365f99d4459/iec-60372-2020

2 Normative references

The following documents are referred to in the text in such a way that some or all of their content constitutes requirements of this document. For dated references, only the edition cited applies. For undated references, the latest edition of the referenced document (including any amendments) applies.

IEC 60050-471, *International Electrotechnical Vocabulary (IEV) – Part 471: Insulators*

ISO 6506-1, *Metallic materials – Brinell Hardness – Test Part 1: Test Method*

ISO 6507-1, *Metallic materials – Vickers Hardness – Test Part 1: Test Method*

ISO 6508-1, *Metallic materials – Rockwell Hardness – Test Part 1: Test Method*

3 Terms and definitions

For the purposes of this document, the terms and definitions of IEC 60050-471 and the following apply.

ISO and IEC maintain terminological databases for use in standardization at the following addresses:

- IEC Electropedia: available at http://www.electropedia.org/
- ISO Online browsing platform: available at http://www.iso.org/obp

3.1
locking device (for ball and socket coupling)
component which prevents pin ball decoupling from socket, when it is in locking position, by using its shape and material properties

Note 1 to entry: See schematic of locking position in Annex C.

4 Shapes and dimensions

4.1 General

Two types of locking devices are standardized, one using a split-pin, the other a W- shaped clip.

The first type requires a circular hole and the second a rectangular hole.

Two split-pins are proposed.

- standard split-pin this split-pin is a tight-fit in the socket-hole,
- alternative split-pin this split-pin is a loose fit in the socket-hole.

iTeh STANDARD PREVIEW
(standards.iteh.ai)

This alternative may be used by agreement between the manufacturer and the purchaser when the problems of stress corrosion are possible for the split-pin metal due to the permanent stress in the tight-fit system, e.g. when certain types of stainless steel are used.

IEC 60372:2020
https://standards.iteh.ai/catalog/standards/sist/257b1054-cd4e-4474-0b35-9365f99d4459/iec-60372-2020

The socket-hole into which the locking device fits is the same for both the standard and alternative split-pin, so it is possible to use the alternative split-pin in a socket designed for the standard split-pin.

4.2 Shapes of the locking devices

4.2.1 Split-pin

One of the legs of the split-pin has a hump and the free ends are bent outwards after insertion into the socket. These features provide two distinct positions for the split-pin when operated for locking and coupling, and complete withdrawal from the socket is effectively prevented (see Annex C).

4.2.2 W-clip

The W-clip is so shaped that it will remain in two distinct positions when operated for coupling and locking. The shape of the W-clip is such that complete withdrawal from the socket when moving from the locking to the coupling position is prevented (see Annex C).

4.3 Dimensions of locking devices

4.3.1 The split-pins (standard and alternative type)

The shape of split-pins is given in Figure 1. The dimensions of split-pins are given in Table 1.

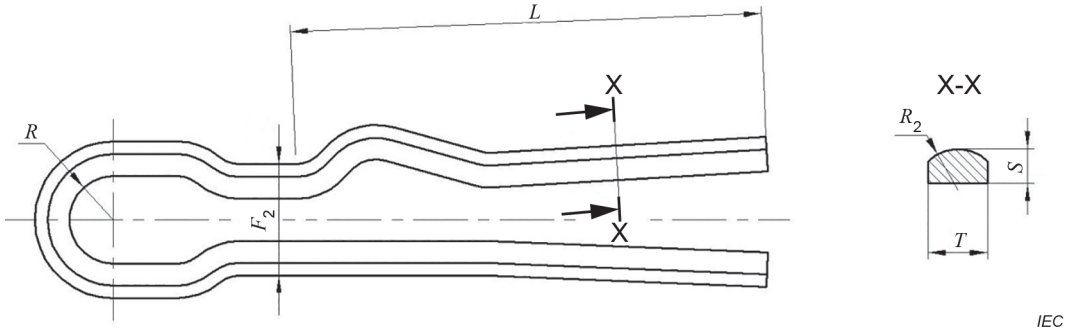

Figure 1 – Shape of split-pins

Table 1 – Dimensions of the split-pins

Dimensions in millimetres

Designated size of coupling		Standard split-pins						Alternative split-pins[a]
		S	T	R_2	F_{2Min}	R_{Min}	L_{Min}	$F'_{2\,Max}$
11		2,2 ± 0,1	$4{,}8^{+0{,}2}_{0}$	3,3	8,2	2,5	29	7,3
16	A[b]	3,2 ± 0,1	$5{,}5^{+0{,}2}_{0}$	3,8	10,3	3,0	43[c]	9,2
	B[b]		$7{,}9^{+0{,}2}_{0}$	4,8	10,7		38	9,7
20		3,2 ± 0,1	$7{,}0^{+0{,}2}_{0}$	4,8	10,7	3,0	49	9,7
24		4,0 ± 0,1	$8{,}7^{+0{,}2}_{0}$	5,7	12,8	3,5	60	11,7
28		4,5 ± 0,1	$10{,}0^{+0{,}2}_{0}$	6,2	13,8	3,5	71	12,7
32		5,2 ± 0,1	$11{,}5^{+0{,}2}_{0}$	7,2	15,8	3,5	81	14,7
36		6,5 ± 0,1	$11{,}5^{+0{,}2}_{0}$	8,7	17,8	4,0	91	16,7
40		6,5 ± 0,1	$11{,}5^{+0{,}2}_{0}$	8,7	17,8	4,0	102	16,7

[a] All the dimensions are the same as for standard split-pins, except the value F_{2Min} replaced by $F'_{2\,Max}$

[b] See Clause 6 of IEC 60120:2020.

[c] Many existing designs of the inside of the socket still prevent uncoupling with lower values of L_{min}. In this case L_{min} can be reduced to 38 mm.

iTeh STANDARD PREVIEW
(standards.iteh.ai)
IEC 60372:2020
https://standards.iteh.ai/catalog/standards/sist/37701954-cd4a-4474-93df-1235499d4458/iec-60372-2020

The dimension L_{max} shall be specified by the purchaser of the split-pin (see 5.3.4.1)

4.3.2 The W-clips

The shape of W-clips is given in Figure 2. The dimensions of W-clips are given in Table 2.

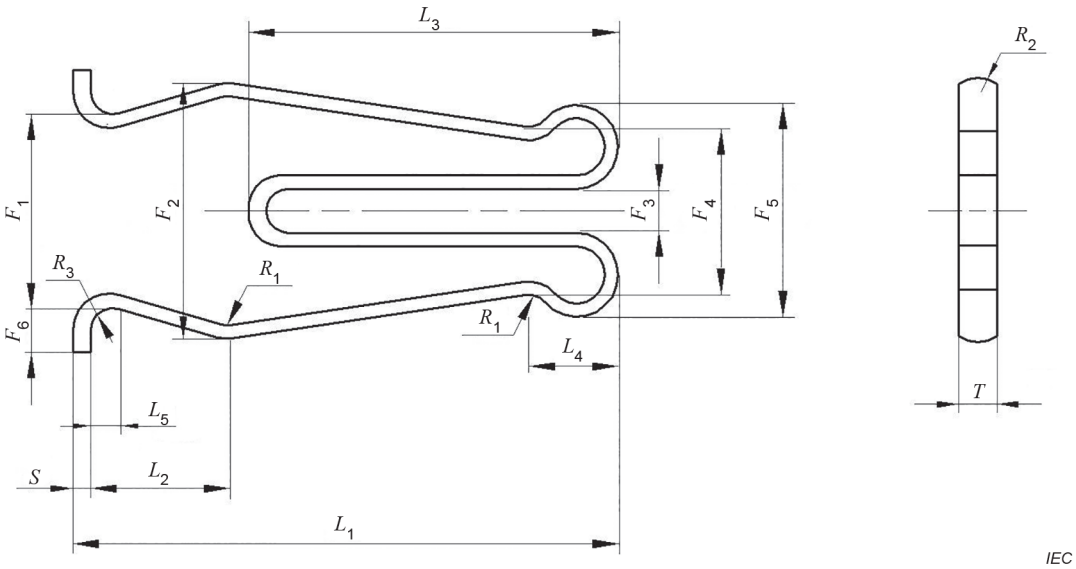

Figure 2 – Shape of W-clips

Table 2 – Dimensions of W-clips

iTeh STANDARD PREVIEW
(standards.iteh.ai)
IEC 60372:2020
https://standards.iteh.ai/catalog/standards/sist/37701954-cd4a-4474-93df-93658994459/iec-60372-2020

Dimensions in millimetres

Designated size of coupling		F_1	F_2	F_3	F_4	F_5	F_6	L_1	L_2	L_3	L_4	L_5	R_1	R_2	$R_{3(max)}$	S	T
11		15	20	4	13	19	$4^{+0,6}_{0}$	37 ± 1,5	12,0	24 ± 1,5	8.0	3	2,5	3,0	1,5	$1,2^{+0,2}_{0}$	$4,8^{+0,2}_{0}$
16	A[a]	22	28	5	19	24	5^{+1}_{0}	50 ± 1,5	15,5	36 ± 1,5	10.5	3	2,5	3,0	2,5	$1,5^{+0,2}_{0}$	$5,5^{+0,2}_{0}$
	B[a]													4,5			$7,9^{+0,2}_{0}$
20		22	30	5	19	24	5^{+1}_{0}	62 ± 1,5	15,5	42 ± 1,5	10.5	3	2,5	4,5	2,5	$2,0^{+0,2}_{0}$	$7,0^{+0,2}_{0}$
24		22	30	5	19	25	5^{+1}_{0}	72 ± 1,5	15,5	50 ± 1,5	10.5	3	2,5	5,0	2,5	$2,0^{+0,2}_{0}$	$8,7^{+0,2}_{0}$
28		24	32	6	21	28	6^{+1}_{0}	83 ± 1,5	16,0	62 ± 1,5	12.5	4	3,0	6,0	3,0	$2,2^{+0,2}_{0}$	$10,0^{+0,2}_{0}$
32		26	36	6	24	33	7^{+1}_{0}	96 ± 1,5	18,0	71 ± 1,5	16.0	4	3,0	7,0	3,0	$2,6^{+0,2}_{0}$	$11,5^{+0,2}_{0}$

[a] See Clause 6 of IEC 60120:2020.

5 Test

5.1 Classification of tests

The tests are divided into two groups:

– Group I qualification tests

The qualification tests are made in order to verify the suitability of the type of material to be used in the manufacture of locking device.

– Group II sample tests

Sample tests are made in order to verify the quality of a manufacture, they are made on samples taken at random from each lot.

5.2 Qualification tests

5.2.1 Test items and the samples

Qualification tests consist of

– hardness test,
– verification of resistance to bending (for split-pins only),
– corrosion resistance test.

They are each made on five samples of material. It shall not be necessary to repeat these tests if a certificate of qualification test is available and if the locking-device manufacturer gives proof that the profiled material used is the same.

5.2.2 Hardness test

The hardness test shall be carried out according to ISO 6507-1:2005 for copper alloy locking devices and for steel locking device. It shall be carried out on one of the flat surfaces of the locking device (the side opposite the rounding in the case of split-pin types). A series of three measurements shall be effected on each locking device.

The average of the three measurements shall be greater than or equal to 150.

Upon agreement between the purchaser and the manufacturer, other methods may be used for measurement of hardness. ISO 6506-1:2014 or ISO 6508-1:2016. In this case, the values shall be agreed.

iTeh STANDARD PREVIEW
(standards.iteh.ai)

5.2.3 Verification of resistance of bending

IEC 60372:2020
https://standards.iteh.ai/catalog/standards/sist/37701934-cd4a-4474-930f-9363b99d4439/iec-60372-2020

The test applies only to split-pin. The test shall be carried out on a piece taken from the straight part of a leg of the split-pin, or on a sample selected from the profiled material from which the pins have been manufactured.

The test consists of bending the test piece around a specified radius, as shown in Figure 3.

One end of the test piece is inserted into a vice, one of the jaws of which is covered with a lining piece made of steel with its surface at about 75° from the vertical position. By means of a wooden mallet, the test piece is bent against the inclined surface.

After this bending, no splits or cracks must appear.

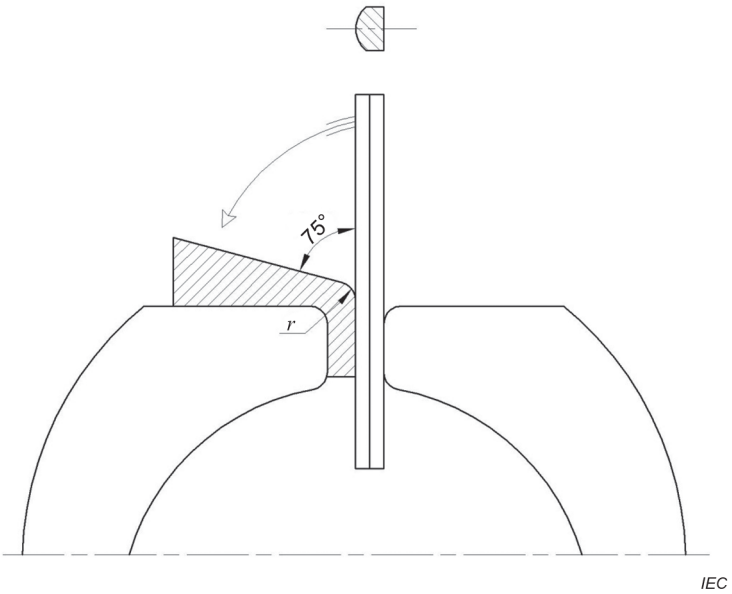

Figure 3 – Arrangement of verification of resistance of bending

Table 3 – Radii of verification of resistance of bending

iTeh STANDARD PREVIEW
(standards.iteh.ai)
IEC 60372:2020
https://standards.iteh.ai/catalog/standards/sist/37701954-cd4a-4474-99df-9365f9934459/iec-60372-2020

Dimensions in millimetres

Designated size of coupling	11	16		20	24	28	32	36	40
		A[a]	B[a]						
r	2	3	4	4	5	6	7	8	8
[a] See Clause 6 of IEC 60120:2020.									

5.2.4 Corrosion resistance test

This test concerns stress corrosion cracking. This corrosion can only appear if there is, simultaneously, a mechanical stress associated with a corrosive atmosphere.

This test concerns neither external corrosion due to corrosive atmospheric conditions nor contact corrosion which can occur between different metals.

The need for a test for resistance to stress corrosion cracking depends on the material used for the manufacture of the locking devices.

For the following materials, no test is required:

– bronze and phosphor-bronze;
– copper alloys with not more than 15 % zinc content having undergone a suitable stabilizing annealing treatment;
– austenitic stainless steels having undergone the standard thermal treatment on the original profiled material.

For other materials, such as other types of stainless steels and copper alloys with more than 15 % zinc content, a suitable test shall be agreed upon in advance by the manufacturer and the purchaser, avoiding, for copper alloys, methods requiring the use of mercury nitrate.