IEC 61169-64

Edition 1.0 2019-09

INTERNATIONAL STANDARD

NORME INTERNATIONALE

Radio-frequency connectors – Part 64: Sectional specification – RF coaxial connectors with 0,8 mm inner diameter of outer conductor – Characteristic impedance 50 Ω (type 0,8)

Connecteurs pour fréquences radioélectriques – Partie 64: Spécification intermédiaire – Connecteurs RF coaxiaux avec un conducteur extérieur disposant d'un diamètre intérieur de 0,8 mm – Impédance caractéristique de 50 Ω (type 0,8)

IEC 61169-64:2019-09(en-fr)

IEC Central Office
3, rue de Varembé
CH-1211 Geneva 20
Switzerland

Tel.: +41 22 919 02 11
info@iec.ch
www.iec.ch

About the IEC
The International Electrotechnical Commission (IEC) is the leading global organization that prepares and publishes International Standards for all electrical, electronic and related technologies.

About IEC publications
The technical content of IEC publications is kept under constant review by the IEC. Please make sure that you have the latest edition, a corrigendum or an amendment might have been published.

IEC publications search - webstore.iec.ch/advsearchform
The advanced search enables to find IEC publications by a variety of criteria (reference number, text, technical committee,…). It also gives information on projects, replaced and withdrawn publications.

IEC Just Published - webstore.iec.ch/justpublished
Stay up to date on all new IEC publications. Just Published details all new publications released. Available online and once a month by email.

IEC Customer Service Centre - webstore.iec.ch/csc
If you wish to give us your feedback on this publication or need further assistance, please contact the Customer Service Centre: sales@iec.ch.

Electropedia - www.electropedia.org
The world's leading online dictionary on electrotechnology, containing more than 22 000 terminological entries in English and French, with equivalent terms in 16 additional languages. Also known as the International Electrotechnical Vocabulary (IEV) online.

IEC Glossary - std.iec.ch/glossary
67 000 electrotechnical terminology entries in English and French extracted from the Terms and Definitions clause of IEC publications issued since 2002. Some entries have been collected from earlier publications of IEC TC 37, 77, 86 and CISPR.

A propos de l'IEC
La Commission Electrotechnique Internationale (IEC) est la première organisation mondiale qui élabore et publie des Normes internationales pour tout ce qui a trait à l'électricité, à l'électronique et aux technologies apparentées.

A propos des publications IEC
Le contenu technique des publications IEC est constamment revu. Veuillez vous assurer que vous possédez l'édition la plus récente, un corrigendum ou amendement peut avoir été publié.

Recherche de publications IEC - webstore.iec.ch/advsearchform
La recherche avancée permet de trouver des publications IEC en utilisant différents critères (numéro de référence, texte, comité d'études,…). Elle donne aussi des informations sur les projets et les publications remplacées ou retirées.

IEC Just Published - webstore.iec.ch/justpublished
Restez informé sur les nouvelles publications IEC. Just Published détaille les nouvelles publications parues. Disponible en ligne et une fois par mois par email.

Service Clients - webstore.iec.ch/csc
Si vous désirez nous donner des commentaires sur cette publication ou si vous avez des questions contactez-nous: sales@iec.ch.

Electropedia - www.electropedia.org
Le premier dictionnaire d'électrotechnologie en ligne au monde, avec plus de 22 000 articles terminologiques en anglais et en français, ainsi que les termes équivalents dans 16 langues additionnelles. Egalement appelé Vocabulaire Electrotechnique International (IEV) en ligne.

Glossaire IEC - std.iec.ch/glossary
67 000 entrées terminologiques électrotechniques, en anglais et en français, extraites des articles Termes et Définitions des publications IEC parues depuis 2002. Plus certaines entrées antérieures extraites des publications des CE 37, 77, 86 et CISPR de l'IEC.

IEC 61169-64

Edition 1.0 2019-09

INTERNATIONAL STANDARD

NORME INTERNATIONALE

Radio-frequency connectors –
Part 64: Sectional specification – RF coaxial connectors with 0,8 mm inner diameter of outer conductor – Characteristic impedance 50 Ω (type 0,8)

Connecteurs pour fréquences radioélectriques –
Partie 64: Spécification intermédiaire – Connecteurs RF coaxiaux avec un conducteur extérieur disposant d'un diamètre intérieur de 0,8 mm – Impédance caractéristique de 50 Ω (type 0,8)

INTERNATIONAL
ELECTROTECHNICAL
COMMISSION

COMMISSION
ELECTROTECHNIQUE
INTERNATIONALE

ICS 33.120.30

ISBN 978-2-8322-7311-1

Warning! Make sure that you obtained this publication from an authorized distributor.
Attention! Veuillez vous assurer que vous avez obtenu cette publication via un distributeur agréé.

CONTENTS

FOREWORD 4
1 Scope 6
2 Normative references 6
3 Terms and definitions 6
4 Mating face and gauge information 7
4.1 Dimensions – General connectors 7
4.1.1 Connector with pin-centre conductor 7
4.1.2 Connector with socket-centre contact 8
4.2 Gauges for general purpose connectors 9
4.2.1 Gauge pins for socket centre contact 9
4.2.2 Test procedure 9
4.3 Dimensions – Standard test connectors – Grade 0 10
4.3.1 Connector with pin-centre contact 10
4.3.2 Connector with socket-centre contact 11
5 Quality assessment procedures 12
5.1 General 12
5.2 Ratings and characteristics (see Clause 5 of IEC 61169-1:2013) 12
5.3 Test schedule and inspection requirements 14
5.3.1 Acceptance tests 14
5.3.2 Periodic tests 14
5.4 Procedures for the quality conformance 15
5.4.1 Quality conformance inspection 15
5.4.2 Qualification approval and its maintenance 16
6 Instructions for preparation of detail specifications 16
6.1 General 16
6.2 Identification of the component 16
6.3 Performances 16
6.4 Marking, ordering information and related matters 16
6.5 Selection of tests, test conditions and severities 17
6.6 Blank detail specification pro-forma for type 0,8 connector 17
7 Marking 21
7.1 Marking of component 21
7.2 Marking and contents of package 22

Figure 1 – Connector with pin centre conductor 7
Figure 2 – Connector with socket centre conductor 8
Figure 3 – Gauge pin for socket-centre contact 9
Figure 4 – Connector with pin centre conductor 10
Figure 5 – Connector with socket centre conductor 11

Table 1 – Dimensions of connector with pin-centre contact 7
Table 2 – Dimensions of connector with socket-centre conductor 8
Table 3 – Dimensions of gauge pin for socket-centre contact 9
Table 4 – Dimensions of connector with pin-centre contact 10

Table 5 – Dimensions of connector with socket-centre contact 11
Table 6 – Rating and characteristics 12
Table 7 – Acceptance tests 14
Table 8 – Periodic tests 15

INTERNATIONAL ELECTROTECHNICAL COMMISSION

RADIO-FREQUENCY CONNECTORS –

Part 64: Sectional specification – RF coaxial connectors with 0,8 mm inner diameter of outer conductor – Characteristic impedance 50 Ω (type 0,8)

FOREWORD

1) The International Electrotechnical Commission (IEC) is a worldwide organization for standardization comprising all national electrotechnical committees (IEC National Committees). The object of IEC is to promote international co-operation on all questions concerning standardization in the electrical and electronic fields. To this end and in addition to other activities, IEC publishes International Standards, Technical Specifications, Technical Reports, Publicly Available Specifications (PAS) and Guides (hereafter referred to as "IEC Publication(s)"). Their preparation is entrusted to technical committees; any IEC National Committee interested in the subject dealt with may participate in this preparatory work. International, governmental and non-governmental organizations liaising with the IEC also participate in this preparation. IEC collaborates closely with the International Organization for Standardization (ISO) in accordance with conditions determined by agreement between the two organizations.

2) The formal decisions or agreements of IEC on technical matters express, as nearly as possible, an international consensus of opinion on the relevant subjects since each technical committee has representation from all interested IEC National Committees.

3) IEC Publications have the form of recommendations for international use and are accepted by IEC National Committees in that sense. While all reasonable efforts are made to ensure that the technical content of IEC Publications is accurate, IEC cannot be held responsible for the way in which they are used or for any misinterpretation by any end user.

4) In order to promote international uniformity, IEC National Committees undertake to apply IEC Publications transparently to the maximum extent possible in their national and regional publications. Any divergence between any IEC Publication and the corresponding national or regional publication shall be clearly indicated in the latter.

5) IEC itself does not provide any attestation of conformity. Independent certification bodies provide conformity assessment services and, in some areas, access to IEC marks of conformity. IEC is not responsible for any services carried out by independent certification bodies.

6) All users should ensure that they have the latest edition of this publication.

7) No liability shall attach to IEC or its directors, employees, servants or agents including individual experts and members of its technical committees and IEC National Committees for any personal injury, property damage or other damage of any nature whatsoever, whether direct or indirect, or for costs (including legal fees) and expenses arising out of the publication, use of, or reliance upon, this IEC Publication or any other IEC Publications.

8) Attention is drawn to the Normative references cited in this publication. Use of the referenced publications is indispensable for the correct application of this publication.

9) Attention is drawn to the possibility that some of the elements of this IEC Publication may be the subject of patent rights. IEC shall not be held responsible for identifying any or all such patent rights.

International Standard IEC 61169-64 has been prepared by subcommittee 46F: RF and microwave passive components, of IEC technical committee 46: Cables, wires, waveguides, RF connectors, RF and microwave passive components and accessories.

The text of this standard is based on the following documents:

FDIS	Report on voting
46F/469/FDIS	46F/485/RVD

Full information on the voting for the approval of this International Standard can be found in the report on voting indicated in the above table.

This document has been drafted in accordance with the ISO/IEC Directives, Part 2.

A list of all parts of the IEC 61169 series, under the general title: *Radio-frequency connectors*, can be found on the IEC website.

The committee has decided that the contents of this document will remain unchanged until the stability date indicated on the IEC website under "http://webstore.iec.ch" in the data related to the specific document. At this date, the document will be

- reconfirmed,
- withdrawn,
- replaced by a revised edition, or
- amended.

RADIO-FREQUENCY CONNECTORS –

Part 64: Sectional specification – RF coaxial connectors with 0,8 mm inner diameter of outer conductor – Characteristic impedance 50 Ω (type 0,8)

1 Scope

This part of IEC 61169, which is a sectional specification (SS), provides information and rules for the preparation of detail specifications (DS) for IEC 61169 (all parts) coaxial connectors with 0,8 mm coupling.

The connectors are used with cables with characteristic impedance 50 Ω in an operating frequency range up to 145 GHz. The connectors are widely used in communications and measurements.

It describes the interface dimensions for general purpose connectors with gauging information and the mandatory tests selected from IEC 61169-1, applicable to all detail specifications relative to type 0,8 connectors.

This specification indicates the recommended performance characteristics to be considered when writing a DS and covers all tests schedules and inspection requirements.

NOTE Dimension are in mm, however original dimensions were in inches.

All un-dimensioned pictorial configurations are for reference purpose only.

2 Normative references

The following documents are referred to in the text in such a way that some or all of their content constitutes requirements of this document. For dated references, only the edition cited applies. For undated references, the latest edition of the referenced document (including any amendments) applies.

IEC 61169-1:2013, *Radio-frequency connectors – Part 1: Generic specification – General requirements and measuring methods*

IEC 62037-3, *Passive RF and microwave devices, intermodulation level measurement – Part 3: Measurement of passive intermodulation in coaxial connectors*

3 Terms and definitions

No terms and definitions are listed in this document.

ISO and IEC maintain terminological databases for use in standardization at the following addresses:

- IEC Electropedia: available at http://www.electropedia.org/
- ISO Online browsing platform: available at http://www.iso.org/obp

4 Mating face and gauge information

4.1 Dimensions – General connectors

4.1.1 Connector with pin-centre conductor

The mating face of connector with pin centre contact is shown in Figure 1 and its dimensions are shown in Table 1.

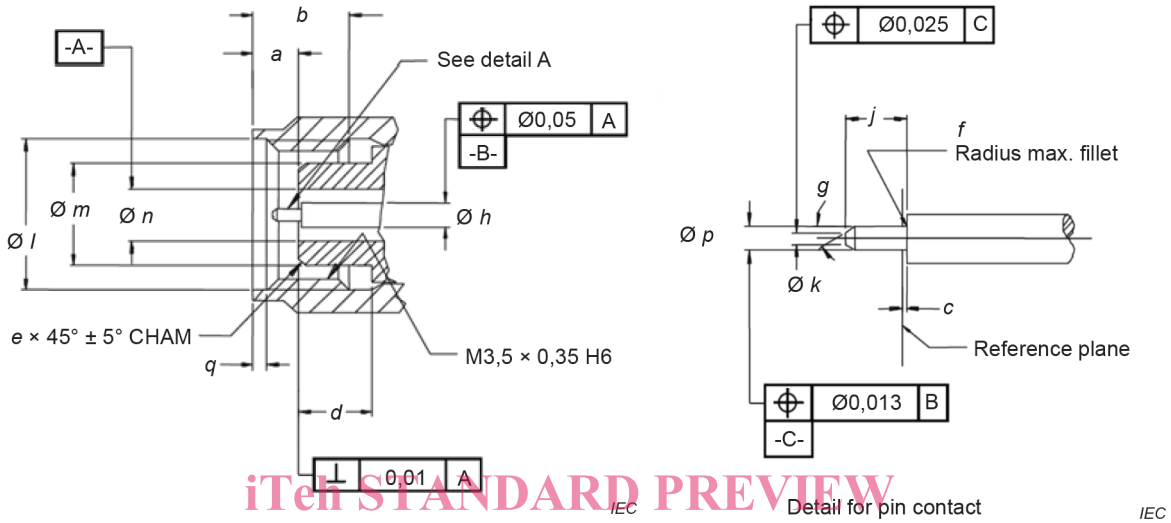

a) Cross sectional view of connector b) Cross sectional view of centre conductor

Figure 1 – Connector with pin centre conductor

Table 1 – Dimensions of connector with pin-centre contact

Ref.	mm	
	Min.	Max.
a	1,010 0	1,490 0
b	2,430 0	2,450 0
c	0,003 0[a]	0,050 0
d	1,490 0	1,570 0
e	0,120 0	0,200 0
f	-	0,020 0
g	37°	42°
h	0,345 0	0,351 0
j	0,364 0	0,416 0
k	0,060 0	0,100 0
l	3,320 0	3,400 0
m	1,890 0	1,898 0
n	0,797 0	0,803 0
p	0,197 0	0,203 0
q	0,360 0	0,440 0
Applicable for inner and outer contact for a 50 Ω nominal impedance		
[a] Measurement uncertainty of inner conductor recession should be considered in the measurement.		

4.1.2 Connector with socket-centre contact

Interface of connector with socket-centre contact is shown in Figure 2, dimensions are shown in Table 2.

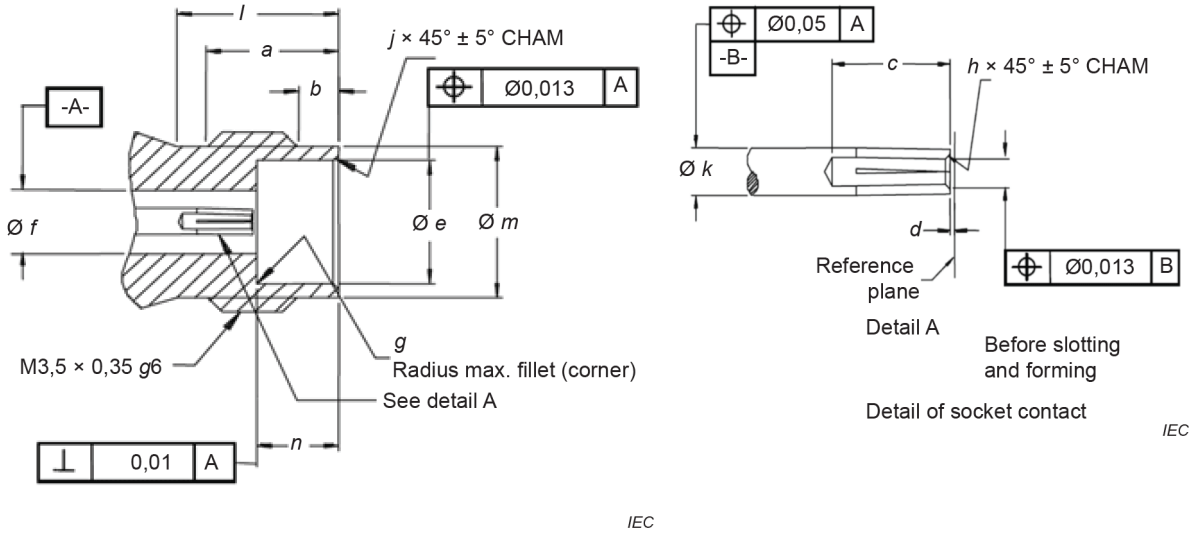

a) Cross sectional view of connector **b) Cross sectional view of centre conductor**

Figure 2 – Connector with socket centre conductor

Table 2 – Dimensions of connector with socket-centre conductor

Ref.	mm	
	Min.	Max.
a	2,220 0	2,380 0
b	0,360 0	0,440 0
c	0,800 0	
d	0,003 0[a]	0,050 0
e	1,904 0	1,912 0
f	0,797 0	0,803 0
g	-	0,011 0
h	0,020 0	0,060 8
j	0,056 0	0,120 0
k	0,345 0	0,351 0
l	3,000 0	
m	2,360 0	2,400 0
n	1,280 0	1,360 0
Applicable for inner and outer contact for a 50 Ω nominal impedance resilient to meet the requirements with gauge pins for socket centre contact expand to meet the requirements with gauge rings for socket outer contact.		
[a] Measurement uncertainty of inner conductor recession should be considered in the measurement.		

4.2 Gauges for general purpose connectors

4.2.1 Gauge pins for socket centre contact

Gauge pins for socket-centre contact is shown in Figure 3, dimensions are shown in Table 3.

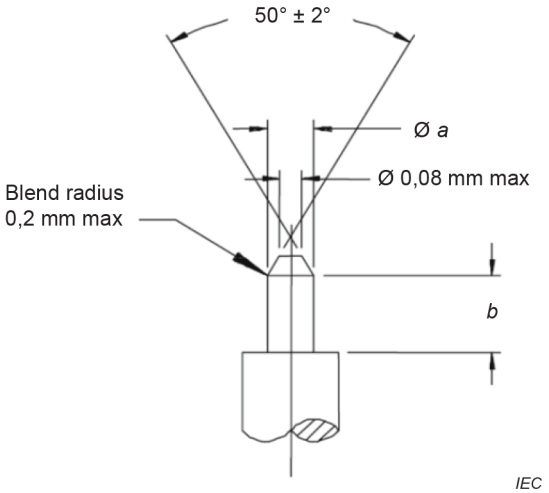

Figure 3 – Gauge pin for socket-centre contact

Table 3 – Dimensions of gauge pin for socket-centre contact

Ref.	Gauge A (For sizing purpose)		Gauge B (For insertion purpose)		Gauge C (For retention purpose) Mass of gauge: 14 $^{+2}_{0}$ g	
	mm		mm		mm	
	Min.	Max.	Min.	Max.	Min.	Max.
a	0,197 0	0,203 0	0,197 0	0,203 0	0,197 0	0,203 0
b	0,364	0,416	0,364	0,416	0,364	0,416
Material: steel, polished.						

4.2.2 Test procedure

a) Sizing test

The gauge A shall be completely inserted three times into the socket centre contact. This is a sizing operation.

After sizing, gauge A shall be inserted into socket centre contact. The insertion force shall not exceed 0,56 N.

b) Withdrawal test

After this, separation force is measured with gauge B and shall require a minimum force of 0,14 N. The contact shall retain the mass of the gauge B in a vertical downward position.

c) Additional test – Insertion test

Following the sizing operation, and if prescribed in the detail specification, the force necessary to insert gauge A fully into the female centre contact shall be measured. When this test is required, the maximum permitted insertion force shall then be specified and shall not exceed 0,28 N.

4.3 Dimensions – Standard test connectors – Grade 0

4.3.1 Connector with pin-centre contact

Interface of connector with pin-centre contact is shown in Figure 4, dimensions are shown in Table 4.

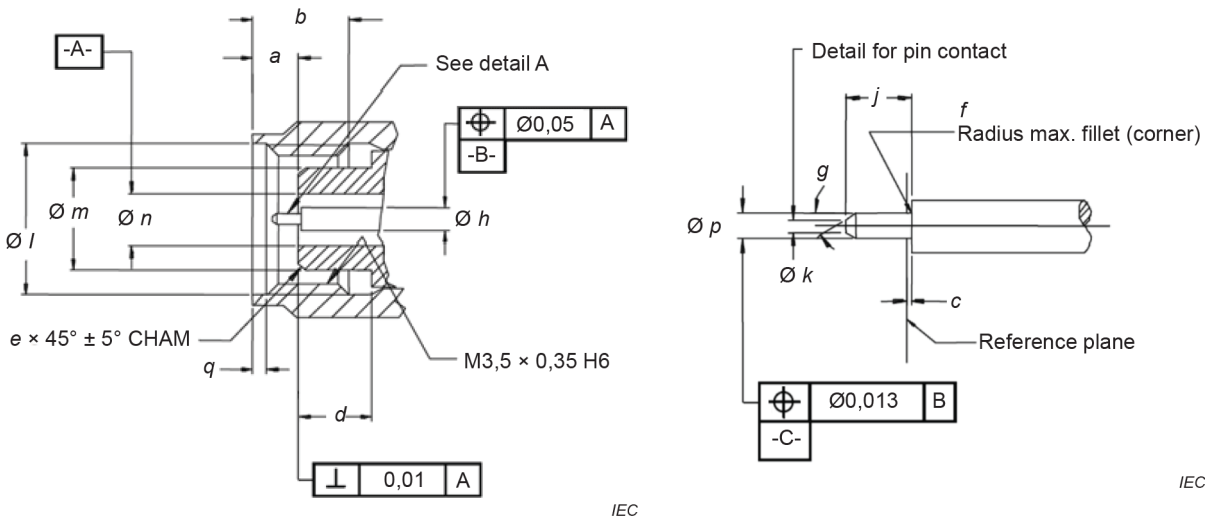

a) Cross sectional view of connector b) Cross sectional view of centre conductor

Figure 4 – Connector with pin centre conductor

Table 4 – Dimensions of connector with pin-centre contact

Ref.	mm	
	Min.	Max.
a	1,010 0	1,490 0
b	2,430 0	2,450 0
c	0,003 0[a]	0,050 0
d	1,490 0	1,570 0
e	0,120 0	0,200 0
f	-	0,020 0
g	37°	42°
h	0,346 5	0,349 5
j	0,364 0	0,416 0
k	0,060 0	0,100 0
l	3,320 0	3,400 0
m	1,890 0	1,898 0
n	0,798 5	0,801 5
p	0,198 5	0,204 5
q	0,360 0	0,440 0

4.3.2 Connector with socket-centre contact

Interface of connector with socket-centre contact is shown in Figure 5, dimensions are shown in Table 5.

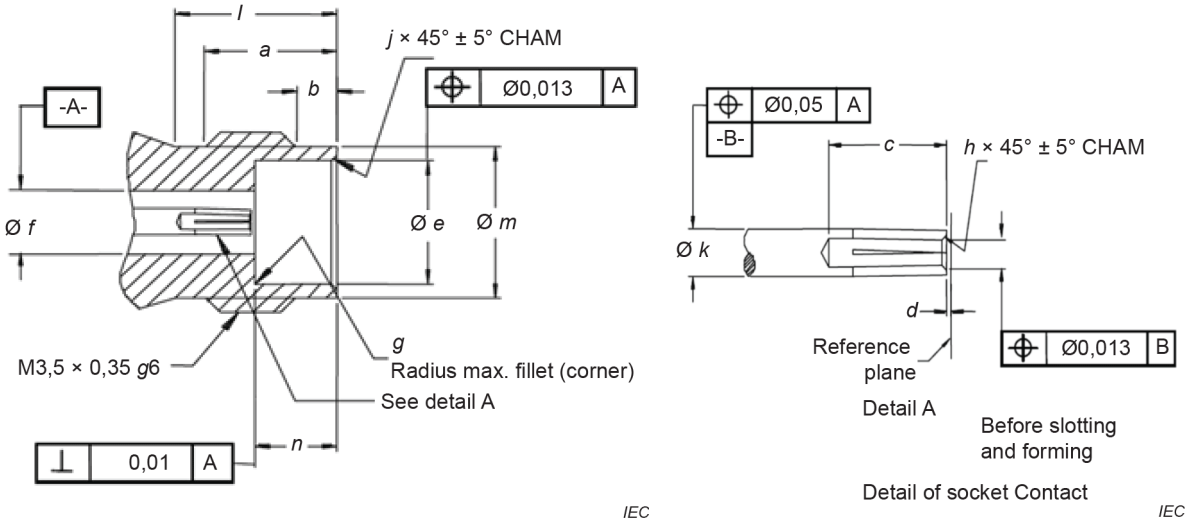

a) Cross sectional view of connector **b) Cross sectional view of centre conductor**

NOTE 1 The outer hoop is optional for some applications.

NOTE 2 Spring finger is bottomed.

Figure 5 – Connector with socket centre conductor

Table 5 – Dimensions of connector with socket-centre contact

Ref.	mm	
	Min.	Max.
a	2,220 0	2,380 0
b	0,360 0	0,440 0
c	0,800 0	
d	0,003 0[a]	0,050 0
e	1,904 0	1,912 0
f	0,798 5	0,804 5
g	-	0,011 0
h	0,020 0	0,060 8
j	0,056 0	0,120 0
k	0,346 5	0,352 5
l	3,000 0	
m	2,360 0	2,400 0
n	1,280 0	1,360 0

5 Quality assessment procedures

5.1 General

Subclauses 5.2 to 5.4 provide recommended ratings, performance and test conditions to be considered when writing a detail specification. They also provide an appropriate schedule of tests with minimum levels of conformance inspection sampling, together with the pro forma blank detail specification (BDS) and instructions for the preparation of a detail specification.

5.2 Ratings and characteristics (see Clause 5 of IEC 61169-1:2013)

The values indicated below are recommended for IEC 61169 (all parts) RF connectors and are given for the writer of the detail specification. They are applicable for the condition when the connectors are fully mated.

Certain tests will usually not be required. When these tests are required, appropriate values shall be entered in the detail specification at the discretion of the specification writer.

Rating and characteristics are given in Table 6.

Table 6 – Rating and characteristics

Ratings and characteristics	IEC 61169-1:2013 Subclause	Value	Remarks, deviation from standard test method
Electrical			
Nominal impedance		50 Ω	
Frequency range		DC to 145 GHz	Or upper frequency limit of cable
Return loss [a]	9.2.1		For interface only
Straight styles		Grade 1 ≤ 0,120 from DC to 50 GHz ≤ 0,150 from 50 GHz to 75 GHz ≤ 0,158 from 75 GHz to 145 GHz Grade 0 ≤ 0,063 from DC to 50 GHz ≤ 0,080 from 50 GHz to 145 GHz	
Right angle styles		See DS	
For flexible cable		See DS	
Component mounting style		See DS	
Solder bucket and PCB mounting style		See DS	
Insertion loss		≤ 0,6 dB from DC to 145 GHz	
Centre contact resistance [b]	9.2.3		
initial		< 5,0 mΩ	
after tests		< 13,0 mΩ	
Outer conductor continuity [b]	9.2.3		
initial		≤ 2 mΩ	
after tests		≤ 3 mΩ	
Insulation resistance	9.2.5		
Initial		≥ 4 GΩ	
Proof voltage [c, d]			
sea level	9.2.6	> 217 V RMS	
Working voltage at sea level		> 80 V RMS	

Ratings and characteristics	IEC 61169-1:2013 Subclause	Value	Remarks, deviation from standard test method
Screening effectiveness [e]	9.2.7		
1 GHz to 3 GHz		na	
Intermodulation level	IEC 62037-3	na	
Mechanical			
Insertion force (resilient contacts)	9.3.4		
centre contact		≥ 0,16 N	
outer contact		≥ 0,56 N	
Centre contact captivation[f]	9.3.5		Only applicable to centre contact with captivation structure; after test, the dimensions of centre contact comply with interface dimension
Axial force		≥ 8,0 N	
Torque		See DS	
Engagement and separation axial force			
Engagement		< 0,45 N	Typical (± 0,1 Nm)
Separation		≥ 0,55 N	Typical
Effectiveness of cable fixing against			
– cable rotation	9.3.7		
– cable pulling	9.3.8		
– cable bending	9.3.9		
– cable torsion	9.3.10		
Strength of coupling mechanism	9.3.11	≥ N	
Vibration	9.3.3	m/s^2 (10 Hz to 2 000 Hz)	acceleration
Endurance			
Mechanical endurance	9.3.15	operations	
High temperature endurance[g]	9.4.5	at °C	
Environmental			
Climatic category			A
			B
			C
Salt mist	9.4.10	h spray	

[a] Characteristics indicated are those that can be applied to basic connector. Intrinsic limitations of the cable may diminish the performance of the assembly and reference should always be made to the actual values given in the detail specification.

[b] Values for a single pair of connectors.

[c] Voltages are RMS values of AC at 40 Hz to 65 Hz, unless otherwise specified.

[d] Values are depending also of the cable type.

[e] Applicable in fully mated position. Depending of cable type values for a single pair of connector.

[f] Maximum displacement of 0,25 mm in each direction.

[g] Upper temperature limit can be restricted by the cable characteristics. Reference should be made to the relevant cable specification.