IEC 61169-15

Edition 1.0 2021-01

INTERNATIONAL STANDARD

NORME INTERNATIONALE

Radio-frequency connectors – Part 15: Sectional specification – RF coaxial connectors with inner diameter of outer conductor 4,13 mm (0,163 in) with threaded coupling – Characteristic impedance 50 Ω (type SMA)

iTeh STANDARD PREVIEW
(standards.iteh.ai)
IEC 61169-15:2021
https://standards.iteh.ai/catalog/standards/sist/ce6bf80c-ce74-4cf8-976e-
IEC 61169-15:2021

Connecteurs pour fréquences radioélectriques – Partie 15: Spécification intermédiaire – Connecteurs coaxiaux pour fréquences radioélectriques avec diamètre intérieur du conducteur extérieur de 4,13 mm (0,163 in) à couplage fileté – Impédance caractéristique 50 Ω (type SMA)

IEC 61169-15:2021-01(en-fr)

THIS PUBLICATION IS COPYRIGHT PROTECTED
Copyright © 2021 IEC, Geneva, Switzerland

All rights reserved. Unless otherwise specified, no part of this publication may be reproduced or utilized in any form or by any means, electronic or mechanical, including photocopying and microfilm, without permission in writing from either IEC or IEC's member National Committee in the country of the requester. If you have any questions about IEC copyright or have an enquiry about obtaining additional rights to this publication, please contact the address below or your local IEC member National Committee for further information.

Droits de reproduction réservés. Sauf indication contraire, aucune partie de cette publication ne peut être reproduite ni utilisée sous quelque forme que ce soit et par aucun procédé, électronique ou mécanique, y compris la photocopie et les microfilms, sans l'accord écrit de l'IEC ou du Comité national de l'IEC du pays du demandeur. Si vous avez des questions sur le copyright de l'IEC ou si vous désirez obtenir des droits supplémentaires sur cette publication, utilisez les coordonnées ci-après ou contactez le Comité national de l'IEC de votre pays de résidence.

IEC Central Office
3, rue de Varembé
CH-1211 Geneva 20
Switzerland

Tel.: +41 22 919 02 11
info@iec.ch
www.iec.ch

About the IEC
The International Electrotechnical Commission (IEC) is the leading global organization that prepares and publishes International Standards for all electrical, electronic and related technologies.

About IEC publications
The technical content of IEC publications is kept under constant review by the IEC. Please make sure that you have the latest edition, a corrigendum or an amendment might have been published.

IEC publications search - webstore.iec.ch/advsearchform
The advanced search enables to find IEC publications by a variety of criteria (reference number, text, technical committee, …). It also gives information on projects, replaced and withdrawn publications.

IEC Just Published - webstore.iec.ch/justpublished
Stay up to date on all new IEC publications. Just Published details all new publications released. Available online and once a month by email.

IEC Customer Service Centre - webstore.iec.ch/csc
If you wish to give us your feedback on this publication or need further assistance, please contact the Customer Service Centre: sales@iec.ch.

IEC online collection - oc.iec.ch
Discover our powerful search engine and read freely all the publications previews. With a subscription you will always have access to up to date content tailored to your needs.

Electropedia - www.electropedia.org
The world's leading online dictionary on electrotechnology, containing more than 22 000 terminological entries in English and French, with equivalent terms in 18 additional languages. Also known as the International Electrotechnical Vocabulary (IEV) online.

iTeh STANDARD PREVIEW
(standards.iteh.ai)
IEC 61169-15:2021
https://standards.iteh.ai/catalog/standards/sist/ee6bf80c-ee74-4ef8-976e-e87ad720a914/iec-61169-15-2021

A propos de l'IEC
La Commission Electrotechnique Internationale (IEC) est la première organisation mondiale qui élabore et publie des Normes internationales pour tout ce qui a trait à l'électricité, à l'électronique et aux technologies apparentées.

A propos des publications IEC
Le contenu technique des publications IEC est constamment revu. Veuillez vous assurer que vous possédez l'édition la plus récente, un corrigendum ou amendement peut avoir été publié.

Recherche de publications IEC - webstore.iec.ch/advsearchform
La recherche avancée permet de trouver des publications IEC en utilisant différents critères (numéro de référence, texte, comité d'études, …). Elle donne aussi des informations sur les projets et les publications remplacées ou retirées.

IEC Just Published - webstore.iec.ch/justpublished
Restez informé sur les nouvelles publications IEC. Just Published détaille les nouvelles publications parues. Disponible en ligne et une fois par mois par email.

Service Clients - webstore.iec.ch/csc
Si vous désirez nous donner des commentaires sur cette publication ou si vous avez des questions contactez-nous: sales@iec.ch.

IEC online collection - oc.iec.ch
Découvrez notre puissant moteur de recherche et consultez gratuitement tous les aperçus des publications. Avec un abonnement, vous aurez toujours accès à un contenu à jour adapté à vos besoins.

Electropedia - www.electropedia.org
Le premier dictionnaire d'électrotechnologie en ligne au monde, avec plus de 22 000 articles terminologiques en anglais et en français, ainsi que les termes équivalents dans 16 langues additionnelles. Egalement appelé Vocabulaire Electrotechnique International (IEV) en ligne.

IEC 61169-15

Edition 1.0 2021-01

INTERNATIONAL STANDARD

NORME INTERNATIONALE

Radio-frequency connectors –
Part 15: Sectional specification – RF coaxial connectors with inner diameter of outer conductor 4,13 mm (0,163 in) with threaded coupling – Characteristic impedance 50 Ω (type SMA)

iTeh STANDARD PREVIEW
(standards.iteh.ai)
IEC 61169-15:2021
https://standards.iteh.ai/catalog/standards/sist/ce6bf80c-ce74-4cf8-976e-

Connecteurs pour fréquences radioélectriques –
Partie 15: Spécification intermédiaire – Connecteurs coaxiaux pour fréquences radioélectriques avec diamètre intérieur du conducteur extérieur de 4,13 mm (0,163 in) à couplage fileté – Impédance caractéristique 50 Ω (type SMA)

INTERNATIONAL
ELECTROTECHNICAL
COMMISSION

COMMISSION
ELECTROTECHNIQUE
INTERNATIONALE

ICS 33.120.30

ISBN 978-2-8322-9257-0

Warning! Make sure that you obtained this publication from an authorized distributor.
Attention! Veuillez vous assurer que vous avez obtenu cette publication via un distributeur agréé.

® Registered trademark of the International Electrotechnical Commission
Marque déposée de la Commission Electrotechnique Internationale

CONTENTS

FOREWORD 3
1 Scope 5
2 Normative references 5
3 Terms and definitions 5
4 Mating face and gauge information 6
4.1 Dimensions – High performance connectors – Grade 1 6
4.1.1 Connector with pin centre contact 6
4.1.2 Connector with socket centre contact 7
4.2 Gauge pin for socket centre contact 9
4.3 Dimensions – Standard test connectors – Grade 0 9
4.3.1 Connectors with pin centre contact 9
4.3.2 Connector with socket centre contact 11
5 Quality assessment procedures 12
5.1 General 12
5.2 Ratings and characteristics 12
5.3 Test schedule and inspection requirements 16
5.3.1 Acceptance tests 16
5.3.2 Periodic tests 16
5.3.3 Procedures for the quality conformance 18
6 Instructions for preparation of detail specifications 18
6.1 General 18
6.2 Identification of the component 18
6.3 Performance 18
6.4 Marking, ordering information and related matters 19
6.5 Selection of tests, test conditions and severities 19
6.6 Blank detail specification pro-forma for SMA connectors 19
Bibliography 24

Figure 1 – Connector with pin centre contact (for dimensions, see Table 1) 6
Figure 2 – Connector with socket centre contact (for dimensions, see Table 2) 8
Figure 3 – Gauge pin for socket centre contact (for dimensions, see Table 3) 9
Figure 4 – Connector with pin centre contact (for dimensions, see Table 4) 10
Figure 5 – Connector with socket in centre contact (for dimensions, see Table 5) 11

Table 1 – Dimensions of connector with pin centre contact 7
Table 2 – Dimensions of connector with socket centre contact 8
Table 3 – Dimensions of gauge pin for socket centre contact 9
Table 4 – Dimensions of connector with pin centre contact 10
Table 5 – Dimensions of connector with socket centre contact 11
Table 6 – Preferred climatic categories 12
Table 7 – Ratings and characteristics 12
Table 8 – Acceptance tests 16
Table 9 – Periodic tests 17

iTeh STANDARD PREVIEW
(standards.iteh.ai)
IEC 61169-15:2021
https://standards.iteh.ai/catalog/standards/sist/ce6bf80c-ce74-4cf8-976e-c87ed720a914/iec-61169-15-2021

INTERNATIONAL ELECTROTECHNICAL COMMISSION

_____

RADIO-FREQUENCY CONNECTORS –

Part 15: Sectional specification – RF coaxial connectors with inner diameter of outer conductor 4,13 mm (0,163 in) with threaded coupling – Characteristic impedance 50 Ω (type SMA)

FOREWORD

1) The International Electrotechnical Commission (IEC) is a worldwide organization for standardization comprising all national electrotechnical committees (IEC National Committees). The object of IEC is to promote international co-operation on all questions concerning standardization in the electrical and electronic fields. To this end and in addition to other activities, IEC publishes International Standards, Technical Specifications, Technical Reports, Publicly Available Specifications (PAS) and Guides (hereafter referred to as "IEC Publication(s)"). Their preparation is entrusted to technical committees; any IEC National Committee interested in the subject dealt with may participate in this preparatory work. International, governmental and non-Governmental organizations liaising with the IEC also participate in this preparation. IEC collaborates closely with the International Organization for Standardization (ISO) in accordance with conditions determined by agreement between the two organizations.
2) The formal decisions or agreements of IEC on technical matters express, as nearly as possible, an international consensus of opinion on the relevant subjects since each technical committee has representation from all interested IEC National Committees.
3) IEC Publications have the form of recommendations for international use and are accepted by IEC National Committees in that sense. While all reasonable efforts are made to ensure that the technical content of IEC Publications is accurate, IEC cannot be held responsible for the way in which they are used or for any misinterpretation by any end user.
4) In order to promote international uniformity, IEC National Committees undertake to apply IEC Publications transparently to the maximum extent possible in their national and regional publications. Any divergence between any IEC Publication and the corresponding national or regional publication shall be clearly indicated in the latter.
5) IEC itself does not provide any attestation of conformity. Independent certification bodies provide conformity assessment services and, in some areas, access to IEC marks of conformity. IEC is not responsible for any services carried out by independent certification bodies.
6) All users should ensure that they have the latest edition of this publication.
7) No liability shall attach to IEC or its directors, employees, servants or agents including individual experts and members of its technical committees and IEC National Committees for any personal injury, property damage or other damage of any nature whatsoever, whether direct or indirect, or for costs (including legal fees) and expenses arising out of the publication, use of, or reliance upon, this IEC Publication or any other IEC Publications.
8) Attention is drawn to the Normative references cited in this publication. Use of the referenced publications is indispensable for the correct application of this publication.
9) Attention is drawn to the possibility that some of the elements of this IEC Publication may be the subject of patent rights. IEC shall not be held responsible for identifying any or all such patent rights.

iTeh STANDARD PREVIEW
(standards.iteh.ai)
IEC 61169-15:2021
https://standards.iteh.ai/catalog/standards/sist/e6bf80fc-ec2f-4cab-b7ee-c87ed720a914/iec-61169-15-2021

International Standard IEC 61169-15 has been prepared by subcommittee 46F: RF and microwave passive components, of IEC technical committee 46: Cables, wires, waveguides, RF connectors, RF and microwave passive components and accessories.

This first edition cancels and replaces IEC 60169-15 published in 1979 and the amendment 1 published in 1996. This edition constitutes a technical revision.

The text of this International Standard is based on the following documents:

FDIS	Report on voting
46F/528/FDIS	46F/541/RVD

Full information on the voting for the approval of this International Standard can be found in the report on voting indicated in the above table.

This document has been drafted in accordance with the ISO/IEC Directives, Part 2.

A list of all parts of the IEC 61169 series, under the general title *Radio-frequency connectors*, can be found on the IEC website.

The committee has decided that the contents of this document will remain unchanged until the stability date indicated on the IEC website under "http://webstore.iec.ch" in the data related to the specific document. At this date, the document will be

- reconfirmed,
- withdrawn,
- replaced by a revised edition, or
- amended.

iTeh STANDARD PREVIEW
(standards.iteh.ai)
IEC 61169-15:2021
https://standards.iteh.ai/catalog/standards/sist/ce6bf80c-ce74-4cf8-976e-c87ed720a914/iec-61169-15-2021

RADIO-FREQUENCY CONNECTORS –

Part 15: Sectional specification – RF coaxial connectors with inner diameter of outer conductor 4,13 mm (0,163 in) with threaded coupling – Characteristic impedance 50 Ω (type SMA)

1 Scope

This part of IEC 61169, which is a sectional specification (SS), provides information and rules for the preparation of detail specifications (DS) for RF coaxial connectors with inner diameter of outer conductor 4,13 mm (0,163 in) with threaded coupling with a characteristic impedance of 50 Ω (type SMA).

This document specifies mating face dimensions for high performance connectors – grade 1, dimensional details of standard test connectors – grade 0, gauging information and tests selected from IEC 61169-1, applicable to all detail specifications relating to series SMA RF connectors.

This document indicates recommended performance characteristics to be considered when writing a detail specification and it covers test schedules and inspection requirements for assessment levels M and H.

iTeh STANDARD PREVIEW
(standards.iteh.ai)

The SMA types RF coaxial connectors are used with all kinds of RF cables and microstrips in microwave transmission systems. The operating frequency is up to 18 GHz. These connectors can be intermated with 3,5 mm (IEEE 287-2007) and 2,92 mm (IEC 61169-35) connectors.

IEC 61169-15:2021
https://standards.iteh.ai/catalog/standards/sist/ce6bf80c-ce74-4cf8-976e-e87ed720a914/iec-61169-15-2021

NOTE Metric dimensions are original dimensions. All undimensioned pictorial configurations are for reference purpose only.

2 Normative references

The following documents are referred to in the text in such a way that some or all of their content constitutes requirements of this document. For dated references, only the edition cited applies. For undated references, the latest edition of the referenced document (including any amendments) applies.

IEC 61169-1:2013, *Radio frequency connectors – Part 1: Generic specification – General requirements and measuring methods*

IEC 62153-4-7:2015, *Metallic communication cable test methods – Part 4-7: Electromagnetic compatibility (EMC) – Test method for measuring of transfer impedance Z_T and screening attenuation a_s or coupling attenuation a_c of connectors and assemblies up to and above 3 GHz – Triaxial tube in tube method*

3 Terms and definitions

No terms and definitions are listed in this document.

ISO and IEC maintain terminological databases for use in standardization at the following addresses:

- IEC Electropedia: available at http://www.electropedia.org/
- ISO Online browsing platform: available at http://www.iso.org/obp

4 Mating face and gauge information

4.1 Dimensions – High performance connectors – Grade 1

4.1.1 Connector with pin centre contact

The mating face of connector with pin centre contact is shown in Figure 1 and its dimensions are shown in Table 1.

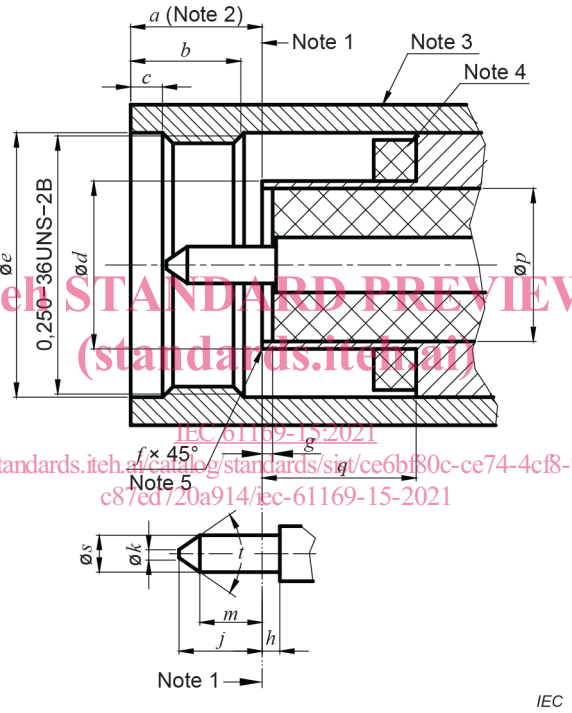

iTeh STANDARD PREVIEW
(standards.iteh.ai)
IEC 61169-15:2021
https://standards.iteh.ai/catalog/standards/sist/ce6bf80c-ce74-4cf8-976e-c87ed720a914/iec-61169-15-2021

NOTE 1 Mechanical and electrical reference plane.

NOTE 2 Coupling nut in forward position.

NOTE 3 Hex 7,85/8,00 mm (0,309/0,315 in) width across flats, 3,18 mm (0,125 in) min flat length. It can extend throughout the full length of the coupling nut. Other structures are also acceptable.

NOTE 4 Sealing ring.

NOTE 5 Spherical or chamfered.

Figure 1 – Connector with pin centre contact (for dimensions, see Table 1)

Table 1 – Dimensions of connector with pin centre contact

Ref.	mm		in		Remarks
	min	max	min	max	
a		3,43		0,135	
b	3,30	-	0,129 9	-	
c	0,38	1,14	0,015	0,045	
d	-	4,59	-	0,180 8	
e	6,35	-	0,255	-	
f [a]	-	0,08	-	0,003	
g [b]	0,00	0,25	0,00	0,009 8	
h	0,00	0,25	0,00	0,009 8	
j	-	-	-	-	
k	-	0,30	-	0,012	
m	1,27	-	0,050	-	
p [c]	-	-	-		
q [d]	-	-	-	-	
s	0,902	0,940	0,035 5	0,037 0	
t	56°	70°	56°	70°	Angle

[a] 0,08 mm (0,003 in) max, radius optional.

[b] 000 max projection.

[c] Choose tolerance to give the requirement of 50 Ω. For non-center contact connector, dimension *p* may deviate from the values given when the centre conductor of the cable is used as the contact pin. In this case, the inner diameter of the outer conductor is identical to the outer conductor of the cable.

[d] Dimension *q* should be such that the reference planes coincide, and the connectors meet the required environmental performance.

iTeh STANDARD PREVIEW
(standards.iteh.ai)
IEC 61169-15:2021
https://standards.iteh.ai/catalog/standards/sist/ce6bf80c-ce74-4cf8-976e-c87ed720a914/iec-61169-15-2021

4.1.2 Connector with socket centre contact

The mating face of connector with socket centre contact is shown in Figure 2 and its dimensions are shown in Table 2.

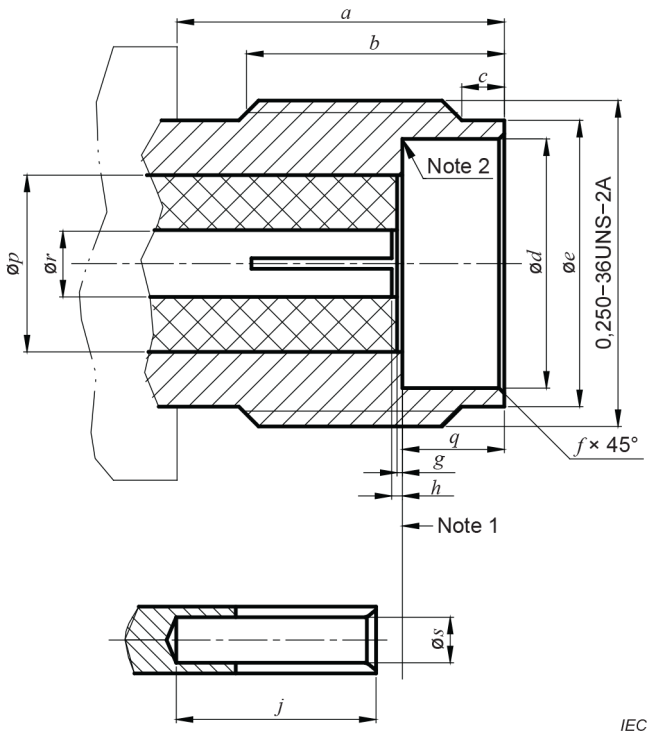

NOTE 1 Mechanical and electrical reference plane.

NOTE 2 Undercut acceptable, no fillet permitted.

iTeh STANDARD PREVIEW
(standards.iteh.ai)

Figure 2 – Connector with socket centre contact (for dimensions, see Table 2)

IEC 61169-15:2021
https://standards.iteh.ai/catalog/standards/sist/ec6bf80e-ce74-4ef8-976e-c87ed720a914/iec-61169-15-2021

Table 2 – Dimensions of connector with socket centre contact

Ref.	mm		in		Remarks
	min	max	min	max	
a	5,54	-	0,218	-	
b	4,32	-	0,170	-	Full thread
c	0,38	1,14	0,015	0,045	
d	4,60	-	0,181 0	-	
e	5,28	5,49	0,208	0,216	
f	0,00	0,13	0	0,005	
g [a]	0,00	0,25	0	0,009 8	
h	0,00	0,25	0	0,009 8	
j	2,67	-	0,105	-	
p [b]	-	-	-	-	
q	1,88	1,98	0,074	0,078	
r	1,245	1,295	0,049	0,051	
s [c]	-	-	-	-	

[a] 000 max projection. The dielectric is not allowed to protrude from the outer conductor.

[b] Choose tolerance to give the requirement of 50 Ω.

[c] Design of slotting is optional. It is chosen to meet return loss (*RL*), mating characteristics, and connector durability requirements, when mated with a 0,902 mm to 0,940 mm (0,035 5 in to 0,037 0 in) gauge pin.

4.2 Gauge pin for socket centre contact

The gauge pin for socket centre contact is shown in Figure 3 and its dimensions are shown in Table 3.

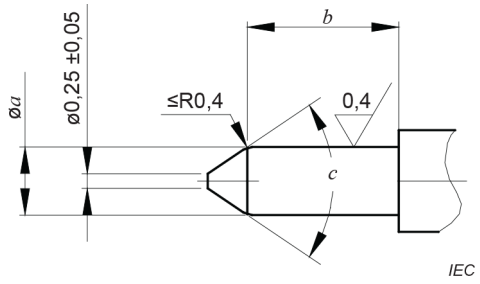

Figure 3 – Gauge pin for socket centre contact (for dimensions, see Table 3)

Table 3 – Dimensions of gauge pin for socket centre contact

Ref.	Gauge A (For sizing purpose)		Gauge B (For insertion purpose)		Gauge C, mass of gauge: $28\,^{+2}_{0}$ g (For retention purpose)	
	min	max	min	max	min	max
a	0,950	0,955	0,940	0,943	0,899	0,902
b	0,76	1,14	1,52	-	1,52	-
c	56°	64°	64°	-	-	56°
Material: steel, polished.						

iTeh STANDARD PREVIEW
(standards.iteh.ai)
IEC 61169-15:2021
https://standards.iteh.ai/catalog/standards/sist/ee6bf80e-ee74-4ef8-976e-c87ed720a914/iec-61169-15-2021

The test procedure is as follows:

a) Sizing test

The gauge A shall be inserted into the socket-centre contact three times. This is a sizing operation and should only be carried out when the socket-centre contact is removed from the connector.

b) Insertion test

Following the sizing operation, and if required in the detail specification, the force necessary to insert gauge B fully into the socket-centre contact shall be measured. When this test is required, the maximum permitted insertion force shall then be specified and shall not exceed 13,3 N.

c) Retention test

After the sizing test, the gauge B shall be inserted into socket-centre contact. The contact shall retain the mass of the gauge B in a vertical downward position.

4.3 Dimensions – Standard test connectors – Grade 0

4.3.1 Connectors with pin centre contact

The interface of connector with pin centre contact is shown in Figure 4, dimensions are shown in Table 4.

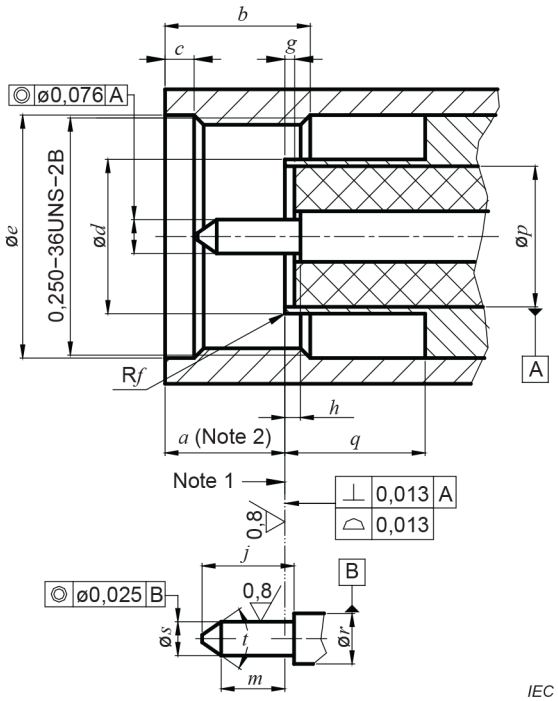

NOTE 1 Mechanical and electrical reference plane.

NOTE 2 Coupling nut in forward position.

iTeh STANDARD PREVIEW
(standards.iteh.ai)

Figure 4 – Connector with pin centre contact (for dimensions, see Table 4)

Table 4 – Dimensions of connector with pin centre contact

IEC 61169-15:2021
https://standards.iteh.ai/catalog/standards/sist/ce6bf80c-ce74-4cf8-976e-87ed720a914/iec-61169-15-2021

Ref.	mm		in		Remarks
	Min.	Max.	Min.	Max.	
a	2,59	3,35	0,102	0,132	
b	3,3	-	0,146	0,170	
c	0,38	1,14	0,015	0,045	
d	4,521	4,592	0,178 0	0,180 8	
e	6,48	6,73	0,255	0,265	
f [a]	-	0,08	-	0,003	
g	0,00	0,05	0,000	0,002	
h	0,00	0,076	0,000	0,003	
j	2,03	2,29	0,080	0,090	
m	1,27	-	0,050	-	
p [b]	4,102	4,127	0,161 5	0,162 5	
q	2,03	-	0,080	-	
r [b]	1,27 (nominal value)		0,050 (nominal value)		
s	0,902	0,927	0,035 5	0,036 5	
t	56°	70°	56°	70°	Angle

[a] 0,08 mm (0,003 in) × 45°, chamfer optional.

[b] Choose to give the required performance 50 Ω ± 0,5 Ω. The given nominal diameter in the table is based on the assumption that a PTFE dielectric having a dielectric constant of 2,02 is used.

4.3.2 Connector with socket centre contact

The mating face of standard test connector with socket centre contact is shown in Figure 5 and its dimensions are shown in Table 5.

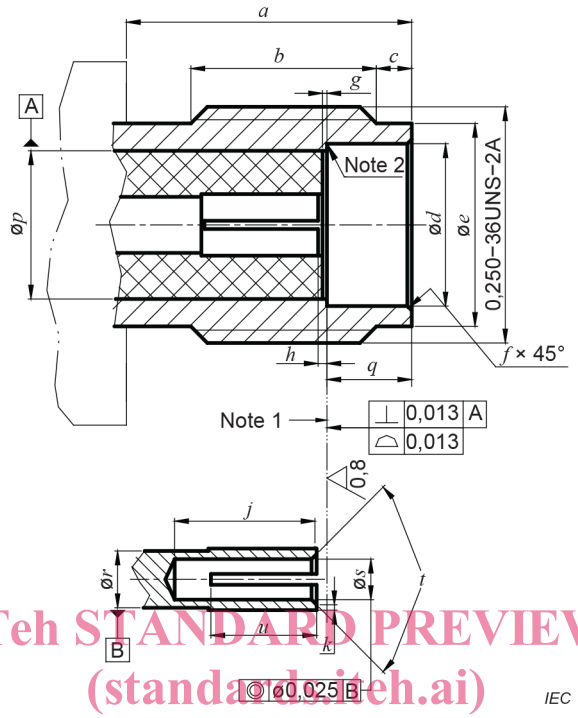

iTeh STANDARD PREVIEW
(standards.iteh.ai)

NOTE 1 Mechanical and electrical reference plane.

NOTE 2 Undercut acceptable, no fillet permitted.

IEC 61169-15:2021
https://standards.iteh.ai/catalog/standards/sist/ce6bf80c-ce74-4cf8-976e-

Figure 5 – Connector with socket in centre contact (for dimensions, see Table 5)

Table 5 – Dimensions of connector with socket centre contact

Ref.	mm		in		Remarks
	Min.	Max.	Min.	Max.	
a	5,54	-	0,218	-	
b	3,81	-	0,150	-	Full thread
c	0,38	1,14	0,015	0,045	
d	4,597	4,666	0,181 0	0,183 7	
e	5,283	5,49	0,208	0,216	
f	-	0,25	-	0,010	
g	0,00	0,05	0,000	0,002	
h	0,00	0,076	0,000	0,003	
j	2,54	-	0,100	-	
k	0,08	-	0,003	-	
p	4,13 (nominal value)		0,162 7 (nominal value)		
q [a]	1,88	1,98	0,074	0,078	
r [b]	1,27 (nominal value)		0,050 (nominal value)		
s	0,965	0,99	0,038	0,039	
t	84°	96°	84°	96°	Angle

[a] Dimension *q* should be such that the reference planes coincide, and the connectors meet the required environmental performance.

[b] Choose to give the required performance 50 Ω ± 0,5 Ω. The given nominal diameter in the table is based on the assumption that a PTFE dielectric having a dielectric constant of 2,02 is used.

5 Quality assessment procedures

5.1 General

Subclauses 5.2 to 5.3 provide recommended ratings, performance and test conditions to be considered when writing a detail specification (DS). They also provide an appropriate schedule of tests with minimum levels of conformance inspection sampling, together with the pro forma blank detail specification (BDS) and instructions for the preparation of a detail specification.

5.2 Ratings and characteristics

Preferred climatic categories are given in Table 6.

The values indicated below are recommended for SMA series RF connectors and are given for the writer of the detail specification. They are applicable for the condition when the connectors are fully mated. Rating and characteristics are given in Table 7.

Certain tests are listed without any recommended values being given. These tests will usually not be required. When these tests are required, appropriate values shall be entered in the detail specification at the discretion of the specification writer.

Table 6 – Preferred climatic categories

iTeh STANDARD PREVIEW
(standards.iteh.ai)

Climate type	Grade *	Temperature range	Steady damp heat
40/85/21	A	− 40 °C to + 85 °C	21 days
55/125/21	B	− 55 °C to + 125 °C	21 days
55/155/56	C	− 55 °C to + 155 °C	56 days

* To be included in the IEC type designation.

IEC 61169-15:2021
https://standards.iteh.ai/catalog/standards/sist/ce6bf80c-ce74-4cf8-976e-c87ed720a914/iec-61169-15-2021

Table 7 – Ratings and characteristics

Ratings and characteristics	IEC 61169-1:2013 Subclause	Value	Remarks including any deviations from standard test methods
Electrical			
Nominal impedance		50 Ω	
Frequency range [a]			Or upper frequency limit of cable
Grade 1 connectors		DC to 18 GHz	
– flexible, straight styles		DC to 12,4 GHz	
– semi-rigid and semi-flexible, straight styles		DC to 18 GHz	
– right-angle styles		DC to 12,4 GHz	
Rated voltage at sea-level [c, d]			(86 to 106) kPa
– flexible cable, dielectric nominal diameter 2,95 mm (0,116 in)		335 V	
– flexible cable, dielectric nominal diameter 1,52 mm (0,060 in)		250 V	
– flexible cable, dielectric nominal diameter 0,84 mm (0,033 in)		170 V	
– 50-141 type semi-rigid and semi-flexible		335 V	
– 50-086 type semi-rigid and semi-flexible		250 V	

Ratings and characteristics	IEC 61169-1:2013 Subclause	Value	Remarks including any deviations from standard test methods
Rated voltage at 4,4 kPa [c, d]			4,4 kPa approximately equivalent to 20 km
– flexible cable, dielectric nominal diameter 2,95 mm (0,116 in)		85 V	
– flexible cable, dielectric nominal diameter 1,52 mm (0,060 in)		65 V	
– flexible cable, dielectric nominal diameter 0,84 mm (0,033 in)		45 V	
– 50-141 type semi-rigid and semi-flexible		85 V	
– 50-086 type semi-rigid and semi-flexible		65 V	
Return loss [a]	9.2.1		f :GHz
– flexible			
– straight styles		≥ 17,6 dB (DC to 18 GHz)	
– right-angle styles		See DS	
– semi-rigid and semi-flexible			
– straight styles		≥ 17,6 dB (DC to 18 GHz)	
– right-angle styles		See DS	
– component mounting styles		See DS	
– solder bucket and PCB mounting styles		See DS	
Centre contact resistance [b]	9.2.3		
– initial			
Sealing non-hermetically		≤ 3,0 mΩ	
Sealing hermetically		≤ 10,0 mΩ	
– after conditioning			
Sealing non-hermetically		≤ 5,0 mΩ	
Sealing hermetically		—	
Outer conductor continuity [b]	9.2.3		
– initial			
Sealing non-hermetically		≤ 2,5 mΩ	
Sealing hermetically		≤ 5,0 mΩ	
Stainless steel		≤ 5,0 mΩ	
– after conditioning			
Sealing non-hermetically		≤ 5,0 mΩ	
Sealing hermetically		—	
Stainless steel		—	
Insulation resistance	9.2.5		
– initial		≥ 5 000 MΩ	
– after conditioning		≥ 200 MΩ	
Proof voltage at sea-level [c, d]	9.2.6		(86 to 106) kPa
– flexible cable, dielectric nominal diameter 2,95 mm (0,116 in)		1 000 V	
– flexible cable, dielectric nominal diameter 1,52 mm (0,060 in)		750 V	
– flexible cable, dielectric nominal diameter 0,84 mm (0,033 in)		500 V	
– 50-141 type semi-rigid and semi-flexible		1 000 V	
– 50-086 type semi-rigid and semi-flexible		750 V	

iTeh STANDARD PREVIEW
(standards.iteh.ai)
IEC 61169-15:2021
https://standards.iteh.ai/catalog/standards/sist/ce6b80ce-ce74-4cf8-976e-c87ed720a914/iec-61169-15-2021