IEC 61788-17

Edition 2.0 2021-04
REDLINE VERSION

INTERNATIONAL STANDARD

colour inside

Superconductivity –
Part 17: Electronic characteristic measurements – Local critical current density and its distribution in large-area superconducting films

iTeh Standards
(https://standards.iteh.ai)
Document Preview

IEC 61788-17:2021
https://standards.iteh.ai/catalog/standards/iec/eb1c76c0-cdb0-4fb0-8316-1e59e6145b05/iec-61788-17-2021

IEC 61788-17:2021-04 RLV(en)

THIS PUBLICATION IS COPYRIGHT PROTECTED
Copyright © 2021 IEC, Geneva, Switzerland

All rights reserved. Unless otherwise specified, no part of this publication may be reproduced or utilized in any form or by any means, electronic or mechanical, including photocopying and microfilm, without permission in writing from either IEC or IEC's member National Committee in the country of the requester. If you have any questions about IEC copyright or have an enquiry about obtaining additional rights to this publication, please contact the address below or your local IEC member National Committee for further information.

IEC Central Office
3, rue de Varembé
CH-1211 Geneva 20
Switzerland

Tel.: +41 22 919 02 11
info@iec.ch
www.iec.ch

About the IEC
The International Electrotechnical Commission (IEC) is the leading global organization that prepares and publishes International Standards for all electrical, electronic and related technologies.

About IEC publications
The technical content of IEC publications is kept under constant review by the IEC. Please make sure that you have the latest edition, a corrigendum or an amendment might have been published.

IEC publications search - webstore.iec.ch/advsearchform
The advanced search enables to find IEC publications by a variety of criteria (reference number, text, technical committee, …). It also gives information on projects, replaced and withdrawn publications.

IEC Just Published - webstore.iec.ch/justpublished
Stay up to date on all new IEC publications. Just Published details all new publications released. Available online and once a month by email.

IEC Customer Service Centre - webstore.iec.ch/csc
If you wish to give us your feedback on this publication or need further assistance, please contact the Customer Service Centre: sales@iec.ch.

IEC online collection - oc.iec.ch
Discover our powerful search engine and read freely all the publications previews. With a subscription you will always have access to up to date content tailored to your needs.

Electropedia - www.electropedia.org
The world's leading online dictionary on electrotechnology, containing more than 22 000 terminological entries in English and French, with equivalent terms in 18 additional languages. Also known as the International Electrotechnical Vocabulary (IEV) online.

iTeh Standards
(https://standards.iteh.ai)
Document Preview

IEC 61788-17:2021
https://standards.iteh.ai/catalog/standards/iec/eb1c76c0-cdb0-4fb0-8316-1e59e6145b05/iec-61788-17-2021

IEC 61788-17

Edition 2.0 2021-04
REDLINE VERSION

INTERNATIONAL STANDARD

colour inside

Superconductivity –
Part 17: Electronic characteristic measurements – Local critical current density and its distribution in large-area superconducting films

iTeh Standards
(https://standards.iteh.ai)
Document Preview

IEC 61788-17:2021
https://standards.iteh.ai/catalog/standards/iec/eb1c76c0-cdb0-4fb0-8316-1e59e6145b05/iec-61788-17-2021

INTERNATIONAL
ELECTROTECHNICAL
COMMISSION

ICS 17.220.20; 29.050

ISBN 978-2-8322-9765-0

Warning! Make sure that you obtained this publication from an authorized distributor.

® Registered trademark of the International Electrotechnical Commission

CONTENTS

FOREWORD 5
INTRODUCTION 2
1 Scope 9
2 Normative references 9
3 Terms and definitions 9
4 Requirements 10
5 Apparatus 11
5.1 Measurement equipment 11
5.2 Components for inductive measurements 12
6 Measurement procedure 13
6.1 General 13
6.2 Determination of the experimental coil coefficient 13
6.3 Measurement of J_c in sample films 18
6.4 Measurement of J_c with only one frequency 18
6.5 Examples of the theoretical and experimental coil coefficients 19
7 Uncertainty in the test method 20
7.1 Major sources of systematic effects that affect the U_3 measurement 20
7.2 Effect of deviation from the prescribed value in the coil-to-film distance 21
7.3 Uncertainty in the experimental coil coefficient and the obtained J_c 22
7.4 Effects of the film edge 23
7.5 Specimen protection 23
8 Test report 23
8.1 Identification of test specimen 23
8.2 Report of J_c values 23
8.3 Report of test conditions 23
Annex A (informative) Additional information relating to Clauses 1 to 8 24
A.1 Comments on other methods for measuring the local J_c of large-area HTS films 24
A.2 Requirements 24
A.3 Theory of the third-harmonic voltage generation 25
A.4 Calculation of the induced electric fields 26
A.5 Theoretical coil coefficient k and experimental coil coefficient k' 27
A.6 Scaling of the U_3–I_0 curves and the constant-inductance criterion to determine I_{th} 27
A.7 Effects of reversible flux motion 29
Annex B (informative) Optional measurement systems 30
B.1 Overview 30
B.2 Harmonic noises arising from the power source and their reduction 31
~~Annex C (informative) Uncertainty considerations ....~~
Annex C (informative) Evaluation of the uncertainty 40
C.1 Evaluation of the uncertainty in the experimental coil coefficient 40
C.2 Uncertainty in the calculation of induced electric fields 41
C.3 Experimental results on the effect of the deviation of the coil-to-film distance 42

iTeh Standards
(https://standards.iteh.ai)
Document Preview
IEC 61788-17:2021
https://standards.iteh.ai/catalog/standards/iec/eb1c76c0-cdb0-4fb0-8316-1e59e6145b05/iec-61788-17-2021

C.4 Examples of the Type-A uncertainties of J_c and n-values, originating from the experimental uncertainty in the U_3 measurement 42
C.5 Evaluation of the uncertainty in the obtained J_c 43
C.6 Experimental results that reveal the effect of the film edge 44
Bibliography 46

Figure 1 – Diagram for an electric circuit used for inductive J_c measurement of HTS films 11
Figure 2 – Illustration showing techniques to press the sample coil to HTS films 12
Figure 3 – Example of a calibration wafer used to determine the coil coefficient 13
Figure 4 – Illustration of the sample coil and the magnetic field during measurement 15
Figure 5 – Illustration of the sample coil and its magnetic field generation 15
~~Figure 6 – Example of the normalized third-harmonic voltages (U_3/fI_0) measured with various frequencies ..... 17~~
Figure 6 – E-J characteristics measured by a transport method and the U_3 inductive method 17
Figure 7 – Illustration of coils 1 and 3 in Table 2 20
Figure 8 – The coil-factor function $F(r) = 2H_0/I_0$ calculated for the three coils 20
Figure 9 – The coil-to-film distance Z_1 dependence of the theoretical coil coefficient k 22
Figure A.1 – Illustration of the sample coil and the magnetic field during measurement 26
Figure A.2 – U_3 and U_3/I_0 plotted against I_0 in a YBCO thin film measured in applied DC magnetic fields, and the scaling observed when normalized by I_{th} (insets) 28
Figure A.3 – Example of the normalized third-harmonic voltages (U_3/fI_0) measured with various frequencies 28
Figure B.1 – Schematic diagram for the variable-RL-cancel circuit 31
Figure B.2 – Diagram for an electrical circuit used for the two-coil method 31
Figure B.3 – Harmonic noises arising from the power source 32
Figure B.4 – Noise reduction using a cancel coil with a superconducting film 32
Figure B.5 – Normalized harmonic noises (U_3/fI_0) arising from the power source 33
Figure B.6 – Normalized noise voltages after the reduction using a cancel coil with a superconducting film 33
Figure B.7 – Normalized noise voltages after the reduction using a cancel coil without a superconducting film 34
Figure B.8 – Normalized noise voltages with the two-coil system shown in Figure B.2 34
Figure C.1 – Effect of the coil position against a superconducting thin film on the measured J_c values 45

Table 1 – Specifications and theoretical coil coefficients k of sample coils 16
Table 2 – Specifications and coil coefficients of typical sample coils 19
~~Table C.1 – Output signals from two nominally identical extensometers ..... 17~~
~~Table C.2 – Mean values of two output signals ..... 17~~
~~Table C.3 – Experimental standard deviations of two output signals ..... 17~~
~~Table C.4 – Standard uncertainties of two output signals ..... 17~~
~~Table C.5 – Coefficient of variations of two output signals ..... 17~~

iTeh Standards (https://standards.iteh.ai) Document Preview
IEC 61788-17:2021
https://standards.iteh.ai/catalog/standards/sist/...-iec-61788-17-2021

Table C.1 – Uncertainty budget table for the experimental coil coefficient k' 41
Table C.2 – Examples of repeated measurements of J_C and n-values 43

iTeh Standards
(https://standards.iteh.ai)
Document Preview

IEC 61788-17:2021
https://standards.iteh.ai/catalog/standards/iec/eb1c76c0-cdb0-4fb0-8316-1e59e6145b05/iec-61788-17-2021

INTERNATIONAL ELECTROTECHNICAL COMMISSION

SUPERCONDUCTIVITY –

Part 17: Electronic characteristic measurements – Local critical current density and its distribution in large-area superconducting films

FOREWORD

1) The International Electrotechnical Commission (IEC) is a worldwide organization for standardization comprising all national electrotechnical committees (IEC National Committees). The object of IEC is to promote international co-operation on all questions concerning standardization in the electrical and electronic fields. To this end and in addition to other activities, IEC publishes International Standards, Technical Specifications, Technical Reports, Publicly Available Specifications (PAS) and Guides (hereafter referred to as "IEC Publication(s)"). Their preparation is entrusted to technical committees; any IEC National Committee interested in the subject dealt with may participate in this preparatory work. International, governmental and non-governmental organizations liaising with the IEC also participate in this preparation. IEC collaborates closely with the International Organization for Standardization (ISO) in accordance with conditions determined by agreement between the two organizations.
2) The formal decisions or agreements of IEC on technical matters express, as nearly as possible, an international consensus of opinion on the relevant subjects since each technical committee has representation from all interested IEC National Committees.
3) IEC Publications have the form of recommendations for international use and are accepted by IEC National Committees in that sense. While all reasonable efforts are made to ensure that the technical content of IEC Publications is accurate, IEC cannot be held responsible for the way in which they are used or for any misinterpretation by any end user.
4) In order to promote international uniformity, IEC National Committees undertake to apply IEC Publications transparently to the maximum extent possible in their national and regional publications. Any divergence between any IEC Publication and the corresponding national or regional publication shall be clearly indicated in the latter.
5) IEC itself does not provide any attestation of conformity. Independent certification bodies provide conformity assessment services and, in some areas, access to IEC marks of conformity. IEC is not responsible for any services carried out by independent certification bodies.
6) All users should ensure that they have the latest edition of this publication.
7) No liability shall attach to IEC or its directors, employees, servants or agents including individual experts and members of its technical committees and IEC National Committees for any personal injury, property damage or other damage of any nature whatsoever, whether direct or indirect, or for costs (including legal fees) and expenses arising out of the publication, use of, or reliance upon, this IEC Publication or any other IEC Publications.
8) Attention is drawn to the Normative references cited in this publication. Use of the referenced publications is indispensable for the correct application of this publication.
9) Attention is drawn to the possibility that some of the elements of this IEC Publication may be the subject of patent rights. IEC shall not be held responsible for identifying any or all such patent rights.

iTeh Standards
(https://standards.iteh.ai)
Document Preview
IEC 61788-17:2021
https://standards.iteh.ai/catalog/standards/iec/eb1c76c0-cdb0-4fb0-8316-1e59e6145b05/iec-61788-17-2021

This redline version of the official IEC Standard allows the user to identify the changes made to the previous edition IEC 61788-17:2013. A vertical bar appears in the margin wherever a change has been made. Additions are in green text, deletions are in strikethrough red text.

IEC 61788-17 has been prepared by IEC technical committee 90: Superconductivity. It is an International Standard.

This second edition cancels and replaces the first edition published in 2013. This edition constitutes a technical revision.

This edition includes the following a significant technical change with respect to the previous edition:

a) A simple method to calculate theoretical coil coefficient k is described in 6.2.1.

The text of this International Standard is based on the following documents:

FDIS	Report on voting
90/462/FDIS	90/464/RVD

Full information on the voting for the approval of this International Standard can be found in the report on voting indicated in the above table.

The language used for the development of this International Standard is English.

This document was drafted in accordance with ISO/IEC Directives, Part 2, and developed in accordance with ISO/IEC Directives, Part 1 and ISO/IEC Directives, IEC Supplement, available at www.iec.ch/members_experts/refdocs. The main document types developed by IEC are described in greater detail at www.iec.ch/standardsdev/publications.

iTeh Standards
(https://standards.iteh.ai)
Document Preview

A list of all the parts of the IEC 61788 series, published under the general title *Superconductivity*, can be found on the IEC website.

The committee has decided that the contents of this document will remain unchanged until the stability date indicated on the IEC website under "http://webstore.iec.ch" in the data related to the specific document. At this date, the document will be

https://standards.iteh.ai/catalog/standards/sist/...-8316-1e59e6145b05/iec-61788-17-2021

- reconfirmed,
- withdrawn,
- replaced by a revised edition, or
- amended.

IMPORTANT – The 'colour inside' logo on the cover page of this publication indicates that it contains colours which are considered to be useful for the correct understanding of its contents. Users should therefore print this document using a colour printer.

INTRODUCTION

Over thirty years after their discovery in 1986, high-temperature superconductors are now finding their way into products and technologies that will revolutionize information transmission, transportation, and energy. Among them, high-temperature superconducting (HTS) microwave filters, which exploit the extremely low surface resistance of superconductors, have already been commercialized. They have two major advantages over conventional non-superconducting filters, namely: low insertion loss (low noise characteristics) and high frequency selectivity (sharp cut) [1][1]. These advantages enable a reduced number of base stations, improved speech quality, more efficient use of frequency bandwidths, and reduced unnecessary radio wave noise.

Large-area superconducting thin films have been developed for use in microwave devices [2]. They are also ~~used~~ considered for use in emerging superconducting power devices, such as resistive-type superconducting fault-current limiters (SFCLs) [3] [4] [5], superconducting fault detectors used for superconductor-triggered fault current limiters [6] [7] and persistent-current switches used for persistent-current HTS magnets [8] [9]. The critical current density J_c is one of the key parameters that describe the quality of large-area HTS films. Nondestructive, AC inductive methods are widely used to measure J_c and its distribution for large-area HTS films [10] [11] [12] [13], among which the method utilizing third-harmonic voltages $U_3\cos(3\omega t + \theta)$ is the most popular [10] [11], where ω, t and θ denote the angular frequency, time, and initial phase, respectively. However, these conventional methods are not accurate because they have not considered the electric-field E criterion of the J_c measurement [14] [15] and sometimes use an inappropriate criterion to determine the threshold current I_{th} from which J_c is calculated [16]. A conventional method can obtain J_c values that differ from the accurate values by 10 % to 20 % [15]. It is thus ~~necessary~~ important to establish standard test methods to precisely measure the local critical current density and its distribution, to which all involved in the HTS filter industry can refer for quality control of the HTS films. Background knowledge on the inductive J_c measurements of HTS thin films is summarized in Annex A.

In these inductive methods, AC magnetic fields are generated with AC currents $I_0\cos\omega t$ in a small coil mounted just above the film, and J_c is calculated from the threshold coil current I_{th}, at which full penetration of the magnetic field to the film is achieved [17]. For the inductive method using third-harmonic voltages U_3, U_3 is measured as a function of I_0, and the I_{th} is determined as the coil current I_0 at which U_3 starts to emerge. The induced electric fields E in the superconducting film at $I_0 = I_{th}$, which are proportional to the frequency f of the AC current, can be estimated by a simple Bean model [14]. A standard method has been proposed to precisely measure J_c with an electric-field criterion by detecting U_3 and obtaining the n-value (index of the power-law E-J characteristics) by measuring I_{th} precisely at various frequencies [14] [15] [18] [19]. This method not only obtains precise J_c values, but also facilitates the detection of degraded parts in inhomogeneous specimens, because the decline of n-value is more ~~remarkable~~ noticeable than the decrease of J_c in such parts [15]. It is noted that this standard method is excellent for assessing homogeneity in large-area HTS films, although the relevant parameter for designing microwave devices is not J_c, but the surface resistance. For application of large-area superconducting thin films to SFCLs, knowledge on J_c distribution is vital, because J_c distribution significantly affects quench distribution in SFCLs during faults.

The International Electrotechnical Commission (IEC) draws attention to the fact that it is claimed that compliance with this document may involve the use of a patent ~~concerning the determination of the *E-J* characteristics by inductive J_c measurements as a function of frequency, given in the Introduction, Clause 1, Clause 4 and 5.1~~. IEC takes no position concerning the evidence, validity, and scope of this patent right.

[1] Numbers in square brackets refer to the Bibliography.

The holder of this patent right has assured IEC that s/he is willing to negotiate licences ~~free of charge~~ under reasonable and non-discriminatory terms and conditions with applicants throughout the world. In this respect, the statement of the holder of this patent right is registered with IEC. Information may be obtained from the patent database available at http://patents.iec.ch.

~~Name of holder of patent right:~~
~~National Institute of Advanced Industrial Science and Technology~~

~~Address:~~
~~Intellectual Property Planning Office, Intellectual Property Department~~
~~1-1-1, Umezono, Tsukuba, Ibaraki Prefecture, Japan~~

Attention is drawn to the possibility that some of the elements of this document may be the subject of patent rights other than those ~~identified above~~ in the patent database. IEC shall not be held responsible for identifying any or all such patent rights.

~~ISO (www.iso.org/patents) and IEC (http://patents.iec.ch) maintain on-line data bases of patents relevant to their standards. Users are encouraged to consult the data bases for the most up to date information concerning patents.~~

iTeh Standards
(https://standards.iteh.ai)
Document Preview

IEC 61788-17:2021
https://standards.iteh.ai/catalog/standards/iec/eb1c76c0-cdb0-4fb0-8316-1e59e6145b05/iec-61788-17-2021

SUPERCONDUCTIVITY –

Part 17: Electronic characteristic measurements – Local critical current density and its distribution in large-area superconducting films

1 Scope

This part of IEC 61788 ~~describes~~ specifies the measurements of the local critical current density (J_c) and its distribution in large-area high-temperature superconducting (HTS) films by an inductive method using third-harmonic voltages. The most important consideration for precise measurements is to determine J_c at liquid nitrogen temperatures by an electric-field criterion and obtain current-voltage characteristics from its frequency dependence. Although it is possible to measure J_c in applied DC magnetic fields [20] [21], the scope of this document is limited to the measurement without DC magnetic fields.

This technique intrinsically measures the critical sheet current that is the product of J_c and the film thickness d. The range and measurement resolution for $J_c d$ of HTS films are as follows.

– $J_c d$: from 200 A/m to 32 kA/m (based on results, not limitation).

– Measurement resolution: 100 A/m (based on results, not limitation).

iTeh Standards
(https://standards.iteh.ai)
Document Preview

2 Normative references

The following documents are referred to in the text in such a way that some or all of their content constitutes requirements of this document. For dated references, only the edition cited applies. For undated references, the latest edition of the referenced document (including any amendments) applies.

https://standards.iteh.ai/catalog/standards/iec/eb1c76c0-cdb0-4fb0-8316-1e59e6145b05/iec-61788-17-2021

~~IEC 60050 (all parts), *International Electrotechnical Vocabulary* (available at http://www.electropedia.org<http://www.electropedia.org>)~~

IEC 60050-815, *International Electrotechnical Vocabulary – Part 815: Superconductivity* (available at <http://www.electropedia.org>)

3 Terms and definitions

For the purposes of this document, the terms and definitions given in IEC 60050-815~~:2000~~ apply, some of which are repeated here for convenience.

ISO and IEC maintain terminological databases for use in standardization at the following addresses:

- IEC Electropedia: available at http://www.electropedia.org/
- ISO Online browsing platform: available at http://www.iso.org/obp

3.1
critical current
I_c
maximum direct current that can be regarded as flowing without resistance practically

Note 1 to entry: I_c is a function of magnetic field strength, temperature and strain.

[SOURCE: IEC 60050-815:~~2000~~2015, 815-~~03~~12-01]

3.2
critical current criterion
I_c criterion
criterion to determine the critical current, I_c, based on the electric field strength, E, or the resistivity, ρ

Note 1 to entry: E = 10 µV/m or E = 100 µV/m is often used as electric field criterion, and $\rho = 10^{-14}$ Ω · m or $\rho = 10^{-13}$ Ω · m is often used as resistivity criterion. ~~("*E* = 10 V/m or *E* = 100 V/m" in the current edition is mistaken and is scheduled to be corrected in the second edition).~~

[SOURCE: IEC 60050-815:~~2000~~2015, 815-~~03~~12-02]

3.3
critical current density
J_c
electric current density at the critical current using either the cross-section of the whole conductor (overall) or of the non-stabilizer part of the conductor if there is a stabilizer

Note 1 to entry: The overall current density is called engineering current density (symbol: J_e).

[SOURCE: IEC 60050-815:~~2000~~2015, 815-~~03~~12-03]

iTeh Standards
(https://standards.iteh.ai)
Document Preview

3.4
transport critical current density
J_{ct}
critical current density obtained by a resistivity or a voltage measurement

[SOURCE: IEC 60050-815:~~2000~~2015, 815-~~03~~12-04]

IEC 61788-17:2021
https://standards.iteh.ai/catalog/standards/iec/eb1c76c0-cdb0-4fb0-8316-1e59e6145b05/iec-61788-17-2021

3.5
***n*-value**
<superconductor> exponent obtained in a specific range of electric field strength or resistivity when the voltage/current U (I) curve is approximated by the equation $U \propto I^n$

[SOURCE: IEC 60050-815:~~2000~~2015, 815-~~03~~12-10]

4 Requirements

The critical current density J_c is one of the most fundamental parameters that describe the quality of large-area HTS films. In this document, J_c and its distribution are measured non-destructively via an inductive method by detecting third-harmonic voltages $U_3\cos(3\omega t + \theta)$. A small coil, which is used both to generate AC magnetic fields and detect third-harmonic voltages, is mounted just above the HTS film and used to scan the measuring area. To measure J_c precisely with an electric-field criterion, the threshold coil currents I_{th}, at which U_3 starts to emerge, are measured repeatedly at different frequencies and the E-J characteristics are determined from their frequency dependencies.

The target relative combined standard uncertainty in the method used to determine the absolute value of J_c is less than 10 %. However, the target uncertainty is less than 5 % for the purpose of evaluating the homogeneity of J_c distribution in large-area superconducting thin films.

5 Apparatus

5.1 Measurement equipment

Figure 1 shows a schematic diagram of a typical electric circuit used for the third-harmonic voltage measurements. This circuit is comprised of a signal generator, power amplifier, digital multimeter (DMM) to measure the coil current, band-ejection filter to reduce the fundamental wave signals and lock-in amplifier to measure the third-harmonic signals. It involves the single-coil approach in which the coil is used to generate an AC magnetic field and detect the inductive voltage. This method can also be applied to double-sided superconducting thin films ~~without hindrance~~ with no obstacles. In the methods proposed here, however, there is an additional system to reduce harmonic noise voltages generated from the signal generator and the power amplifier [14]. In an example of Figure 1, a cancel coil of specification being the same as the sample coil is used for cancelling. The sample coil is mounted just above the superconducting film, and a superconducting film with a $J_c d$ sufficiently larger than that of the sample film is placed below the cancel coil to adjust its inductance to that of the sample coil. Note that the inductance of the sample coil decreases by 20 % to 30 % due to the superconducting shielding current when it is mounted on a superconducting film. Both coils and superconducting films are immersed in liquid nitrogen (a broken line in Figure 1). Other optional measurement systems are described in Annex B.

NOTE In this circuit, coil currents of about 0,1 A (RMS) and power source voltages of > 6 V (RMS) are needed to measure the superconducting film of $J_c d \approx 10$ kA/m while using coil 1 or 2 of Table 2. A precision power amplifier~~, such as NF: HSA4011,~~ with sufficiently high power is ~~necessary~~ used to supply such large currents and voltages.

iTeh Standards (https://standards.iteh.ai) Document Preview
IEC 61788-17:2021
https://standards.iteh.ai/catalog/standards/iec/eb1c76e6-[illegible]-1e59e6145b05/iec-61788-17-2021

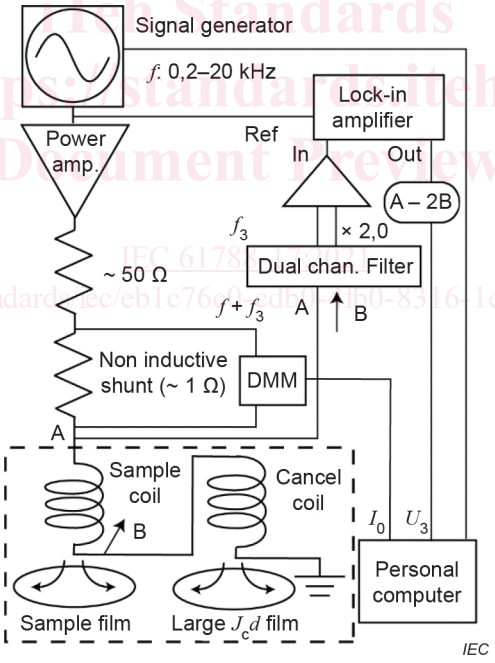

NOTE The broken line surrounds elements immersed in liquid nitrogen.

Figure 1 – Diagram for an electric circuit used for inductive J_c measurement of HTS films

5.2 Components for inductive measurements

5.2.1 Coils

Currently available large-area HTS films are deposited on areas as large as about 25 cm in diameter, while films about 5 cm in diameter are commercially used to prepare microwave filters [22]. Larger $YBa_2Cu_3O_7$ (YBCO) films, about 10 cm in diameter and 2,7 cm × 20 cm, were used to fabricate fault current limiter modules [3] [4] [5]. For the J_c measurements of such films, the appropriate outer diameter of the sample coils ranges from 2 mm to 5 mm. The requirement for the sample coil is to generate as high a magnetic field as possible at the upper surface of the superconducting film, for which flat coil geometry is suitable. Typical specifications are as follows.

a) Inner winding diameter D_1: 0,9 mm, outer diameter D_2: 4,2 mm, height h: 1,0 mm, 400 turns of a 50 µm diameter copper wire.

b) D_1: 0,8 mm, D_2: 2,2 mm, h: 1,0 mm, 200 turns of a 50 µm diameter copper wire.

5.2.2 Spacer film

Typically, a polyimide film with a thickness of 50 µm to 125 µm is used to protect the HTS films. The coil has generally some protection layer below the coil winding, which also insulates the thin film from Joule heat in the coil. The typical thickness is 100 µm to 150 µm, and the coil-to-film distance Z_1 is kept to be 200 µm.

5.2.3 Mechanism for the set-up of the coil

To maintain a prescribed value for the spacing Z_1 between the bottom of the coil winding and the film surface, the sample coil should be pressed to the film with sufficient pressure, typically exceeding about 0,2 MPa [18]. Techniques to achieve this are to use a weight or spring, as shown in Figure 2. The system schematically shown in the figure left is used to scan a wide area of the film. Before the U_3 measurement the coil is initially ~~moved~~ raised up to some distance, moved laterally to the target position, and then ~~moved~~ lowered down and pressed to the film. An appropriate pressure should be determined so that too high pressure does not damage the bobbin, coil, HTS thin film or the substrate. It is reported that the YBCO deposited on biaxially-textured pure Ni substrate was degraded by transverse compressive stress of about 20 MPa [23].

iTeh Standards (https://standards.iteh.ai) Document Preview

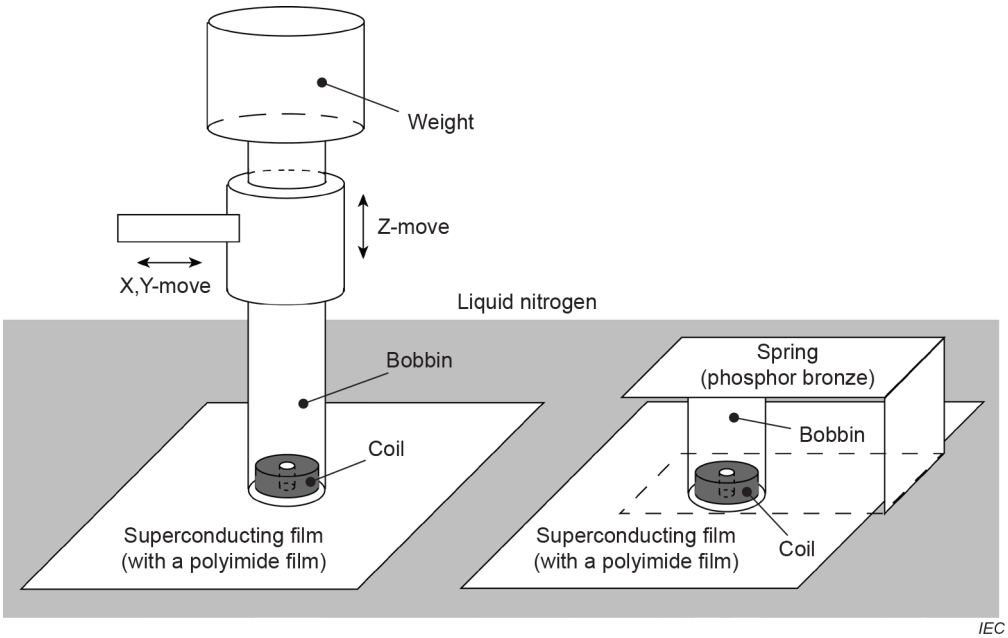

Figure 2 – Illustration showing techniques to press the sample coil to HTS films