IEC 62682

Edition 2.0 2022-12
COMMENTED VERSION

INTERNATIONAL STANDARD

colour inside

Management of alarm systems for the process industries

iTeh STANDARD PREVIEW
(standards.iteh.ai)
IEC 62682:2022
https://standards.iteh.ai/catalog/standards/sist/9189a77a-c715-42c2-8f7f-4286cdff587d/iec-62682-2022

IEC 62682:2022-12 CMV(en)

THIS PUBLICATION IS COPYRIGHT PROTECTED
Copyright © 2022 IEC, Geneva, Switzerland

All rights reserved. Unless otherwise specified, no part of this publication may be reproduced or utilized in any form or by any means, electronic or mechanical, including photocopying and microfilm, without permission in writing from either IEC or IEC's member National Committee in the country of the requester. If you have any questions about IEC copyright or have an enquiry about obtaining additional rights to this publication, please contact the address below or your local IEC member National Committee for further information.

IEC Secretariat
3, rue de Varembé
CH-1211 Geneva 20
Switzerland

Tel.: +41 22 919 02 11
info@iec.ch
www.iec.ch

About the IEC
The International Electrotechnical Commission (IEC) is the leading global organization that prepares and publishes International Standards for all electrical, electronic and related technologies.

About IEC publications
The technical content of IEC publications is kept under constant review by the IEC. Please make sure that you have the latest edition, a corrigendum or an amendment might have been published.

IEC publications search - webstore.iec.ch/advsearchform
The advanced search enables to find IEC publications by a variety of criteria (reference number, text, technical committee, …). It also gives information on projects, replaced and withdrawn publications.

IEC Just Published - webstore.iec.ch/justpublished
Stay up to date on all new IEC publications. Just Published details all new publications released. Available online and once a month by email.

IEC Customer Service Centre - webstore.iec.ch/csc
If you wish to give us your feedback on this publication or need further assistance, please contact the Customer Service Centre: sales@iec.ch.

IEC Products & Services Portal - products.iec.ch
Discover our powerful search engine and read freely all the publications previews. With a subscription you will always have access to up to date content tailored to your needs.

Electropedia - www.electropedia.org
The world's leading online dictionary on electrotechnology, containing more than 22 300 terminological entries in English and French, with equivalent terms in 19 additional languages. Also known as the International Electrotechnical Vocabulary (IEV) online.

iTeh STANDARDS PREVIEW
(standards.iteh.ai)
IEC 62682:2022
https://standards.iteh.ai/catalog/standards/sist/9189a77a-c715-42c2-8f7f-4286cdff587d/iec-62682-2022

IEC 62682

Edition 2.0 2022-12
COMMENTED VERSION

INTERNATIONAL STANDARD

colour inside

iTeh STANDARD PREVIEW
(standards.iteh.ai)
IEC 62682:2022
https://standards.iteh.ai/catalog/standards/sist/9189a77a-c715-42c2-8f7f-4286cdff587d/iec-62682-2022

Management of alarm systems for the process industries

INTERNATIONAL
ELECTROTECHNICAL
COMMISSION

ICS 13.320; 25.040.40

ISBN 978-2-8322-6270-2

Warning! Make sure that you obtained this publication from an authorized distributor.

® Registered trademark of the International Electrotechnical Commission

CONTENTS

FOREWORD 9
INTRODUCTION 11
1 Scope 12
1.1 General applicability 12
1.2 Exclusions and inclusions 14
1.2.1 Operators 14
1.2.2 Process sensors and final control elements 14
1.2.3 Annunciators 14
1.2.4 Human machine interface 14
1.2.5 Safety instrumented systems 14
1.2.6 Fire and gas detection and protective systems 14
1.2.7 Security systems 14
1.2.8 Packaged systems 14
1.2.9 Event data 15
1.2.10 Alarm identification methods 15
1.2.11 Management of change 15
1.2.12 Purchase specification 15
2 Normative references 15
3 Terms, definitions and abbreviated terms 15
3.1 Terms and definitions 15
3.2 Abbreviated terms 25
4 Conformance to this document 26
4.1 Conformance guidance 26
4.2 Existing systems 26
4.3 Use of required functionalities 26
4.4 Responsibility 26
4.5 Local Jurisdictions 26
5 Alarm system models 26
5.1 Alarm systems 26
5.2 Alarm management life cycle 26
5.2.1 Alarm management life cycle model 26
5.2.2 Alarm management life cycle stages 28
5.2.3 Alarm management life cycle entry points 31
5.2.4 Simultaneous and encompassing stages 31
5.2.5 Alarm management life cycle loops 31
5.2.6 Alarm management life cycle stage inputs and outputs 32
5.3 Alarm states 33
5.3.1 Alarm state transition diagram 33
5.3.2 Alarm states 35
5.3.3 Alarm state transition paths 37
5.4 Alarm response timeline 38
5.4.1 General 38
5.4.2 Normal (A) 39
5.4.3 Unacknowledged (B) 39
5.4.4 Acknowledged (C) and response 39
5.4.5 Return-to-normal (D) 40

iTeh STANDARD PREVIEW
(standards.iteh.ai)
IEC 62682:2022
https://standards.iteh.ai/catalog/standards/sist/9189a77a-e715-42c2-8f7f-4286cdff587d/iec-62682-2022

5.4.6 Allowable response time 40
5.4.7 Alarm setpoint 40
5.4.8 Consequence threshold 40
5.4.9 Alarm deadband 40
5.5 Feedback model of operator-process interaction 40
5.5.1 General 40
5.5.2 Detect 41
5.5.3 Diagnose 41
5.5.4 Respond 41
5.5.5 Performance shaping factors 41
6 Alarm philosophy 42
6.1 Purpose 42
6.2 Alarm philosophy contents 42
6.2.1 General 42
6.2.2 Purpose of alarm system 43
6.2.3 Definitions 43
6.2.4 References 43
6.2.5 Roles and responsibilities for alarm management 43
6.2.6 Alarm design principles 44
6.2.7 Alarm setpoint determination 44
6.2.8 Prioritization method 44
6.2.9 Alarm class definition 44
6.2.10 Highly managed alarms 44
6.2.11 Rationalization 45
6.2.12 Alarm documentation 45
6.2.13 Alarm design guidance 45
6.2.14 Specific alarm design considerations 46
6.2.15 HMI design principles 46
6.2.16 Approved enhanced and advanced alarming techniques 46
6.2.17 Implementation guidance 46
6.2.18 Alarm response procedures 46
6.2.19 Training 47
6.2.20 Alarm shelving 47
6.2.21 Alarm system maintenance 47
6.2.22 Testing of ~~the alarm system~~ alarms 47
6.2.23 Alarm system performance monitoring 47
6.2.24 Alarm history preservation 48
6.2.25 Management of change 48
6.2.26 Alarm ~~system~~ management audit 48
6.2.27 Related site procedures 48
6.3 Alarm philosophy development and maintenance 49
7 Alarm system requirements specification 49
7.1 Purpose 49
7.2 Recommendations 49
7.3 Development 50
7.4 Systems evaluation 50
7.5 Packaged systems 50
7.6 Customization 50
7.7 Alarm system requirements ~~testing~~ verification 51

iTeh STANDARD PREVIEW
(standards.iteh.ai)
IEC 62682:2022
https://standards.iteh.ai/catalog/standards/sist/9189a77a-c715-42c2-8f7f-4286cdff587d/iec-62682-2022

8 Identification 51
8.1 Purpose 51
8.2 Alarm identification methods 51
8.3 Identification training 51
8.4 Identification documentation 51
9 Rationalization 52
9.1 Purpose 52
9.2 Rationalization documentation 52
9.2.1 Rationalization documentation requirements 52
9.2.2 Rationalization documentation recommendations 52
9.2.3 Plant states 53
9.3 Alarm justification 53
9.3.1 Alarm justification process 53
9.3.2 Justification approach 53
9.3.3 Individual alarm justification 53
9.3.4 Impact on alarm system performance 54
9.4 Alarm setpoint determination 54
9.5 Prioritization 54
9.6 Classification 54
9.7 Review 55
9.8 Removal of rejected alarms 55
9.9 ~~Use of~~ Documentation 55
10 Detailed design: basic alarm design 55
10.1 Purpose 55
10.2 Basic alarm design capabilities 55
10.3 Usage of alarm states 55
10.3.1 Alarm state triggering 55
10.3.2 Alarm states and other logic functions 56
10.3.3 Alarm suppression and other logic functions 56
10.4 Alarm types 56
10.5 Alarm attributes 56
10.5.1 General 56
10.5.2 Alarm description 57
10.5.3 Alarm setpoints 57
10.5.4 Alarm priority 57
10.5.5 Alarm deadbands 57
10.5.6 Alarm on-delay and off-delay 58
10.6 Programmatic changes to alarm attributes 58
10.7 Review of basic alarm design 58
11 Detailed design: human-machine interface design for alarm systems 58
11.1 Purpose 58
11.2 HMI functions 59
11.2.1 General 59
11.2.2 HMI information requirements 59
11.2.3 HMI functional requirements 59
11.2.4 HMI functional recommendations 59
11.2.5 HMI display requirements 59
11.2.6 Alarm records requirements 59

iTeh STANDARD PREVIEW
(standards.iteh.ai)
IEC 62682:2022
https://standards.iteh.ai/catalog/standards/sist/9189a77a-c715-42c2-8f7f-4286cdff587d/iec-62682-2022

11.2.7 Alarm records recommendations 60
11.3 Alarm states indications 60
11.3.1 General 60
11.3.2 Required alarm state indications 60
11.3.3 Recommended alarm state indications 60
11.3.4 Audible alarm state indications 62
11.4 Alarm priority indications 62
11.4.1 General 62
11.4.2 Alarm priority indication requirements 62
11.4.3 Colour alarm priority indications requirements 62
11.4.4 Recommended alarm priority indications 62
11.5 Alarm message indications 63
11.5.1 General 63
11.5.2 Recommended alarm message indications 63
11.6 Alarm displays 63
11.6.1 General 63
11.6.2 Alarm summary display 64
11.6.3 Alarm summary status 65
11.6.4 Alarm log displays 65
11.6.5 Process displays 66
11.6.6 Tag detail displays 66
11.6.7 Other ~~display~~ graphic elements 66
11.7 Alarm shelving 66
11.7.1 General 66
11.7.2 Alarm shelving functional requirements 66
11.7.3 Alarm shelving functional recommendations 67
11.7.4 Shelved alarm displays 67
11.8 Out-of-service alarms 68
11.8.1 General 68
11.8.2 Out-of-service alarm functional requirements 68
11.8.3 Out-of-service alarm displays 68
11.9 Alarms suppressed by design 69
11.9.1 General 69
11.9.2 Designed suppression functional requirements 69
11.9.3 Designed suppression functional recommendations 69
11.9.4 Suppressed-by-design displays 69
11.10 Alarm annunciator integration 70
11.10.1 General 70
11.10.2 Alarm annunciator integration recommendations 70
11.10.3 Alarm annunciator display integration recommendations 70
11.11 Safety related alarm HMI 70
11.11.1 General 70
11.11.2 Independent safety related alarm HMI 70
12 Detailed design: enhanced and advanced ~~alarm methods~~ alarming 70
12.1 Purpose 70
12.2 Basis of enhanced and advanced alarming 71
12.2.1 General 71
12.2.2 Effort, manpower requirements and complexity 71
12.3 Information linking 71

iTeh STANDARD PREVIEW
(standards.iteh.ai)

12.4 Logic-based alarming 71
12.4.1 General 71
12.4.2 Alarm attribute modification 72
12.4.3 Externally enabled systems 72
12.4.4 Logical alarm suppression and attribute modification 72
12.4.5 State-based alarming 72
12.5 Model-based alarming 72
12.6 Additional alarming considerations 72
12.6.1 General 72
~~12.6.2 Non-control room considerations~~ .....
12.6.2 Remote alarm systems 73
12.6.3 Supplementary alarm systems 73
12.6.4 Batch process considerations 73
12.7 Training, testing, and auditing systems 74
12.8 Alarm attribute enforcement 74
13 Implementation 74
13.1 Purpose 74
13.2 Implementation planning 74
13.3 Implementation training 74
13.3.1 General 74
13.3.2 Implementation training requirements for new or modified alarms 74
~~13.3.3 Implementation training requirements~~ .....
13.3.3 Training documentation requirements for new or modified highly managed alarms 75
13.3.4 Training documentation recommendations for new or modified alarms 75
13.3.5 Implementation training requirements for new or modified alarm systems 75
13.3.6 Implementation training recommendations for new or modified alarm systems 75
13.4 Implementation testing and ~~validation~~ verification 75
13.4.1 General 75
13.4.2 Implementation testing requirements for highly managed alarms 75
13.4.3 Implementation testing recommendations for new or modified alarms 76
13.4.4 Implementation testing requirements for new or modified alarm systems 76
13.5 Implementation documentation 76
13.5.1 General 76
13.5.2 Documentation requirements 76
13.5.3 Implementation documentation recommendations 77
14 Operation 77
14.1 Purpose 77
14.2 Alarm response procedures 77
14.2.1 Alarm response procedures requirements 77
14.2.2 Alarm response procedure recommendations 77
14.3 Alarm shelving 78
14.3.1 Alarm shelving requirements 78
14.3.2 Alarm shelving for highly managed alarms 78
14.3.3 Alarm shelving recommendations 78
14.3.4 Alarm shelving record requirements 78
14.3.5 Shift change procedures and alarm review 78

iTeh STANDARD PREVIEW
(standards.iteh.ai)
https://standards.iteh.ai/catalog/standards/sist/91d8a7fa-e7f5-42c2-8f74-4286cdff587d/iec-62682-2022

14.4 Refresher training for operators 78
14.4.1 Refresher training requirements for operators 78
14.4.2 Refresher training documentation requirements for highly managed alarms 78
14.4.3 Refresher training content for highly managed alarms 79
14.4.4 Refresher training recommendations for alarms 79
15 Maintenance 79
15.1 Purpose 79
15.2 Periodic alarm testing 79
15.2.1 General 79
15.2.2 Periodic alarm testing requirements 79
15.2.3 Periodic alarm testing for highly managed alarms 79
15.2.4 Periodic alarm test procedure requirements 80
15.2.5 Periodic alarm test procedure recommendations 80
15.2.6 Periodic alarm testing recommendations 80
15.3 Out-of-service alarms 80
15.3.1 General 80
15.3.2 Out-of-service process requirements 80
15.3.3 Out-of-service highly managed alarms 80
15.3.4 Out-of-service process recommendations 81
15.3.5 Requirements for returning alarms to service 81
15.4 Equipment repair 81
15.5 Equipment replacement 81
15.6 Refresher training for maintenance 81
15.6.1 General requirements 81
15.6.2 Refresher training requirements for highly managed alarms 81
15.6.3 Refresher training recommendations for alarms 81
16 Monitoring and assessment 81
16.1 Purpose 81
~~16.2 Requirements ..... ~~
~~16.3 Monitoring, assessment, audit, and benchmark ..... ~~
~~16.4 Alarm system monitoring ..... ~~
16.2 Performance monitoring requirements 82
16.3 Monitoring and assessment 82
16.3.1 General 82
16.3.2 Alarm system performance metrics 83
16.3.3 Average alarm rate per operator console 83
16.3.4 Peak alarm rate per operator console 83
16.3.5 Alarm floods 84
16.3.6 Frequently occurring alarms 84
16.3.7 Chattering and fleeting alarms 85
16.3.8 Stale alarms 85
16.3.9 Annunciated alarm priority distribution 85
16.3.10 Rationalization and alarm priority distribution 86
16.4 Unauthorized alarm suppression 86
16.5 Alarm attribute monitoring 86
16.6 Reporting of alarm system analyses 86
16.7 Alarm performance metric summary 86

iTeh STANDARD PREVIEW
(standards.iteh.ai)

17 Management of change 87
17.1 Purpose 87
17.2 Changes subject to management of change 87
17.3 Change documentation requirements 88
~~17.4 Change documentation recommendations ..... .~~
17.4 Alarm removal recommendations 88
17.5 Alarm ~~attribute modification~~ documentation review recommendations 89
18 Audit 89
18.1 Purpose 89
18.2 Benchmark 89
18.3 ~~Initial audit or benchmark~~ Audit requirements 89
18.4 Audit interviews 89
18.5 Audit process recommendations 90
18.6 Action plans 90

Bibliography 91
List of comments 92

Figure 1 – Alarm system dataflow 13
Figure 2 – Alarm management life cycle 28
Figure 3 – Alarm state transition diagram 35
Figure 4 – Alarm response timeline 39
Figure 5 – Feedback model of operator-process interaction 41

Table 1 – Alarm management life cycle stage inputs and outputs 33
Table 2 – Summary of alarm states 37
Table 3 – Required and recommended alarm philosophy contents 42
Table 4 – Recommended alarm state indications 62
Table 5 – Average alarm rates 83
Table 6 – Example annunciated alarm priority distribution 85
Table 7 – Recommended alarm performance metrics summary 87

iTeh STANDARD PREVIEW
(standards.iteh.ai)
IEC 62682:2022
https://standards.iteh.ai/catalog/standards/sist/9189a77a-c715-42c2-8f7f-4286cdff587d/iec-62682-2022

INTERNATIONAL ELECTROTECHNICAL COMMISSION

_____

MANAGEMENT OF ALARM SYSTEMS FOR THE PROCESS INDUSTRIES

FOREWORD

1) The International Electrotechnical Commission (IEC) is a worldwide organization for standardization comprising all national electrotechnical committees (IEC National Committees). The object of IEC is to promote international co-operation on all questions concerning standardization in the electrical and electronic fields. To this end and in addition to other activities, IEC publishes International Standards, Technical Specifications, Technical Reports, Publicly Available Specifications (PAS) and Guides (hereafter referred to as “IEC Publication(s)”). Their preparation is entrusted to technical committees; any IEC National Committee interested in the subject dealt with may participate in this preparatory work. International, governmental and non-governmental organizations liaising with the IEC also participate in this preparation. IEC collaborates closely with the International Organization for Standardization (ISO) in accordance with conditions determined by agreement between the two organizations.
2) The formal decisions or agreements of IEC on technical matters express, as nearly as possible, an international consensus of opinion on the relevant subjects since each technical committee has representation from all interested IEC National Committees.
3) IEC Publications have the form of recommendations for international use and are accepted by IEC National Committees in that sense. While all reasonable efforts are made to ensure that the technical content of IEC Publications is accurate, IEC cannot be held responsible for the way in which they are used or for any misinterpretation by any end user.
4) In order to promote international uniformity, IEC National Committees undertake to apply IEC Publications transparently to the maximum extent possible in their national and regional publications. Any divergence between any IEC Publication and the corresponding national or regional publication shall be clearly indicated in the latter.
5) IEC itself does not provide any attestation of conformity. Independent certification bodies provide conformity assessment services and, in some areas, access to IEC marks of conformity. IEC is not responsible for any services carried out by independent certification bodies.
6) All users should ensure that they have the latest edition of this publication.
7) No liability shall attach to IEC or its directors, employees, servants or agents including individual experts and members of its technical committees and IEC National Committees for any personal injury, property damage or other damage of any nature whatsoever, whether direct or indirect, or for costs (including legal fees) and expenses arising out of the publication, use of, or reliance upon, this IEC Publication or any other IEC Publications.
8) Attention is drawn to the Normative references cited in this publication. Use of the referenced publications is indispensable for the correct application of this publication.
9) Attention is drawn to the possibility that some of the elements of this IEC Publication may be the subject of patent rights. IEC shall not be held responsible for identifying any or all such patent rights.

iTeh STANDARD PREVIEW
(standards.iteh.ai)
IEC 62682:2022
https://standards.iteh.ai/catalog/standards/sist/9189a75a-c715-42c2-8f7f-4286cdf587d/iec-62682-2022

This commented version (CMV) of the official standard IEC 62682:2022 edition 2.0 allows the user to identify the changes made to the previous IEC 62682:2014 edition 1.0. Furthermore, comments from IEC SC 65A experts are provided to explain the reasons of the most relevant changes, or to clarify any part of the content.

A vertical bar appears in the margin wherever a change has been made. Additions are in green text, deletions are in strikethrough red text. Experts' comments are identified by a blue-background number. Mouse over a number to display a pop-up note with the comment.

This publication contains the CMV and the official standard. The full list of comments is available at the end of the CMV.

IEC 62682 has been prepared by subcommittee 65A: System aspects, of IEC technical committee 65: Industrial-process measurement, control and automation. It is an International Standard.

This second edition cancels and replaces the first edition published in 2014. This edition constitutes a technical revision.

This edition includes minor technical changes with respect to the previous edition, based on changes to ANSI/ISA-18.2:2016. These include the inclusion of packaged systems in the scope (Clause 1), definitions (Clause 3) and alarm system requirements specification (Clause 7). There are changes to improve clarity in wording throughout the document.

The text of this International Standard is based on the following documents:

Draft	Report on voting
65A/1046/FDIS	65A/1064/RVD

Full information on the voting for its approval can be found in the report on voting indicated in the above table.

The language used for the development of this International Standard is English.

iTeh STANDARD PREVIEW
(standards.iteh.ai)

This document was drafted in accordance with ISO/IEC Directives, Part 2, and developed in accordance with ISO/IEC Directives, Part 1 and ISO/IEC Directives, IEC Supplement, available at www.iec.ch/members_experts/refdocs. The main document types developed by IEC are described in greater detail at www.iec.ch/standardsdev/publications.

The committee has decided that the contents of this document will remain unchanged until the stability date indicated on the IEC website under "http://webstore.iec.ch" in the data related to the specific document. At this date, the document will be

- reconfirmed,
- withdrawn,
- replaced by a revised edition, or
- amended.

IMPORTANT – The "colour inside" logo on the cover page of this document indicates that it contains colours which are considered to be useful for the correct understanding of its contents. Users should therefore print this document using a colour printer.

INTRODUCTION

~~Purpose~~

This International Standard addresses the development, design, installation, and management of alarm systems in the process industries. Alarm management includes multiple work processes throughout the alarm ~~system~~ management life cycle. This document defines the terminology and models to develop an alarm system, and it defines the work processes recommended to effectively maintain the alarm ~~system~~ throughout the life cycle. Ineffective alarm systems have often been cited as contributing factors in the investigation reports following major process incidents. This document is intended to provide a methodology that will result in the improved safety, quality, and operation in the process industries.

The first edition of this document was adapted from ANSI/ISA-18.2-2009, *Management of Alarm Systems for the Process Industries*, an International Society of Automation (ISA) standard, and with due consideration of other guidance documents that have been developed throughout industry. This second edition has incorporated some changes made in ANSI/ISA-18.2-2016.

This document is not the first effort to define terminology and practices for effective alarm systems. In 1999 the Engineering Equipment and Materials Users' Association (EEMUA) issued Publication 191, *Alarm Systems: A Guide to Design, Management and Procurement*, with the 2nd edition published in 2007 and the 3rd edition published in 2013. In 2003 the User Association of Process Control Technology in Chemical and Pharmaceutical Industries (NAMUR) issued worksheet NA 102, *Alarm Management*, which was updated in 2008. During the development and maintenance of this document, every effort was made to keep terminology and practices consistent with the previous work of these respected organizations and committees.

iTeh STANDARD PREVIEW
(standards.iteh.ai)

This document provides requirements for alarm management and alarm systems. It is intended for those individuals and organizations that

IEC 62682:2022
https://standards.iteh.ai/catalog/standards/sist/91e9a77a-c715-42c2-8f7f-4286cdff587d/iec-62682-2022

a) manufacture or implement embedded alarm systems,
b) manufacture or ~~implement~~ install third-party alarm system software,
c) design or install alarm systems,
d) operate and ~~/or~~ maintain alarm systems, and
e) audit or assess alarm system performance.

~~Organization~~

This document is organized in ~~two~~ parts. ~~The first part is introductory in nature, (Clauses 1 to 5). The main body of the standard follows (Clauses 6 to 18).~~

The first part (Clause 1 to Clause 3) are normative without any mandatory requirements. Clause 4 contains mandatory requirements. Clause 5 is normative without any mandatory requirements. The main body of the standard (Clause 6 to Clause 18), describes mandatory requirements and non-mandatory recommendations.

Within this document, mandatory requirements are stated with "shall", non-mandatory recommendations are stated with "should", and permissible requirements are stated with "may". The phase "is required" indicates the requirement has been stated previously in the document.

MANAGEMENT OF ALARM SYSTEMS FOR THE PROCESS INDUSTRIES

1 Scope

1.1 General applicability

This document specifies general principles and processes for the ~~lifecycle~~ management of alarm systems based on ~~programmable electronic controller and computer-based human-machine interface (HMI) technology~~ controls system and human-machine interfaces (HMI) **1** for facilities in the process industries. It covers all alarms to be presented to the operator through the control system, which includes alarms from basic process control systems, annunciators ~~panels~~, packaged systems, and safety instrumented systems, ~~fire and gas systems, and emergency response systems~~ **2**.

The practices in this document are applicable to continuous, batch, and discrete processes. There can be differences in implementation to meet the specific needs based on process type.

~~In jurisdictions where the governing authorities (e.g., national, federal, state, province, county, city) have established process safety design, process safety management, or other requirements, in addition to the requirements of this standard, these should be taken into consideration.~~ **3**

The primary function within the alarm system is to notify operators of abnormal process conditions or equipment malfunctions and support the response. The alarm systems can include both the basic process control system (BPCS) and the safety instrumented system (SIS), each of which uses measurements of process conditions and logic to generate alarms. Figure 1 illustrates the concepts of alarm and response dataflow through the alarm system. The alarm system also includes a mechanism for communicating the alarm information to the operator via an HMI, usually a computer screen or an annunciator ~~panel~~. Additional functions of the alarm system are an alarm and event log, an alarm historian, and the generation of performance metrics for the alarm system. There are external systems that can use the data from the alarm system.

Figure 1 is not intended to represent physical wiring. **4**

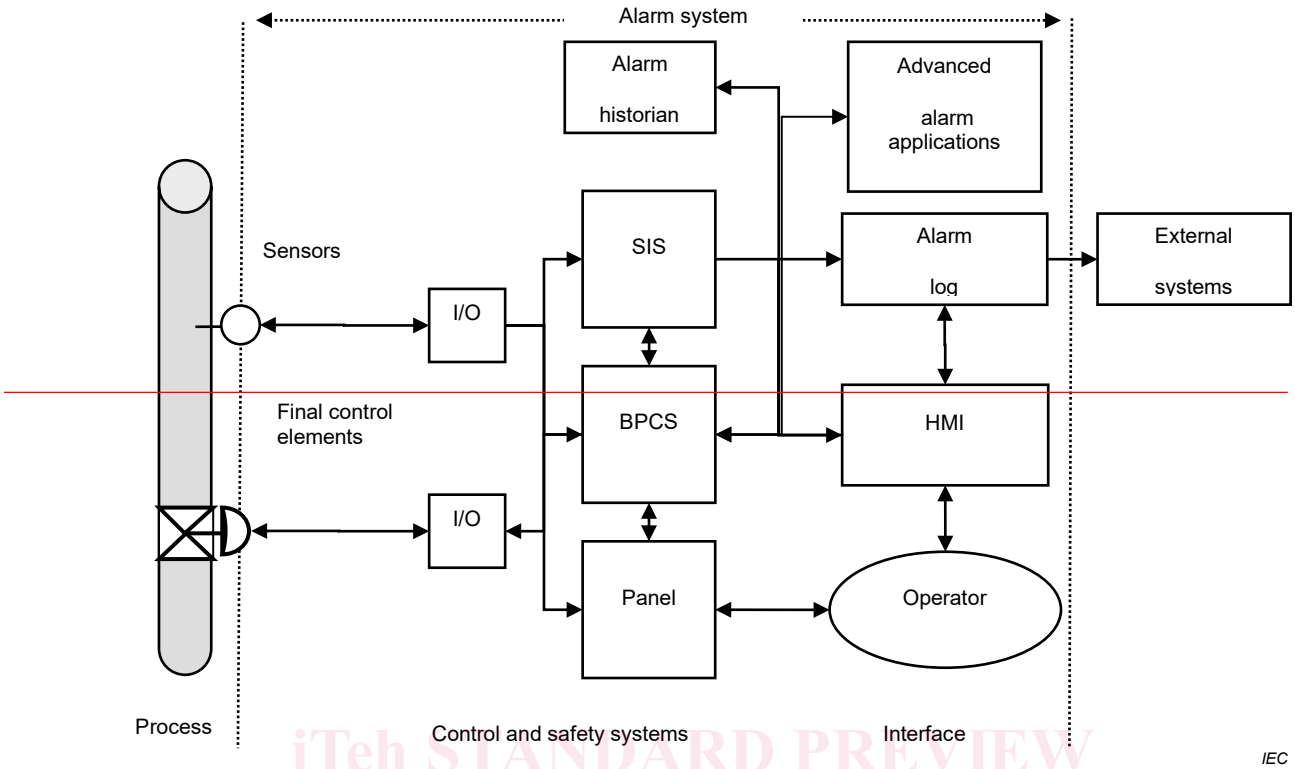

iTeh STANDARD PREVIEW
(standards.iteh.ai)

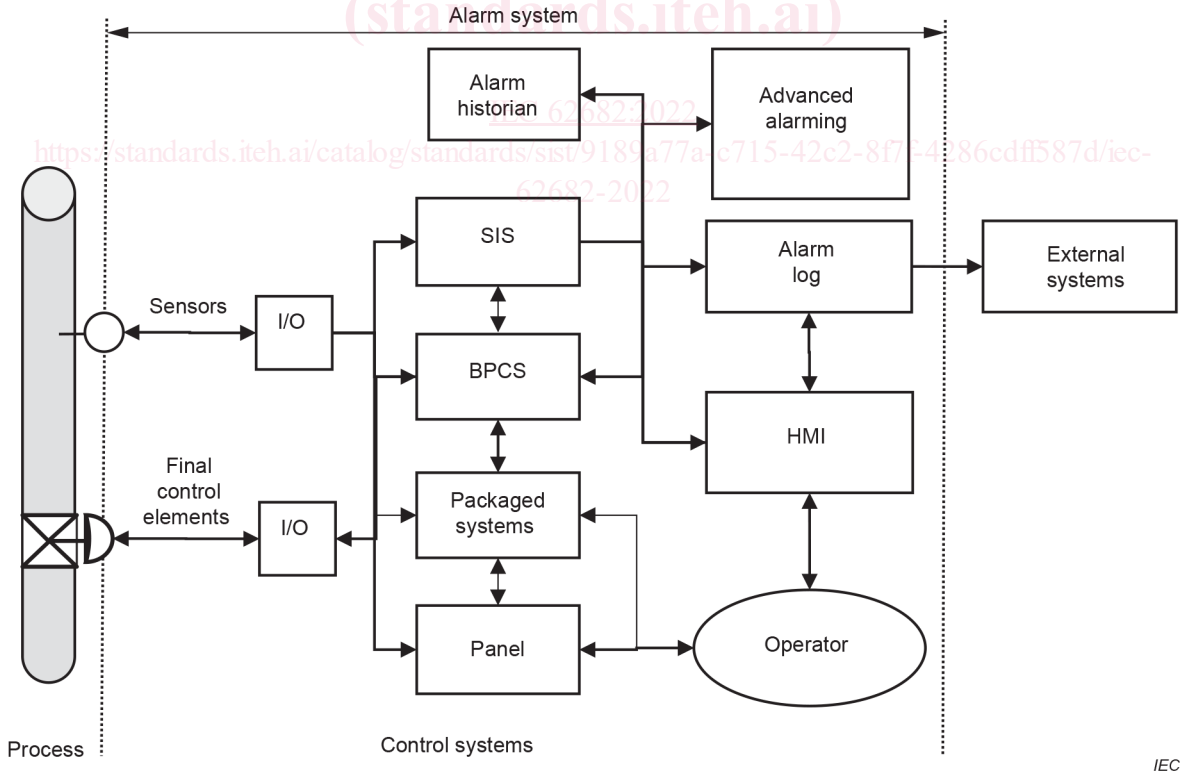

IEC 62682:2022
https://standards.iteh.ai/catalog/standards/sist/9189a77a-c715-42c2-8f78-4286cdff587d/iec-62682-2022

NOTE 1 Packaged systems (e.g., refrigeration machines) can be included in the control system.

NOTE 2 Panel can refer to annunciator panel or other panel types.

NOTE 3 The lines are intended to represent data flow and not physical wiring. 5

Figure 1 – Alarm system dataflow