# SLOVENSKI STANDARD
# SIST EN 726-6:1998

**01-junij-1998**

---

**Identification card systems - Telecommunications integrated circuit(s) cards and terminals - Part 6: Telecommunication features**

Identification card system - Telecommunications integrated circuit(s) cards and terminals - Part 6: Telecommunication features

Identifikationskartensysteme - Chipkarten und Endgeräte für Telekommunikationszwecke - Teil 6: Leistungsmerkmale

iTeh STANDARD PREVIEW
(standards.iteh.ai)

Systemes de cartes d'identification - Cartes à circuit intégré et terminaux pour les télécommunications - Partie 6: Services de télécommunications

SIST EN 726-6:1998
https://standards.iteh.ai/catalog/standards/sist/3dd30f23-e0cb-4eb8-a1df-88e3c5e6a83a/sist-en-726-6-1998

**Ta slovenski standard je istoveten z:** **EN 726-6:1995**

---

**ICS:**

| | | |
|---|---|---|
| 35.240.15 | Identifikacijske kartice in sorodne naprave | Identification cards and related devices |

**SIST EN 726-6:1998** **en**

2003-01.Slovenski inštitut za standardizacijo. Razmnoževanje celote ali delov tega standarda ni dovoljeno.

SIST EN 726-6:1998

iTeh STANDARD PREVIEW
(standards.iteh.ai)

SIST EN 726-6:1998
https://standards.iteh.ai/catalog/standards/sist/3dd30f23-e0cb-4eb8-a1df-88e3c5e6a83a/sist-en-726-6-1998

SIST EN 726-6:1998

EUROPEAN STANDARD **EN 726-6**

NORME EUROPÉENNE

EUROPÄISCHE NORM November 1995

ICS 33.120.00; 35.240.60

Descriptors: telecommunications, telecommunication terminals, IC cards, specifications, interfaces, services, numbering, data

English version

# Identification card systems - Telecommunications integrated circuit(s) cards and terminals - Part 6: Telecommunication features

Systèmes de cartes d'identification - Cartes à circuit intégré et terminaux pour les télécommunications - Partie 6: Services de télécommunications

Identifikationskartensysteme - Chipkarten und Endgeräte für Telekommunikationszwecke - Teil 6: Leistungsmerkmale

iTeh STANDARD PREVIEW
(standards.iteh.ai)
SIST EN 726-6:1998
https://standards.iteh.ai/catalog/standards/sist/3dd30f23-e0cb-4eb8-a1df-88e3c5e6a83a/sist-en-726-6-1998

This European Standard was approved by CEN on 1995-10-18. CEN members are bound to comply with the CEN/CENELEC Internal Regulations which stipulate the conditions for giving this European Standard the status of a national standard without any alteration.

Up-to-date lists and bibliographical references concerning such national standards may be obtained on application to the Central Secretariat or to any CEN member.

The European Standards exist in three official versions (English, French, German). A version in any other language made by translation under the responsibility of a CEN member into its own language and notified to the Central Secretariat has the same status as the official versions.

CEN members are the national standards bodies of Austria, Belgium, Denmark, Finland, France, Germany, Greece, Iceland, Ireland, Italy, Luxembourg, Netherlands, Norway, Portugal, Spain, Sweden, Switzerland and United Kingdom.

**CEN**

European Committee for Standardization
Comité Européen de Normalisation
Europäisches Komitee für Normung

**Central Secretariat: rue de Stassart,36 B-1050 Brussels**

© 1995 All rights of reproduction and communication in any form and by any means reserved in all countries to CEN and its members.

SIST EN 726-6:1998



## Contents

**Foreword** ..... **4**

**1 Scope** ..... **5**

**2 Normative references** ..... **5**

**3 Definitions and abbreviations** ..... **6**
3.1 Definitions ..... 6
3.2 Abbreviations ..... 7
3.3 Notations ..... 8

**4 General concept** ..... **8**
4.1 Selection of a telecommunication feature ..... 8
4.2 Concept of a telecommunication feature situated in the card architecture ..... 8
4.3 Conformity for keys and algorithms ..... 9

**5 Short Dialling** ..... **9**
5.1 General concept ..... 9
5.2 Security provisions ..... 10
5.3 Types of short dialling features ..... 10
5.3.1 Abbreviated Dialling ..... 10
5.3.2 Last Number Dialling ..... 10
5.4 Data requirements ..... 11
5.4.1 Specific files for short dialling ..... 11
5.4.2 Description of the application DFDIAL ..... 11
5.4.3 File for Abbreviated Dialling: EFDIAL ..... 12
5.4.4 File for capability/configuration parameters: EFCCP ..... 16
5.4.5 File for extension: EFEXT ..... 17
5.4.6 File for Last Number Dialling: EFLND ..... 19
5.4.7 EFCHV ..... 20
5.4.8 EFKEY_MAN and EFKEY_OP ..... 21
5.5 Operations specific for Abbreviated Dialling ..... 22
5.5.1 Select Abbreviated Dialling feature ..... 22
5.5.2 Select correspondent by alphanumeric ID ..... 22
5.5.3 Add a new correspondent by creating a new record ..... 22
5.5.4 Update an existing record ..... 23
5.6 Operations specific for Last Number Dialling ..... 23
5.6.1 Select Last Number Dialling feature ..... 23
5.6.2 Select correspondent by Last Number Dialling ..... 23
5.6.3 Store the last number dialled ..... 23

**6 Limiting telecommunication features** ..... **23**
6.1 General concept ..... 23

**7 Fixed Number Dialling** ..... **24**
7.1 General concept ..... 24
7.2 Data requirements ..... 25
7.2.1 Specific files for Fixed Number Dialling ..... 25
7.2.2 EFFIX ..... 26
7.2.3 File for capability/configuration parameters for Fixed Number Dialling: EFCCPF ..... 27
7.2.4 File for Extention of Fixed Number Dialling: $EF_{EXTF}$
7.3 Operations for Fixed Number Dialling ..... 30
7.3.1 Select correspondent by Fixed Number Dialling ..... 30
7.3.2 Fixed Number Dialling storage (Management operation) ..... 31

iTeh STANDARD PREVIEW
(standards.iteh.ai)
SIST EN 726-6:1998
https://standards.iteh.ai/catalog/standards/sist/3dd30123-e0cb-4eb8-a1df-88e3c3e6a83a/sist-en-726-6-1998

SIST EN 726-6:1998



**Annex A (Informative): Fixed Number Dialling with capability to switch off the limits ..... 32**
A.1 Card architecture
A.2 Structure of the card ..... 32
A.3 Operational modes ..... 33
A.3.1 Card with limits of Fixed Number Dialling switched off ..... 33
A.3.2 Card with Fixed Number Dialling application active (limited access to LIMITED application) ..... 33
A.4 Switching functionality ..... 33
A.4.1 Fixed Number Dialling active ..... 33
A.4.2 Fixed Number Dialling switched off ..... 33

**Annex B (Informative): Limiting telecommunication features ..... 34**
B.1 General concept ..... 34
B.2 Data requirements for a limiting telecommunication feature ..... 35
B.2.1 File structure ..... 35
B.2.2 DFING ..... 35
B.2.3 EFPASSWORD ..... 36
B.2.4 EFCHV ..... 39
B.2.5 EFKEY_MAN and EFKEY_OP ..... 39

iTeh STANDARD PREVIEW
(standards.iteh.ai)
SIST EN 726-6:1998
https://standards.iteh.ai/catalog/standards/sist/3dd30f23-e0cb-4eb8-a1df-88e3c5e6a83a/sist-en-726-6-1998

SIST EN 726-6:1998



**Foreword**

This European Standard has been prepared by the Technical Committee CEN/TC 224 "Machine-readable cards, related device interfaces and operations" of which the secretariat is held by AFNOR.

This European Standard shall be given the status of a national standard, either by publication of an identical text or by endorsement, at the latest by May 1996, and conflicting national standards shall be withdrawn at the latest by May 1996.

According to the CEN/CENELEC Internal Regulations, the following countries are bound to implement this European Standard: Austria, Belgium, Denmark, Finland, France, Germany, Greece, Iceland, Ireland, Italy, Luxembourg, Netherlands, Norway, Portugal, Spain, Sweden, Switzerland and the United Kingdom.

This European Standard consists of the following parts, under the general title "Identification card systems - Telecommunications integrated circuit(s) cards and terminals" :

- Part 1 : System overview ;
- Part 2 : Security framework ;
- Part 3 : Application independent card requirements ;
- Part 4 : Application independent card related terminal requirements ;
- Part 5 : Payment methods ;
- Part 6 : Telecommunication features ;
- Part 7 : Security module.

iTeh STANDARD PREVIEW
(standards.iteh.ai)
SIST EN 726-6:1998
https://standards.iteh.ai/catalog/standards/sist/3dd30f23-e0cb-4eb8-a1df-88e3c5e6a83a/sist-en-726-6-1998

SIST EN 726-6:1998



## 1 Scope

This part of EN 726 defines telecommunication features using IC cards. These telecommunication features may be used by more than one application.

This part of EN 726 describes the card-terminal interface. However, when needed the system is considered as well.

This part of EN 726 describes the following telecommunication features:

- **Abbreviated Dialling;**
- **Last Number Dialling (stored within the card);**
- **Fixed Number Dialling.**

## 2 Normative references

This European Standard incorporates by dated or undated reference, provisions from other publications. These normative references are cited at the appropriate places in the text and the publications listed hereafter. For dated references, subsequent amendments to, or revisions of any of these publications apply to this part of the European Standard only when incorporated in it by amendments or revision. For undated ferences the latest edition of the publication referred to applies.

iTeh STANDARD PREVIEW
(standards.iteh.ai)

| | | |
|---|---|---|
| EN 726-1 | | Identification card systems - Telecommunications integrated circuit(s) cards and terminals - Part 1: Systems overview |
| EN 726-2 | | Identification card systems - Telecommunications integrated circuit(s) cards and terminals - Part 2: Security framework |
| EN 726-3 | 1994 | Identification Card Systems - Telecommunications Integrated Circuit(s) Cards and Terminals - Part 3: Application independent card requirements |
| EN 726-4 | | Identification card systems - Telecommunications integrated circuit(s) cards and terminals - Part 4: Application independent card related terminal requirements |
| prEN 726-5 | | Identification card systems - Telecommunications integrated circuit(s) cards and terminals - Part 5: Payment methods |
| ISO/IEC 646 | 1991 | Information technology - ISO 7-bit coded character set for information interchange |
| ISO 1073-1 | 1976 | Alphanumeric character sets for optical recognition - Part 1: Character set OCR-A - Shapes and dimensions of the printed image |
| ISO 1073-2 | 1976 | Alphanumeric character sets for optical recognition - Part 2: Character set OCR-B - Shapes and dimensions of the printed image |
| ISO/IEC 7816-5 | | Identification cards - Integrated circuit(s) cards with contacts - Part 5: Numbering system and registration procedure for application identifiers. |

SIST EN 726-6:1998



| | | |
|---|---|---|
| ISO 10202-3 | | Financial transaction cards - Security architecture of financial transaction systems using integrated circuit cards - Part 3: Cryptographic key relationships |
| CCITT Recommendation E.164 | 1991 | Numbering plan for ISDN ERA. |
| CCITT Recommendation I.330 | 1988 | ISDN numbering and addressing priciples. |
| CCITT Recommendation T.50 | 1988 | International alphabet n$^{o}$ 5. |
| GSM 03.40 - Version 3.5.0 | | European digital cellular telecommunication system (Phase 2). Technical realization of the Short Message Service (SMS) Point-to-Point (PP).[1)] |

## 3 Definitions and abbreviations

### 3.1 Definitions

For the purposes of this standard, the following definitions apply:

**3.1.1 access conditions (AC):** A set of security attributes associated to a file.

**3.1.2 application:** An application consists of a set of security mechanisms, files, data, protocols (excluding transmission protocols), which are located and used in the IC card and outside of the IC card (external application).

iTeh STANDARD PREVIEW
(standards.iteh.ai)

**3.1.3 application provider (AP):** The entity which is responsible for the application after its allocation. One AP may have several applications in one card. The files allocated in the card corresponding to one application are called a card-application. There may exist several applications on a given card from the same application provider.

**3.1.4 card:** A multi-application card can be considered as a set of files, some of them shared by the different application providers and/or card issuer, other files owned exclusively by the different application providers or the card issuer. Files can e.g. be read, written or executed.

**3.1.5 card application:** The card related part of one application.

**3.1.6 card Issuer:** The card issuer is responsible for the common data of the card, the allocation of memory space for the applications and supplies the application providers with the necessary tools for loading the required application.

**3.1.7 dedicated file (DF):** A file containing AC and allocable memory. It may be the parent of elementary files and/or dedicated files.

**3.1.8 elementary file (EF):** An optional file containing AC, data or a program and no other files.

$EF_{CHV}$ is an elementary file containing the cardholder verification information (CHV).

$EF_{DIR}$ is an elementary file at the master file level, which contains a list of all, or part of, available applications in the card.

SIST EN 726-6:1998



$EF_{KEY\_MAN}$ is an elementary file containing management keys.

$EF_{KEY\_OP}$ is an elementary file containing operational keys.

**3.1.9 external application:** Entity, located in the external world, which communicates with the related card application during the session.

**3.1.10 external world:** All application related entities outside the card (in case of an off-line system: terminal, in case of an on-line system: terminal, network, host ...).

**3.1.11 file identifier (ID):** Each file (MF, DF, EF) has a file identifier consisting of 2 bytes.

**3.1.12 keyfile version:** Indicates the absolute version number of the keyfile (coded in BCD).

**3.1.13 master file (MF):** The mandatory unique file representing the root of the file structure and containing AC and allocable memory. It may be the parent of elementary files and/or dedicated files.

**3.1.14 operation:** A set of functions between the card application and the external world.

**3.1.15 path:** Concatenation of file identifiers without delimitation.

**3.1.16 record:** A string of bytes handled as a whole by the card and referenced by a record number or a record pointer.

iTeh STANDARD PREVIEW
(standards.iteh.ai)

**3.1.17 record number:** Is sequential and unique within an EF. It is managed by the card.

SIST EN 726-6:1998
https://standards.iteh.ai/catalog/standards/sist/3dd30f23-e0eb-4eb8-a1df-88e3c5e6a83a/sist-en-726-6-1998

**3.1.18 telecommunication feature:** An application likely to be used by various telecommunication services under conditions that may be specified in the corresponding elementary files.

## 3.2 Abbreviations

For the purposes of this standard, the following abbreviations apply:

| | |
|---|---|
| **AC** | Access Conditions |
| **AID** | Application Identifier |
| **CHV** | Card Holder Verification |
| **DF** | Dedicated File |
| **EF** | Elementary File |
| **ffs** | for further study |
| **IC** | Integrated Circuit |
| **ICC** | Integrated Circuit Card |
| **EW** | External World |
| **MF** | Master File |
| **PIN** | Personal Identification Number |

SIST EN 726-6:1998



### 3.3 Notations

'0' to '9' and 'A' to 'F': The sixteen hexadecimal digits.

## 4 General concept

### 4.1 Selection of a telecommunication feature

A way to detect which telecommunication features are supported by the IC card is for the external application to read out $EF_{DIR}$ at the master file level of the IC card. (refer to EN 726-3 and ISO/IEC 7816-5). This $EF_{DIR}$ may contain all the standardized application identifiers of the various applications supported by the IC card and the paths needed to select them.
If the application corresponding to a certain telecommunication feature is present in the IC card, but not listed in $EF_{DIR}$ (hidden applications), then it shall be up to the external world to know the path and the corresponding application identifier (AID).

The external application shall compare the list of available telecommunication features in the IC card with the list of telecommunication features it can support. It shall be left to the user to choose if he wants to use one or more telecommunication features in order to support the application he is actually using. It shall also be the user who has to select which one to use. For each telecommunication feature application, a unique standardized application identifier shall be defined.

iTeh STANDARD PREVIEW
(standards.iteh.ai)

### 4.2 Concept of a telecommunication feature situated in the card architecture

In figure 1 an example is given, of how a telecommunication feature application may be situated in a typical card architecture. It shall be taken into account however that more than one telecommunication feature can be supported by the card.

SIST EN 726-6:1998
https://standards.iteh.ai/catalog/standards/sist/3dd50f23-e0cb-4eb8-a1df-88e3c5e6a83a/sist-en-726-6-1998

SIST EN 726-6:1998



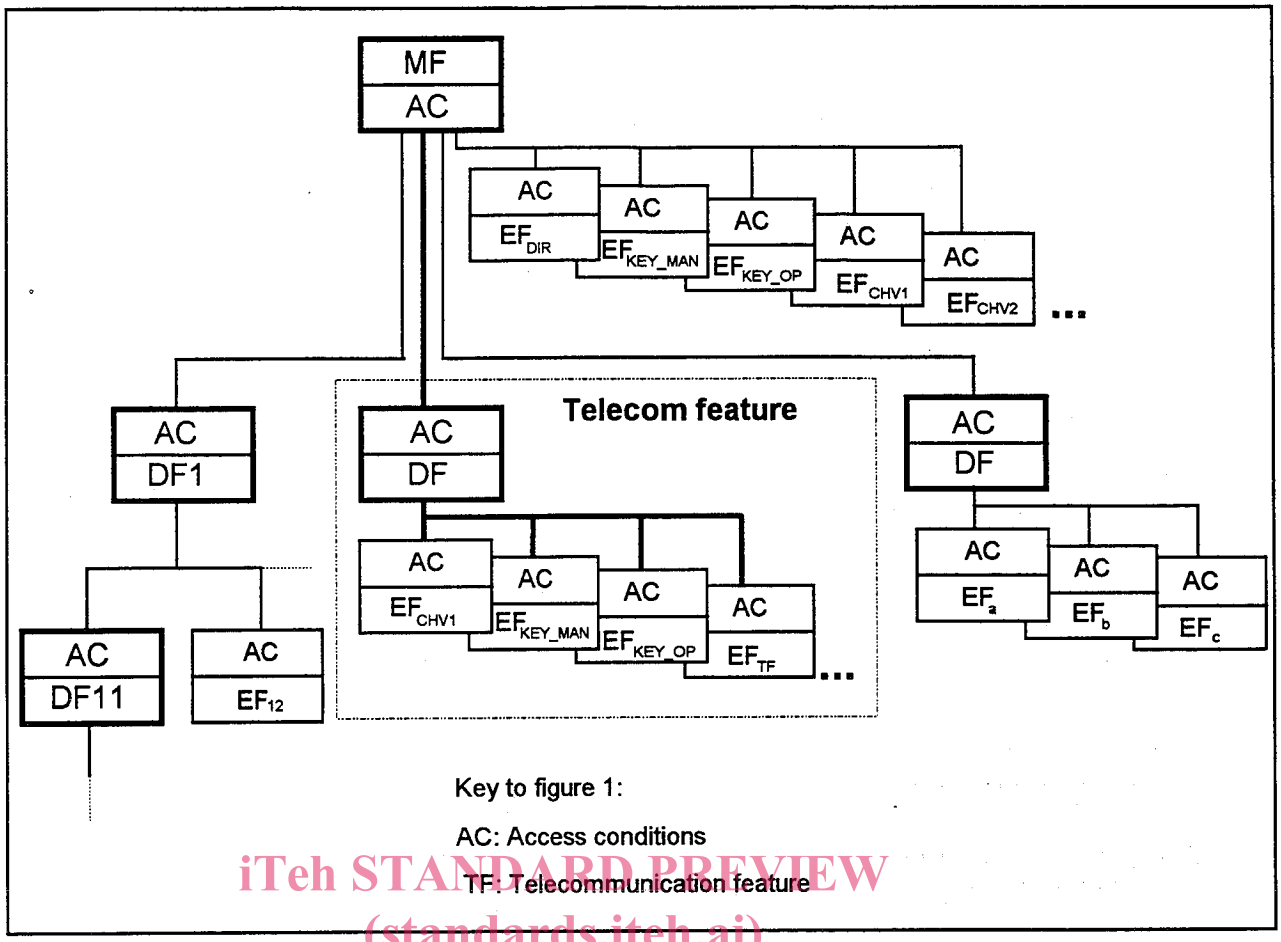


iTeh STANDARD PREVIEW
(standards.iteh.ai)

**Figure 1: Telecommunication feature situated in the card architecture**

SIST EN 726-6:1998
https://standards.iteh.ai/catalog/standards/sist/3dd30f23-e0cb-4eb8-a1df-88e3c5e6a83a/sist-en-726-6-1998

### 4.3 Conformity for keys and algorithms

If a telecommunication feature application requires an algorithm and a key, it is mandatory that the card application and the corresponding external application use the cohesive keys and algorithms.

The external world may select the cohesive keys and algorithm by using the AID of the telecommunication feature application and if necessary the keyfile version read out by selecting $EF_{KEY\_MAN}$ or $EF_{KEY\_OP}$.

## 5 Short Dialling

### 5.1 General concept

The dedicated file (DF) containing the short dialling features is created under the control of the card-issuer. The elementary files for each short dialling feature are created under the control of the provider of this telecommunications feature. It is then likely to be used by various telecommunication applications, while it will be the responsibility of the user to fill and to update the concerned EFs.

SIST EN 726-6:1998



## 5.2 Security provisions

From the security point of view, the short dialling application is independent from the application using the short dialling features, because they do not belong to the same DF in the IC card.
It shall be possible for the user to choose whether he wants to protect his short dialling files with a CHV or not.

## 5.3 Types of short dialling features

### 5.3.1 Abbreviated Dialling

This feature allows the user to store in the IC card the numbers of correspondents. These numbers are stored with an alphanumeric ID chosen by the user (optional).

When using this feature, the user can select a specific correspondent by dialling the corresponding alphanumeric ID (which could include selecting by name or by the first part of the name). The external world then has to evaluate and convert the number to be dialled out automatically. Converting means, adding the right prefixes depending on:

- country, area and network of the destination;
- country, area and network of the accessed terminal.

Optionally it allows to associate Network and Bearer Capabilities and/or extensions like Called Party Subaddress to recorded numbers.

iTeh STANDARD PREVIEW
(standards.iteh.ai)

### 5.3.2 Last Number Dialling

SIST EN 726-6:1998
https://standards.iteh.ai/catalog/standards/sist/3dd30f23-e0cb-4eb8-a1df-88c3c5c6a83a/sist-en-726-6-1998

This feature allows to store into the IC card, the last number dialled out on a terminal, and it allows to redial this number automatically (after selecting the feature), even from another terminal, in another country, area or network. The last number dialled out, may only be stored in the IC card with the approval of the user.

When the user selects this feature to dial out a number, as with Abbreviated Dialling, the external world then has to evaluate and convert the number to be dialled out.

Optionally it allows to associate Network and Bearer Capabilities and/or extensions like Called Party Subaddress to recorded numbers.

SIST EN 726-6:1998



## 5.4 Data requirements

### 5.4.1 Specific files for short dialling

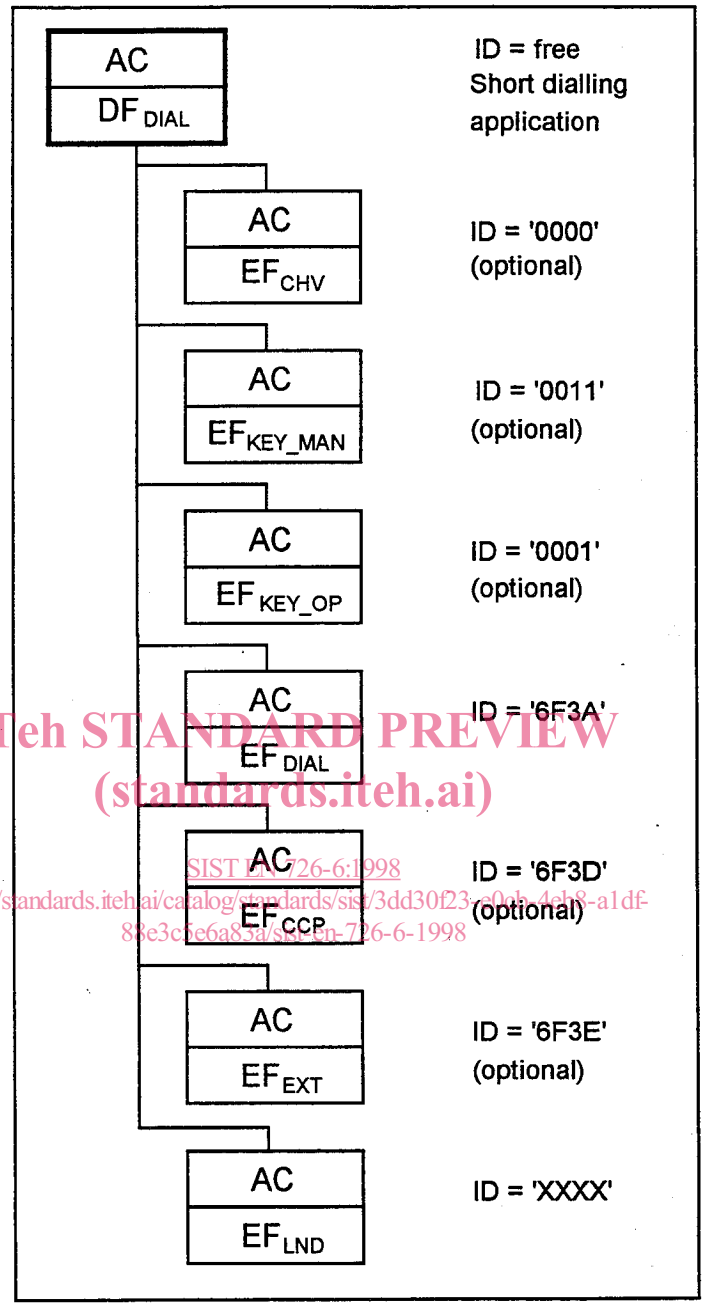


iTeh STANDARD PREVIEW
(standards.iteh.ai)
SIST EN 726-6:1998
https://standards.iteh.ai/catalog/standards/sist/3dd30f23-c0eb-4eb8-a1df-88e3c5e6a85a/sist-en-726-6-1998

**Figure 2: Tree structure for the short dialling application**

### 5.4.2 Description of the application $DF_{DIAL}$

**Purpose:**

This dedicated file represents the short dialling application and contains all the EFs representing the different short dialling features (Abbreviated Dialling and Last Number Dialling).

**File attributes and file structure:**