INTERNATIONAL STANDARD

ISO 4566

Second edition
1992-12-15

Small craft with inboard engine — Propeller shaft ends and bosses with 1:10 taper

Navires de plaisance à moteur intérieur — Extrémités d'arbres porte-hélices et moyeux d'hélices avec une conicité de 1:10

INTERNATIONAL ISO

Reference number
ISO 4566:1992(E)

Foreword

ISO (the International Organization for Standardization) is a worldwide federation of national standards bodies (ISO member bodies). The work of preparing International Standards is normally carried out through ISO technical committees. Each member body interested in a subject for which a technical committee has been established has the right to be represented on that committee. International organizations, governmental and non-governmental, in liaison with ISO, also take part in the work. ISO collaborates closely with the International Electrotechnical Commission (IEC) on all matters of electrotechnical standardization.

Draft International Standards adopted by the technical committees are circulated to the member bodies for voting. Publication as an International Standard requires approval by at least 75 % of the member bodies casting a vote.

International Standard ISO 4566 was prepared by Technical Committee ISO/TC 188, *Small craft*.

This second edition cancels and replaces the first edition (ISO 4566:1985). In table 1, the nominal diameter, D_{nom}, of 22 mm and its associated values are additional, and corrections have been made in the "key" column for nominal diameter, D_{nom}, of 25 mm. Minor editorial corrections have also been made.

International Organization for Standardization
Case Postale 56 • CH-1211 Genève 20 • Switzerland

Printed in Switzerland

Small craft with inboard engine — Propeller shaft ends and bosses with 1:10 taper

1 Scope

This International Standard specifies the dimensions for interchangeability of propeller bosses (hubs) and propeller shaft ends in the shaft diameter range of 20 mm to 160 mm with a taper of 1:10[1], intended for installation on inboard-engined small craft.

2 Normative references

The following standards contain provisions which, through reference in this text, constitute provisions of this International Standard. At the time of publication, the editions indicated were valid. All standards are subject to revision, and parties to agreements based on this International Standard are encouraged to investigate the possibility of applying the most recent editions of the standards indicated below. Members of IEC and ISO maintain registers of currently valid International Standards.

ISO/R 773:1969, *Rectangular or square parallel keys and their corresponding keyways (Dimensions in millimetres).*

ISO 1947:1973, *System of cone tolerances for conical workpieces from C = 1:3 to 1:500 and lengths from 6 to 630 mm.*

3 Definitions

For the purposes of this International Standard, the following definitions apply.

3.1 nominal diameter: Diameter of the large end of the shaft end taper, which is the same as the diameter of the cylindrical shaft, ignoring tolerances.

3.2 taper: Conical portion of the shaft end designed to accommodate a key to transmit the full propeller shaft torque to the propeller, while allowing for disassembly.

4 Dimensions

The dimensions shall be those shown in figure 1 and table 1. The "reference dimensions" indicated in the table shall be considered nominal dimensions for guidance only.

Configurations shown in figure 1 not specified by dimensions in table 1 are not essential to interchangeability and are therefore left to the discretion of the manufacturer.

Nominal diameters without brackets shall be preferred; those in brackets are a second choice.

Thread diameters without brackets shall similarly be preferred; those in brackets are alternatives.

5 Construction details

Details indicated in figure 1 are not intended to restrict design; nor are they to scale. Types and methods of construction or machining of the key, the keyway and their corner radii, the thread undercut and the thread end, or of other optional details (i.e. safety pin hole, centring point, etc.) are left open for individual methods to comply with the configuration of the coupling and/or particular needs.

The length of the thread l_2 shall be equal to thread diameter d_2. The part of the thread engaged by the propeller nut shall be not less than 80 % of the thread length l_2.

6 Tolerances

6.1 Shaft end taper small diameter, d_1

The tolerances shall be as given in table 1. The tolerance deviations are calculated from the nominal diameter.

1) ISO 8845 (to be published) will cover propeller shaft ends and bosses machined to a taper of 1:16.

6.2 Boss taper large diameter, D

The tolerances shall be as given in table 1.

6.3 Cone angle

The tolerances shall be cone diameter tolerances as in ISO 1947 with tolerance ranges equal to the diameter tolerance ranges specified in 6.1 and 6.2 for diameters d_1 and D respectively.

6.4 Keyways and keys

The tolerances shall be those given for normal keys in ISO/R 773.

6.5 Boss length, l_1

The tolerance shall be ± 0,5 mm.

7 Threads

Propeller nuts and shaft ends shall use M-Fine threads.

8 Designation

Both propeller shafts and bosses constructed in accordance with these requirements shall be designated by a reference to this International Standard, and the nominal diameter.

EXAMPLE

Propeller boss ISO 4566 - 35

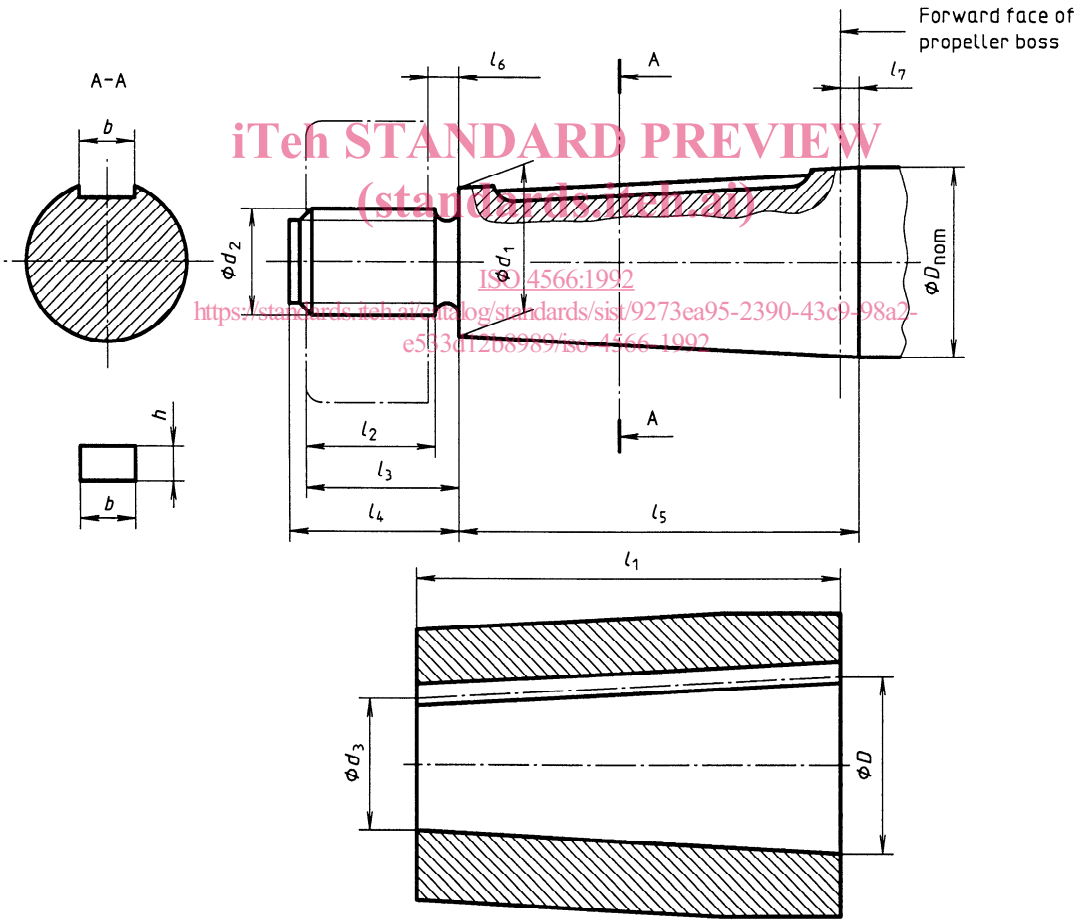

NOTE — l_2 (thread length) = $\varnothing d_2$
Part of thread engaged by nut = 0,8 l_2
See clause 5.

Figure 1

Table 1

Dimensions in millimetres

Nominal diameter	Boss			Shaft end taper		Thread				Key		Reference dimension[1]			
	Length	Bore bigger diameter		Small diameter		Diameter	Pitch	End		Width	Depth				
D_{nom}	l_1	D min.	D max.	d_1 max.	d_1 min.	d_2	P	l_3	l_4	b	h	l_5	l_6	l_7	d_3
20	50	20,000	20,052	15,500	15,448	14	1,5	20	25	6	6	45	5	0	15
22	50	22,000	22,052	17,500	17,448	16	1,5	20	25	6	6	45	5	0	17
25	60	25,000	25,052	19,500	19,448	16	1,5	20	25	8	7	55	5	0	19
30	80	30,000	30,052	22,500	22,448	20	1,5	25	30	8	7	75	5	0	22
35	90	35,000	35,062	26,500	26,448	24	2	30	35	10	8	85	5	0	26
40	100	40,000	40,062	30,500	30,448	24	2	30	35	12	8	95	5	0	30
45	110	45,000	45,062	34,500	34,438	30	2	35	40	14	9	105	5	0	34
50	120	50,000	50,062	38,500	38,438	36 (30)	3	40	45	14	9	115	5	0	38
(55)	130	55,000	55,074	43,000	42,926	36	3	40	45	16	10	120	10	0	42
60	140	60,000	60,074	47,000	46,926	42	3	50	55	18	11	130	10	0	46
(65)	150	65,000	65,074	51,000	50,926	42	3	50	55	18	11	140	10	0	50
70	160	70,000	70,074	55,000	54,926	48	3	55	60	20	12	150	10	0	54
(75)	170	74,500	74,574	58,500	58,426	48	3	55	60	20	12	165	10	5	57
80	180	79,500	79,574	62,500	62,426	56	4	65	70	22	14	175	10	5	61
(85)	190	84,500	84,587	66,500	66,413	56	4	65	70	22	14	185	10	5	65
90	200	89,500	89,587	71,000	70,913	64 (56)	4	70	75	25	14	190	15	5	69
(95)	210	94,500	94,587	75,000	74,913	64 (56)	4	70	75	25	14	200	15	5	73
100	220	99,000	99,087	78,500	78,413	72 (64)	4	80	85	28	16	215	15	10	77
110	240	109,000	109,087	86,500	86,413	80 (72)	4	85	90	28	16	235	15	10	85
120	260	119,000	119,087	94,500	94,413	90 (80)	4	90	95	32	18	255	15	10	93
130	280	129,0	129,1	102,500	102,413	100 (90)	4	100	105	32	18	275	15	10	101
140	300	139,0	139,1	110,500	110,413	100 (90)	4	100	105	36	20	295	15	10	109
150	320	149,0	149,1	118,500	118,413	110 (100)	4	110	115	36	20	315	15	10	117
160	340	159,0	159,1	126,500	126,413	120 (110)	4	120	125	40	22	335	15	10	125

1) For guidance only: see clause 4.

This page intentionally left blank

This page intentionally left blank

UDC 629.125.037-233.1

Descriptors: shipbuilding, small craft, marine propellers, propeller shafts, shaft ends, hubs, dimensions, dimensional tolerances, designation.

Price based on 3 pages