This international standard was developed in accordance with internationally recognized principles on standardization established in the Decision on Principles for the Development of International Standards, Guides and Recommendations issued by the World Trade Organization Technical Barriers to Trade (TBT) Committee.

Designation: D2068 – 20

Standard Test Method for Determining Filter Blocking Tendency[1]

This standard is issued under the fixed designation D2068; the number immediately following the designation indicates the year of original adoption or, in the case of revision, the year of last revision. A number in parentheses indicates the year of last reapproval. A superscript epsilon (ε) indicates an editorial change since the last revision or reapproval.

INTRODUCTION

This test method describes three procedures using different filter media. The result of any test is dependent on the filter mandated in the procedure. If a specification requires a specific D2068 procedure, do not substitute a different procedure or filter without agreement from the specifier.

1. Scope*

1.1 This test method covers three procedures for the determination of the filter blocking tendency (FBT) and filterability of middle distillate fuel oils and liquid fuels such as biodiesel and biodiesel blends. The three procedures and associated filter types are applicable to fuels within the viscosity range of 1.3 mm^2 to 6.0 mm^2/s at 40 °C.

NOTE 1—ASTM specification fuels falling within the scope of this test method are: Specification D396 Grades No 1 and 2; Specification D975 Grades 1-D, low sulfur 1-D and 2-D; Specification D2880 Grades 1-GT and 2-GT; Specification D6751.

1.2 This test method is not applicable to fuels that contain free (undissolved) water (see 7.3).

1.3 The values stated in SI units are to be regarded as standard. No other units of measurement are included in this standard.

1.4 *This standard does not purport to address all of the safety concerns, if any, associated with its use. It is the responsibility of the user of this standard to establish appropriate safety, health, and environmental practices and determine the applicability of regulatory limitations prior to use.*

1.5 *This international standard was developed in accordance with internationally recognized principles on standardization established in the Decision on Principles for the Development of International Standards, Guides and Recommendations issued by the World Trade Organization Technical Barriers to Trade (TBT) Committee.*

2. Referenced Documents

2.1 *ASTM Standards:*[2]

D396 Specification for Fuel Oils

D975 Specification for Diesel Fuel

D2880 Specification for Gas Turbine Fuel Oils

D4057 Practice for Manual Sampling of Petroleum and Petroleum Products

D4176 Test Method for Free Water and Particulate Contamination in Distillate Fuels (Visual Inspection Procedures)

D4177 Practice for Automatic Sampling of Petroleum and Petroleum Products

D4860 Test Method for Free Water and Particulate Contamination in Middle Distillate Fuels (Clear and Bright Numerical Rating)

D6300 Practice for Determination of Precision and Bias Data for Use in Test Methods for Petroleum Products, Liquid Fuels, and Lubricants

D6426 Test Method for Determining Filterability of Middle Distillate Fuel Oils

D6708 Practice for Statistical Assessment and Improvement of Expected Agreement Between Two Test Methods that Purport to Measure the Same Property of a Material

D6751 Specification for Biodiesel Fuel Blend Stock (B100) for Middle Distillate Fuels

2.2 *ISO Standard:*[3]

ISO 5636-5 Paper and Board—Determination of Air Permeance and Air Resistance (Medium Range) Part 5 Gurley Method

[1] This test method is under the jurisdiction of ASTM Committee D02 on Petroleum Products, Liquid Fuels, and Lubricants and is the direct responsibility of Subcommittee D02.14 on Stability, Cleanliness and Compatibility of Liquid Fuels.

Current edition approved Oct. 1, 2020. Published October 2020. Originally approved in 1997. Last previous edition approved in 2017 as D2068 – 17. DOI: 10.1520/D2068-20.

[2] For referenced ASTM standards, visit the ASTM website, www.astm.org, or contact ASTM Customer Service at service@astm.org. For *Annual Book of ASTM Standards* volume information, refer to the standard's Document Summary page on the ASTM website.

[3] Available from American National Standards Institute (ANSI), 25 W. 43rd St., 4th Floor, New York, NY 10036, http://www.ansi.org.

***A Summary of Changes section appears at the end of this standard**

Copyright © ASTM International, 100 Barr Harbor Drive, PO Box C700, West Conshohocken, PA 19428-2959. United States

2.3 *ASTM Adjuncts:*

D2PP, Determination of Precision and Bias Data for Use in Test Methods for Petroleum Products[4]

CompTM, Standard Practice for Statistical Assessment and Improvement of the Expected Agreement between Two Test Methods that Purport to Measure the Same Property of a Material[4]

3. Terminology

3.1 *Definitions of Terms Specific to This Standard:*

3.1.1 *filterability, n—of certain fuels*, the relationship between the volume of sample filtered and the measured pressure increase across the filter.

3.1.1.1 *Discussion*—The filterability of the fuel can be assessed by recording the pressure when a specific volume of fuel has flowed through the filter, or recording the volume when a specific pressure across the filter has been achieved. This assessment may be assisted by plotting a volume versus pressure graph. See Appendix X1.

3.1.2 *filter blocking tendency (FBT), n—of certain fuels*, a calculated dimensionless value that defines the tendency of particulates in a fuel to plug or block a filter.

3.1.2.1 *Discussion*—The value is calculated using the pressure across the filter or the volume of fuel filtered at the end of the test. Depending on the outcome of the test, one of two equations is applied. See Section 10, Calculation. See 5.6 for interpretation of results.

4. Summary of Test Method

4.1 A test portion of the fuel to be analysed is passed at a constant rate of flow (20 mL/min) through a specified filter medium. The pressure difference across the filter, and the volume of fuel passing the filter, are monitored until the pressure reaches 105 kPa or the volume of fuel passing the filter medium reaches 300 mL. The pressure (see 3.1.2.1) and flow are then used to calculate the filter blocking tendency, where a low number indicates a good fuel (see 5.6).

4.2 The glass fiber filters specified for Procedures A and B are both 1.6 µm nominal pore diameter; Filter B is a pre-assembled encapsulated type.

4.3 The pre-assembled nylon filter specified for Procedure C has a 5 µm nominal pore diameter.

5. Significance and Use

5.1 This test method is intended for use in evaluating the cleanliness of middle distillate fuels, and biodiesel and biodiesel blends for specifications and quality control purposes.

5.2 The filter media specified in the three procedures are all suitable for the materials in the Scope. Specifications calling up this test method should state the procedure required.

5.3 A change in filtration performance after storage or pretreatment can be indicative of changes of fuel condition.

5.4 The filterability of fuels varies depending on filter porosity and structure and therefore results from this test method might not correlate with full-scale filtration.

5.5 Causes of poor filterability in industrial/refinery filters include fuel degradation products, contaminants (including water) picked up during storage or transfer, effects due to temperature or composition for bio fuels, incompatibility of commingled fuels, or interaction of the fuel with the filter media. Any of these could correlate with orifice or filter system plugging, or both.

5.6 The results of the FBT test can range from 1 with a fuel with very good filterability, to over 100 for a fuel with poor filterability. The selection of a single FBT number to define a pass or fail criteria is not possible as this will be dependent on the fuel type and applications.

6. Apparatus

6.1 *General*—The apparatus, as described in Annex A1 and shown in Fig. A1.1, is available as a manufactured unit or can be constructed from individual components.

6.2 *Filter Media and Assemblies:*

NOTE 2—Effective filtration areas were determined by measuring the diameter of the sediment in the centre of the filter media.

6.2.1 *Filter A,* for Procedure A.

6.2.1.1 *Filter Housing,*[5] stainless steel, nominal 13 mm diameter with a Luer fitting at the top where it connects with the filtration apparatus. Fig. 1 shows the assembly.

6.2.1.2 *Filter Media,*[6] glass fiber, 1.6 µm nominal pore diameter, nominal 13 mm diameter and with an effective filtration area of 63.6 mm^2 to 78.6 mm^2. Filter media shall be batch selected to have a Gurley time (ISO 5636-5) of between 12.5 s and 13.4 s for 300 mL.

6.2.2 *Filter B,*[7] for Procedure B.

6.2.2.1 *Filter Housing,* disposable polypropylene "syringe type" with Luer and taper fittings, and factory-fitted filter media. The filter, as shown in Fig. 2, is used with an adaptor (6.9) to allow the test portion to input through the taper fitting and exit from the Luer fitting. The filter medium is supported by a coarse glass-fiber support pad as shown in Fig. 2. Filters fitted with additional pre-filtration are not permitted and can affect FBT results.

6.2.2.2 *Filter Media,* glass fiber grade GF/A, 1.6 µm nominal pore diameter and effective filtration area of 95.0 mm^2 to 113.1 mm^2. The filters shall be batch selected (one or more filters from a batch are tested) and quality controlled (using a procedure and a fluid with a known pressure/flow characteristic, for example, ISO 5636-5) for equivalence with the assembled Filter A.

6.2.3 *Filter C,*[7] for Procedure C.

[4] This adjunct has been withdrawn and is no longer available.

[5] The sole source of supply of the Filter A housing, known to the committee at this time is Millipore Cat No XX3001200, available from Millipore Corporation Headquarters, 290 Concord Road, Billerica, MA 01821. If you are aware of alternative suppliers, please supply this information to ASTM International Headquarters. Your comments will receive careful consideration by a meeting of the responsible technical committee,[1] which you may attend.

[6] Whatman Grade GF/A, has been found satisfactory for this purpose.

[7] The following equipment, as listed in RRSR: IP 387/07 (see Footnote 10), was used to develop the precision statements; Seta MFT Multi Filtration Tester part number 91600, Filter capsule "B" part number 91616-001 and Filter capsule "C" part number 91620. Stanhope-Seta, Chertsey, Surrey, KT16 8AP, UK. This is not an endorsement or certification by ASTM.

iTeh Standards (https://standards.iteh.ai) Document Preview

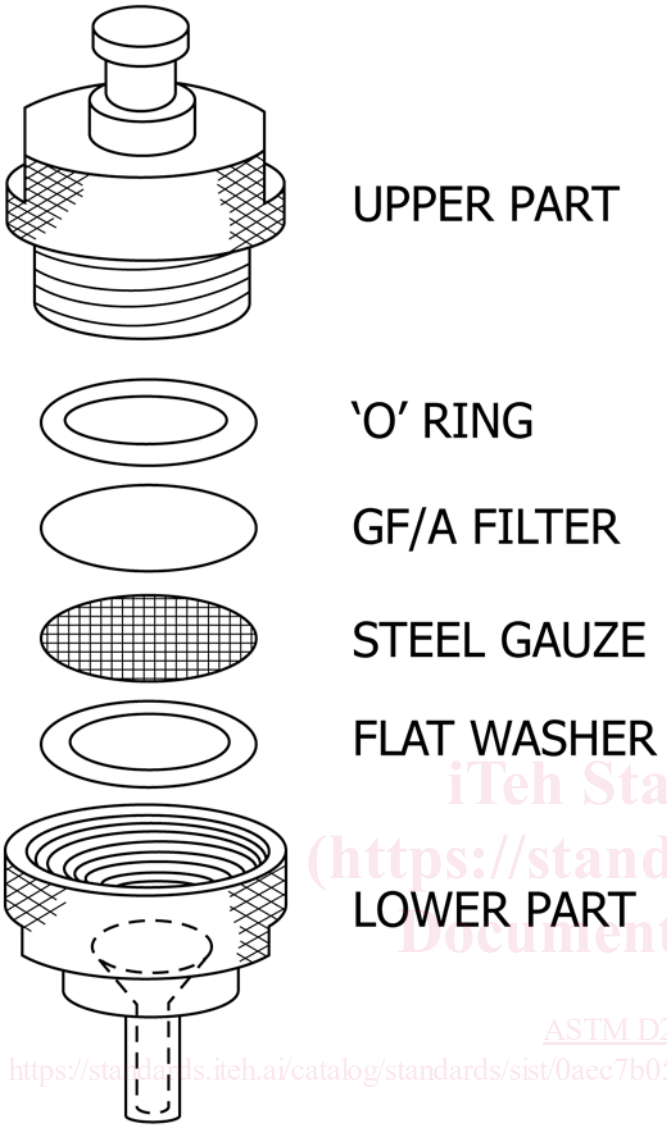

FIG. 1 Assembly of Filter A

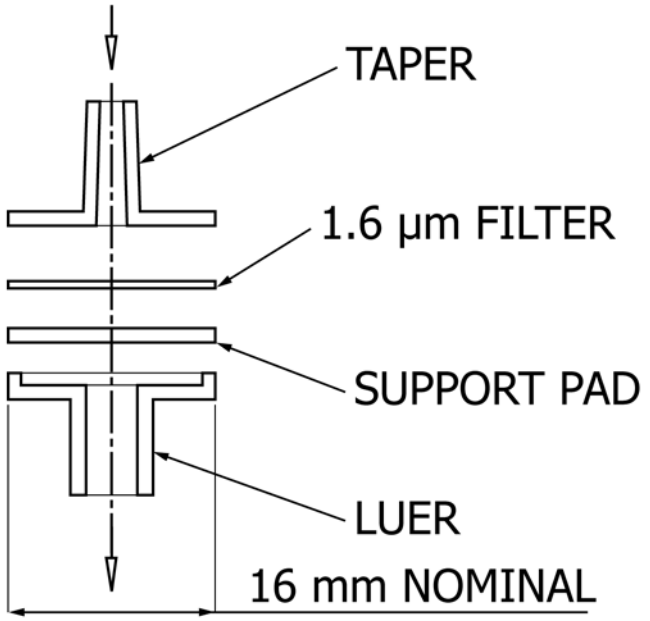

FIG. 2 Filter B

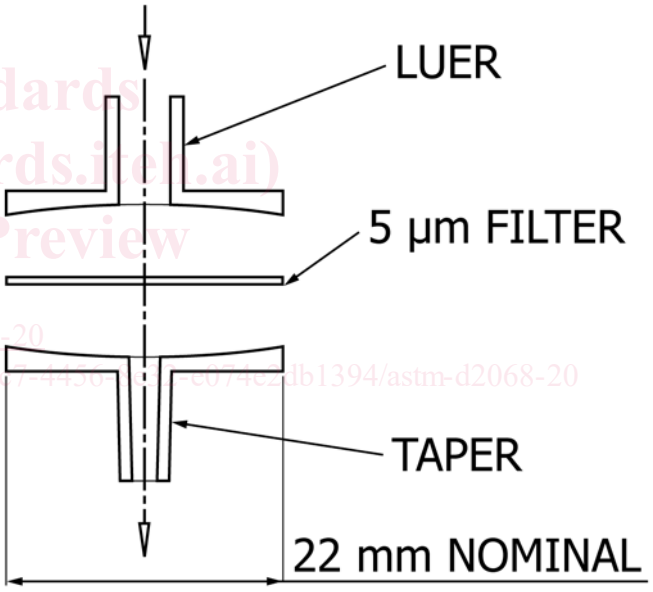

FIG. 3 Filter C

iTeh Standards
(https://standards.iteh.ai)
Document Preview
ASTM D2068-20
https://standards.iteh.ai/catalog/standards/sist/0aec7b05-96e7-4456-9e3f-e074e2db1394/astm-d2068-20

6.2.3.1 *Filter Housing,* disposable polypropylene "syringe type" filter housing, as shown in Fig. 3, which has Luer and taper fittings, and factory-fitted filter media. The test portion inputs via the Luer fitting. The filter medium is held above concentric/segmented ribbed channels and the exit port is recessed and segmented to eliminate localized filter blocking.

6.2.3.2 *Filter Media,* nylon, 5 µm nominal pore diameter and effective filtration area of 143.2 mm^2 to 165.2 mm^2. The filters shall be batch selected (one or more filters from a batch are tested) and quality controlled (using a procedure and a fluid with a known pressure/flow characteristic, for example, ISO 5636-5).

6.3 *Measuring Cylinder,* 25 mL, glass or other suitable transparent material, with graduations every 0.5 mL, for verifying the flow rate.

6.4 *Measuring Cylinder,* 500 mL, glass or other suitable transparent material, with graduations every 5 mL, for verifying the flow rate, and for measuring the volume of fuel in the fuel receiver if required.

6.5 *Stopwatch,* capable of measuring to the nearest 0.2 s, required for verifying the flow rate and preparing the sample.

6.6 *Thermometer,* electronic or liquid-in-glass type thermometers with a range of at least 15 °C to 25 °C and an accuracy of ±0.5 °C or better are suitable.

6.7 *Forceps,* spade-ended, for use with Filter A.

6.8 *Open-Ended Spanner Wrenches,* plastic or metal, for use with Filter A.

6.9 *Adaptor,* only for use with Procedure B, to convert the Luer fitting on the apparatus to a fitting compatible with the tapered fitting on Filter B.

6.10 *Anti-Splash Tubing,* nylon or silicone rubber, approximately 4 mm inner diameter for Filters A and C, and 6 mm inner diameter for Filter B, to reduce splashing of the sample in the fuel receiver beaker.

7. Sampling

7.1 Unless otherwise specified, samples shall be obtained in accordance with Practices D4057, D4177, or other comparable sampling practices.

7.1.1 Containers shall have been previously flushed three times with the product to be sampled.

7.2 Obtain at least 400 mL of a representative aliquot of the sample to be tested in an epoxy-lined can or dark glass bottle.

7.3 If any undissolved water is visually apparent (as determined by Test Method D4176 or D4860), discard and replace with a fresh sample.

8. Preparation of Apparatus

8.1 *Verification:*

8.1.1 *Pressure and Temperature*—Follow the manufacturer's instructions for verifying that the pressure and temperature readings are in accordance with the tolerances given in A1.1.3 and 6.6, respectively. Verify the pressure reading, at ambient atmospheric pressure (0 kPa) and at approximately 100 kPa, at least every six months or if the apparatus has not been used for the previous three months. Verify the temperature reading is correct, at ambient temperature, at least every twelve months. If the readings do not meet the specified tolerances in A1.1.3 and 6.6, calibrate the sensors (8.2.1).

8.1.2 *Flow Rate*—Follow the manufacturer's instructions for verifying that the flow rate is 20 mL ± 1 mL/min through a filter assembly. The flow rate is verified by measuring the volume pumped during a 15 min period, at least once a month, using a suitable measuring cylinder (6.4). If the measured volume is between 285 mL and 315 mL the flow rate is correct. More frequent checks on the flow rate may be made by measuring the volume during a 1 min period using a 25 mL measuring cylinder (6.3). If the measured volume is not between 19 mL and 21 mL, calibrate the pump (8.2.2).

8.2 *Calibration:*

8.2.1 *Pressure and Temperature*—Follow the manufacturer's instructions to calibrate the pressure at atmospheric pressure (0 kPa) and approximately 100 kPa, and temperature-measuring device at ambient temperature.

8.2.2 *Flow Rate*—Follow the manufacturer's instructions to set and lock the mechanical flow adjustment control on the pump to give a flow rate of 20 mL ± 1 mL/min.

8.2.2.1 A filter assembly shall be fitted when the flow rate is calibrated.

8.3 *Apparatus Assembly*—Assemble the apparatus as shown in Fig. A1.1, without the filter unit connected.

8.4 *Filter Assembly*—Assemble the filter appropriate to the test procedure specified.

8.4.1 *Filter A (for Procedure A)*—Assemble the filter as shown in Fig. 1 using a new filter medium handled with the forceps (6.7), taking care not to damage the filter medium. Place the medium into the holder with the face marked with a grid pattern uppermost. The open-ended spanner wrenches (6.8) may be used to assist in assembling or disassembling the housing. Attach a suitable length (typically 80 mm to 90 mm) of anti-splash tubing (6.10) to the outlet of the filter assembly.

NOTE 3—It is most important that the filter unit components are assembled in the exact configuration shown in Fig. 1.

NOTE 4—Over- or under-tightening of the Filter A assembly can lead to erroneous results.

8.4.2 *Filter B (for Procedure B)*—Attach a suitable length (typically 80 mm to 90 mm) of anti-splash tubing (6.10) to the outlet of the filter assembly.

8.4.2.1 Attach the adaptor (6.9) to the Luer fitting on the outlet of the apparatus.

8.4.3 *Filter C (for Procedure C)*—Attach a suitable length (typically 80 mm to 90 mm) of anti-splash tubing (6.10) to the outlet of the filter assembly.

8.5 Rinse the fuel reservoir beaker with some of the product to be tested, and discard.

8.6 Remove the adaptor if Procedure A or C is to be used.

9. Procedures A, B, and C

9.1 *General*—Unless otherwise specified or required in 9.1.7, the test specimen shall be prepared as described in 9.1.1 – 9.1.6.

9.1.1 Measure the temperature (6.6) of the fuel in the container, and adjust to 15 °C to 25 °C if necessary.

9.1.2 Shake the fuel container vigorously for 120 s ± 5 s, and then allow to stand on a vibration-free surface for 300 s ± 15 s.

9.1.3 Place at least 350 mL of the sample into the fuel reservoir beaker and check that the temperature (6.6) is still within the range of 15 °C to 25 °C. Record the actual temperature. If any undissolved water is apparent in the fuel at this stage, abandon the test and report the presence of water.

9.1.4 Place the pump suction pipe into the reservoir beaker and run the pump. Flush the system through with the sample by allowing approximately 20 mL of the sample to flow into the receiver beaker. Stop the pump and discard any fuel from the fuel receiver beaker.

9.1.5 Test fuels having an extremely high blocking tendency can cause the pressure reading to rise so rapidly at the beginning of the test that the initial pressure requirement cannot be met. If this is found to be the case after checking the pump and filter units, the requirement may be ignored, and this fact reported in the form described in 11.2.

9.1.6 Use the stopwatch and a 500 mL measuring cylinder if the apparatus is not automated.

9.1.7 Samples subjected to specific pretreatment, that may be specified in other test methods or procedures, shall follow the prescribed instructions, particularly the temperature requirements, sample mixing, and flushing of the system. The precision of this test method may not apply in such circumstances.

9.2 *Procedure A:*

9.2.1 Attach the assembled Filter A assembly to the Luer fitting on the system.

iTeh Standards (https://standards.iteh.ai) Document Preview
ASTM D2068-20
https://standards.iteh.ai/catalog/standards/sist/1b5-96c1-45d8-8c5e-e1de1ad1995-astm-d2068-20

9.2.2 Re-start the pump and after 20 s, record the pressure gauge reading, which should be within the range 7 kPa to 40 kPa. If the pressure gauge reading is not within the correct range, stop the pump and check the apparatus for faults.

NOTE 5—A pressure reading of greater than 21 kPa can indicate an incorrect installation of the filter media.

9.2.3 Observe the pressure gauge reading as pumping continues. If the pressure rises to 105 kPa, stop the pump immediately. Measure and record the volume of the fuel in the receiver beaker, rounding off the figure to the nearest 10 mL.

9.2.4 When 300 mL of sample has been pumped without the pressure rising to 105 kPa, record the pressure reading at the end of the test (see 3.1.2.1) to the nearest 5 kPa, and discontinue the test.

9.2.5 Disassemble the filter unit and inspect the filter medium. The patch of sediment (if visible) in the centre shall be 9 mm to 10 mm in diameter. Repeat the test if this condition is not met.

9.3 *Procedure B:*

9.3.1 Follow the manufacturer's instructions to attach the adaptor (6.9) to the Luer fitting on the system.

9.3.2 Attach the tapered end of Filter B to the adaptor.

NOTE 6—Procedure B uses a syringe filter in an "upside down" orientation.

9.3.3 Re-start the pump and after 20 s, record the pressure gauge reading, which should be within the range 7 kPa to 40 kPa. If the pressure gauge reading is not within the correct range, stop the pump and check the apparatus for faults.

9.3.4 Observe the pressure gauge reading as pumping continues. If the pressure rises to 105 kPa, stop the pump immediately. Measure and record the volume of the fuel in the receiver beaker, rounding off the figure to the nearest 10 mL.

9.3.5 When 300 mL of sample has been pumped without the pressure rising to 105 kPa, record the pressure reading at the end of the test (see 3.1.2.1), and discontinue the test.

9.4 *Procedure C:*

9.4.1 Attach Filter C to the Luer fitting on the system.

9.4.2 Re-start the pump and after 20 s, record the pressure gauge reading, which should be within the range 7 kPa to 40 kPa. If the pressure gauge reading is not within the correct range, stop the pump and check the apparatus for faults.

9.4.3 Observe the pressure gauge reading as pumping continues. If the pressure rises to 105 kPa, stop the pump immediately. Measure and record the volume of the fuel in the receiver beaker, rounding off the figure to the nearest 10 mL.

9.4.4 When 300 mL of sample has been pumped without the pressure rising to 105 kPa, record the pressure reading at the end of the test (see 3.1.2.1), and discontinue the test.

9.5 *All Procedures:*

9.5.1 If for specification compliance purposes, the test is stopped manually after a specific volume of fuel other than 300 mL has been pumped through the filter, record and report the pressure and volume. Do not use Eq 1 and 2.

9.5.2 If during any test the pressure rises to 105 kPa or if a sample is known to be severely contaminated with particulates, then follow the manufacturer's instructions to clean the pulse damper assembly before commencing the next test. An example of a suitable procedure is described in Appendix X3.

9.5.3 Some test materials are known to occasionally show a decline in pressure during the test. This can be a function of the material/filter media, but could be indicative of a test apparatus leak. If an unexpected pressure drop is noticed, check that the Luer-lock filter connections are not leaking and follow the manufacturer's instructions for performing leak tests.

10. Calculation

10.1 Calculate the filter blocking tendency (FBT) using one of the equations below. Eq 1 applies when 300 mL of fuel has passed the filter medium at a pressure below 105 kPa, and Eq 2 applies when the test has been discontinued when the pressure reached 105 kPa.

$$FBT = \sqrt{1 + \left(\frac{P}{105}\right)^2} \quad (1)$$

$$FBT = \sqrt{1 + \left(\frac{300}{v}\right)^2} \quad (2)$$

where:

P = pressure reading at the end of the test obtained for 300 mL of fuel to pass the filter, in kilopascals, and

v = volume of fuel in millilitres, passed prior to the pressure rising to 105 kPa.

11. Report

11.1 If free (undissolved) water is observed (see 9.1.3), report as "Free (undissolved) water present, test not carried out."

11.2 If the test is stopped manually when a specified volume of fuel has been pumped report: volume pumped and final pressure.

11.3 For all completed tests, report the following:

11.3.1 A reference to this standard;

11.3.2 The procedure used (A, B, or C);

11.3.3 The type and complete identification of the product tested;

11.3.4 The result of the test (FBT) to the nearest 0.01;

11.3.5 The volume of fuel pumped, in mL, rounded to the nearest 10 mL;

11.3.6 The pressure at the end of the test, in kPa, rounded to the nearest 5 kPa;

11.3.7 The sample temperature (see 9.1.1), in ºC;

11.3.8 Any deviation, by agreement or otherwise, from the procedure specified; and

11.3.9 The date of the test.

11.4 If the condition of 9.1.5 applies, report "high initial pressure" appended to the FBT result.

12. Precision and Bias[8]

12.1 The precision for FBT was derived from a cooperative test program held at a single location, on July 10–12, 2006,

[8] Supporting data have been filed at ASTM International Headquarters and may be obtained by requesting Research Report RR:D02-1644. This data is also available from the Energy Institute, UK www.energyinst.org.uk and may be obtained by requesting the Round Robin Study Report: RRSR: IP 387/07.

iTeh Standards (https://standards.iteh.ai) Document Preview
ASTM D2068-20

using six instruments and operators, and eleven blind randomized samples in duplicate. The samples comprised F76 marine diesel, automotive diesel, biodiesel, automotive diesel plus biodiesel, and gas oil. The precision was obtained by statistical examination of laboratory test results according to ISO 42595 (D6300) using D2PP,[4] and is given in 12.1 and 12.2. Table 1 shows the precision in tabular form. As the precision was determined from results obtained at a single location the reproducibility may not be comparable when results obtained at different times and locations are compared, due to sampling, shipping, storage, and environmental factors. In practice, two results obtained from different locations would be acceptable if their difference did not exceed the published reproducibility. In the event of a dispute or concern regarding the FBT of a sample, it is recommended that freshly obtained samples are tested by both parties at the bulk storage location. This ensures that nominally identical samples are tested by either or both parties and the precision shown in 12.1.1 and 12.1.2 shall apply.

NOTE 7—The viscosity range of the samples used to determine the precision was 2.0 mm^2 to 4.6 mm^2/s.

12.1.1 *Repeatability*—The difference between successive test results obtained by the same operator with the same apparatus under constant operating conditions on identical test material would, in the normal and correct operation of the test method, exceed the value below only in one case in 20:

Procedure	Repeatability
A	$0.1009\ x^{1.6}$
B	$0.0698\ x^{2}$
C	$0.0842\ x^{1.8}$

where x is the average of results being compared

12.1.2 *Reproducibility*—The difference between two test results independently obtained by different operators operating in different laboratories on nominally identical test material would, in the normal and correct operation of the test method, exceed the value below only in one case in 20:

Procedure	Reproducibility
A	$0.2318\ x^{1.6}$
B	$0.0616\ x^{2}$
C	$0.1337\ x^{1.8}$

where x is the average of results being compared

NOTE 8—The degree of freedom associated with the reproducibility estimate for Procedure A from this round-robin study is 20. Since the minimum requirement of 30 (per Practice D6300) is not met, users are cautioned that the actual reproducibility for Procedure A could be significantly different from this estimate.

12.2 *Degree of Agreement Between Results by Procedure A and Procedure B*—Results, on the same materials, produced by Procedures A and B have been assessed in accordance with procedures outlined in Practice D6708. The findings are:

12.2.1 The degree of agreement between Procedures A and B can be further improved by applying the following bias correction outlined in Eq 3 and 4. Sample-specific bias, as defined in Practice D6708, was observed for some samples after applying the bias correction.

$$\text{Predicted Procedure B FBT from Procedure A result} = (0.9133)(A) \quad (3)$$

$$\text{Predicted Procedure A FBT from Procedure B result} = (1.097)(B) \quad (4)$$

12.2.2 Differences between bias-corrected results from Procedure A (that is, Predicted Procedure B result) and an actual

iTeh Standards (https://standards.iteh.ai) Document Preview
ASTM D2068-20
https://standards.iteh.ai/catalog/standards/sist/...-e074e2db1394/astm-d2068-20

TABLE 1 Tabulated Precision

	Procedure A		for "A"	for "B"	Procedure B		Procedure C	
FBT	r	R	Rxy	Rxy	r	R	r	R
1.10	0.12	0.27	0.26	0.23	0.08	0.07	0.10	0.16
1.20	0.14	0.31	0.30	0.27	0.10	0.09	0.12	0.19
1.40	0.17	0.40	0.38	0.35	0.14	0.12	0.15	0.24
1.60	0.21	0.49	0.47	0.43	0.18	0.16	0.20	0.31
1.80	0.26	0.59	0.57	0.52	0.23	0.20	0.24	0.39
2.00	0.31	0.70	0.68	0.62	0.28	0.25	0.29	0.47
2.50	0.44	1.00	0.99	0.90	0.44	0.39	0.44	0.70
3.00	0.59	1.34	1.34	1.22	0.63	0.55	0.61	0.97
3.50	0.75	1.72	1.73	1.58	0.86	0.75	0.80	1.27
4.00	0.93	2.13	2.17	1.98	1.12	0.99	1.02	1.62
4.50	1.12	2.57	2.65	2.42	1.41	1.25	1.26	2.00
5.00	1.33	3.04	3.16	2.89	1.75	1.54	1.53	2.42
5.50	1.54	3.55	3.72	3.39	2.11	1.86	1.81	2.88
6.00	1.77	4.08	4.31	3.94	2.51	2.22	2.12	3.36
6.50	2.02	4.63	4.94	4.51	2.95	2.60	2.45	3.88
7.00	2.27	5.22	5.61	5.12	3.42	3.02	2.80	4.44
7.50	2.54	5.82	6.32	5.77	3.93	3.47	3.17	5.03
8.00	2.81	6.46	7.06	6.44	4.47	3.94	3.56	5.65
8.50					5.04	4.45	3.97	6.30
9.00					5.65	4.99	4.39	6.98
9.50					6.30	5.56	4.84	7.69
10.00					6.98	6.16	5.31	8.44
11.00					8.45	7.45		
12.00					10.05	8.87		
13.00					11.80	10.41		
14.00					13.68	12.07		
15.00					15.71	13.86		

Procedure B result, for the sample types and property ranges studied, are expected to exceed the following between-method (procedure) reproducibility (R_{xy}), as defined in Practice D6708, about 5 % of the time:

12.2.2.1 For R_{xy} where results are analysed in terms of Procedure B (see Table 1, for "B," for tabular form in terms of Procedure B):

$$R_{xy} = \sqrt{(0.03697(\text{Predicted } B = \text{bias\_corrected } A)^{3.2} + 0.003131(B)^4)} \quad (5)$$

12.2.2.2 For R_{xy} where results are analysed in terms of Procedure A (see Table 1, for "A," for tabular form in terms of Procedure A):

$$R_{xy} = \sqrt{(0.003769(\text{Predicted } A = \text{bias\_corrected } B)^4 + 0.04434(A)^{3.2})} \quad (6)$$

where:

A = FBT result from Procedure A, and
B = FBT result from Procedure B.

NOTE 9—See Appendix X2 for the relationship with Test Method D6426.

13. Keywords

13.1 automotive diesel; biodiesel; filterability; filter blocking tendency (FBT); gas oil; marine diesel; middle distillates

ANNEX

(Mandatory Information)

A1. APPARATUS DETAILS

A1.1 *General*—The apparatus, as shown diagrammatically in Fig. A1.1, is available as a complete unit comprising pressure and temperature measurement, automated calculation of filter blocking tendency and a graphical representation of filterability. It can also be constructed from the individual components described below, however the precision of the test method could be affected.[7]

A1.1.1 *Piston Pump,* capable of delivering fuel at a constant rate of 20 mL ± 1 mL/min and incorporating a mechanical means of adjusting and calibrating the flow. The flow adjustment shall have a locking mechanism.

A1.1.2 *Pulse Damper,* a mechanism to produce smooth flow of fuel to the filter unit.

A1.1.3 *Pressure Gauge,* calibrated and graduated covering the range 0 kPa to 105 kPa gauge pressure, with an accuracy of ±1 kPa.

A1.1.4 *Over-Pressure Sensor,* fitted to automated apparatus between the pump and the damper to stop the pump if the pressure exceeds 200 kPa.

A1.1.5 *Pressure Relief Valve,* located on the front of the arm holding the filter assembly. Used to relieve the pressure if the filter becomes blocked and during verification and calibration of the pressure sensor in automated apparatus.

A1.1.6 *Fuel Beakers,* made of glass, or other suitable transparent materials, with a capacity of at least 400 mL with 10 mL graduations.

NOTE A1.1—Fuel reservoir beakers made of plastic-type materials can cause particulates to adhere to the walls of the beaker due to static effects and can affect the result.

A1.1.7 *Printer,* optional with automated apparatus to record results and graphically represent the pressure/flow characteristics (see Appendix X1).

A1.1.8 *Input Suction Tube,* for drawing up the test portion from the fuel reservoir beaker. The top of the input aperture is nominally 5 mm from the bottom of the liquid.

A1.1.9 Fuel input and output assemblies, shall be directly grounded (earthed) to avoid the build-up of static electricity.

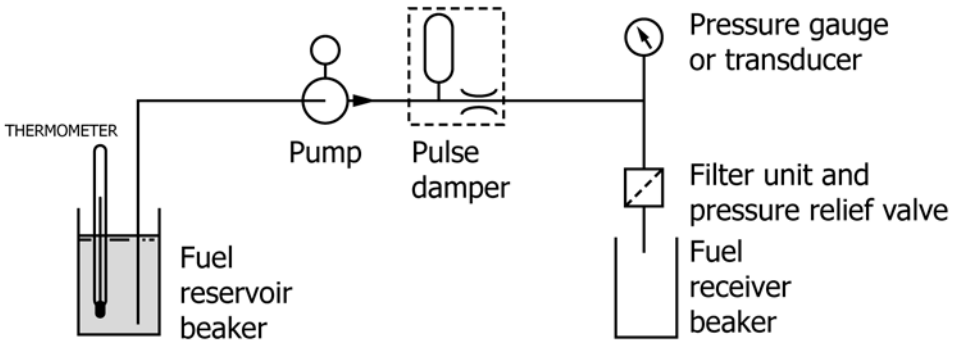

FIG. A1.1 Flow Diagram of Filtration Test Apparatus

Document Preview
(https://standards.iteh.ai)
ASTM D2068-20