# International Standard ISO 4757

INTERNATIONAL ORGANIZATION FOR STANDARDIZATION•МЕЖДУНАРОДНАЯ ОРГАНИЗАЦИЯ ПО СТАНДАРТИЗАЦИИ•ORGANISATION INTERNATIONALE DE NORMALISATION

## Cross recesses for screws

*Empreintes cruciformes pour vis*

**First edition — 1983-08-01**



**UDC 621.882.215.6** **Ref. No. ISO 4757-1983 (E)**

**Descriptors :** fasteners, screws, cruciform recessed screws, dimensions.

Price based on 9 pages

## Foreword

ISO (the International Organization for Standardization) is a worldwide federation of national standards bodies (ISO member bodies). The work of developing International Standards is carried out through ISO technical committees. Every member body interested in a subject for which a technical committee has been authorized has the right to be represented on that committee. International organizations, governmental and non-governmental, in liaison with ISO, also take part in the work.

*Draft International Standards adopted by the technical committees are circulated to* the member bodies for approval before their acceptance as International Standards by the ISO Council.



International Standard ISO 4757 was developed by Technical Committee ISO/TC 2, *Fasteners*, and was circulated to the member bodies in December 1981.

It has been approved by the member bodies of the following countries:



| | | |
|---|---|---|
| Australia | Germany, F.R. | Norway |
| Austria | Hungary | Poland |
| Belgium | India | Romania |
| Brazil | Ireland | South Africa, Rep. of |
| Canada | Italy | Spain |
| China | Japan | Sri Lanka |
| Czechoslovakia | Korea, Dem. P. Rep. of | Sweden |
| Denmark | Korea, Rep. of | Switzerland |
| Egypt, Arab Rep. of | Mexico | USA |
| Finland | Netherlands | USSR |
| France | New Zealand | |

The member body of the following country expressed disapproval of the document on technical grounds:

United Kingdom



Printed in Switzerland

# Cross recesses for screws



## 1 Scope and field of application



This International Standard defines two types of cross recesses for screws:

— recess type H;

— recess type Z.

Included in this International Standard is a method of penetration gauging for both types.

## 2 Recess type H

### 2.1 Dimensions

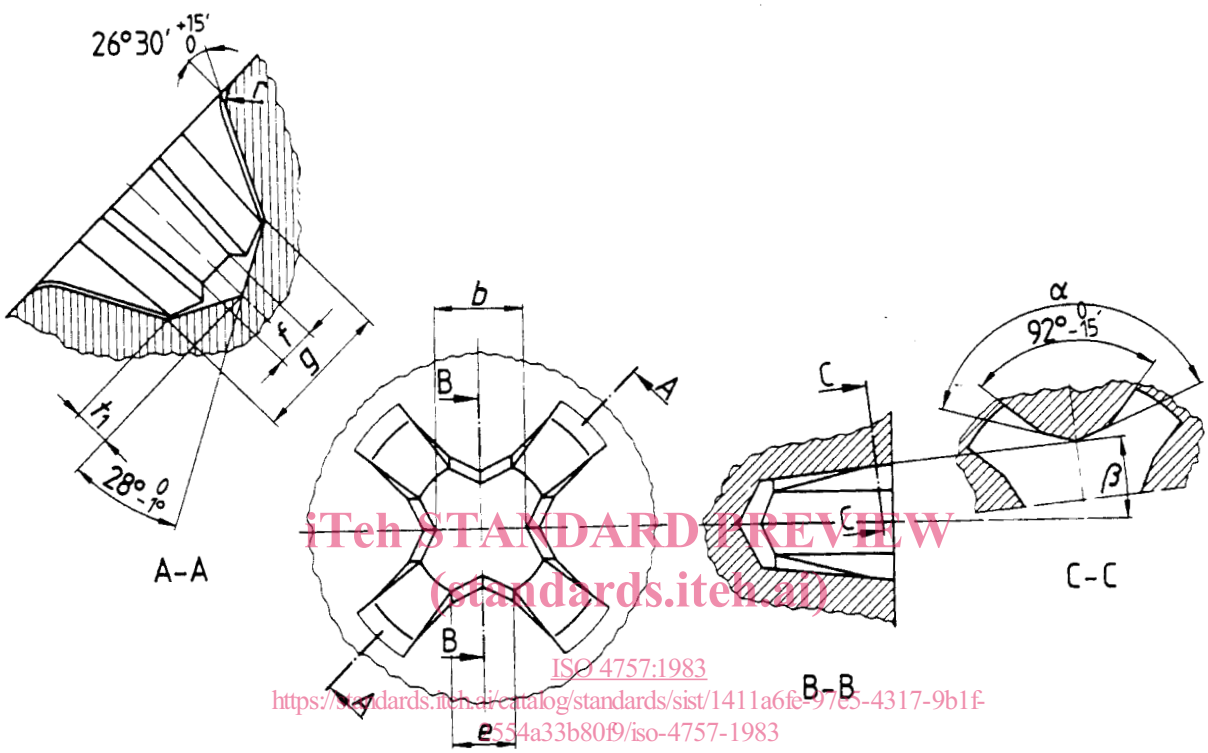

**Table 1 — Recess type H**

Dimensions in millimetres

| Recess No. | | 0 | 1 | 2 | 3 | 4 |
|---|---|---|---|---|---|---|
| $b$ | $^{0}_{-0,03}$ | 0,61 | 0,97 | 1,47 | 2,41 | 3,48 |
| $e$ | | 0,26 - 0,36 | 0,41 - 0,46 | 0,79 - 0,84 | 1,98 - 2,03 | 2,39 - 2,44 |
| $g$ | $^{+0,05}_{0}$ | 0,81 | 1,27 | 2,29 | 3,81 | 5,08 |
| $f$ | | 0,31 - 0,36 | 0,51 - 0,56 | 0,66 - 0,74 | 0,79 - 0,86 | 1,19 - 1,27 |
| $r$ | nom. | 0,3 | 0,5 | 0,6 | 0,8 | 1 |
| $t_1$ | ref. | 0,22 | 0,34 | 0,61 | 1,01 | 1,35 |
| $\alpha$ | $^{0}_{-15'}$ | 1) | 138° | 140° | 146° | 153° |
| $\beta$ | $^{+15'}_{0}$ | 7° | 7° | 5° 45′ | 5° 45′ | 7° |

1) This will be replaced by $r$ min. 0,25 mm; $r$ max. 0,36 mm.

Dimensions shown are theoretical values.

## 2.2 Recess penetration gauging and gauge dimensions for recess type H

The penetration depth of the depth gauge (minimum dimension) is indicated in the different product standards. It is the test dimension for the usability of the cross recess.



The point of the gauge is identical with the point of the respective screwdriver. A sleeve serves to guide the gauge and fix the reference plane. This plane passes through the point of intersection of the recess wings and the top surface of the screw head. It corresponds thus to the surface of a screw with flat head. In the case of crowned screw heads, it lies below the crown in the transition area from the recess wings to the surface of the head. For these screw heads, the reference plane is fixed with the help of the bearing surfaces of the gauge sleeve.



The penetration depth of the gauge is measured from the reference plane by using a dial gauge. The zero and control positions of the depth gauge can be found on a flat surface.

Due to the permissible error for the core thickness $b$ of the gauge point, an inaccuracy of up to 0,13 mm can arise when measuring the penetration depth.

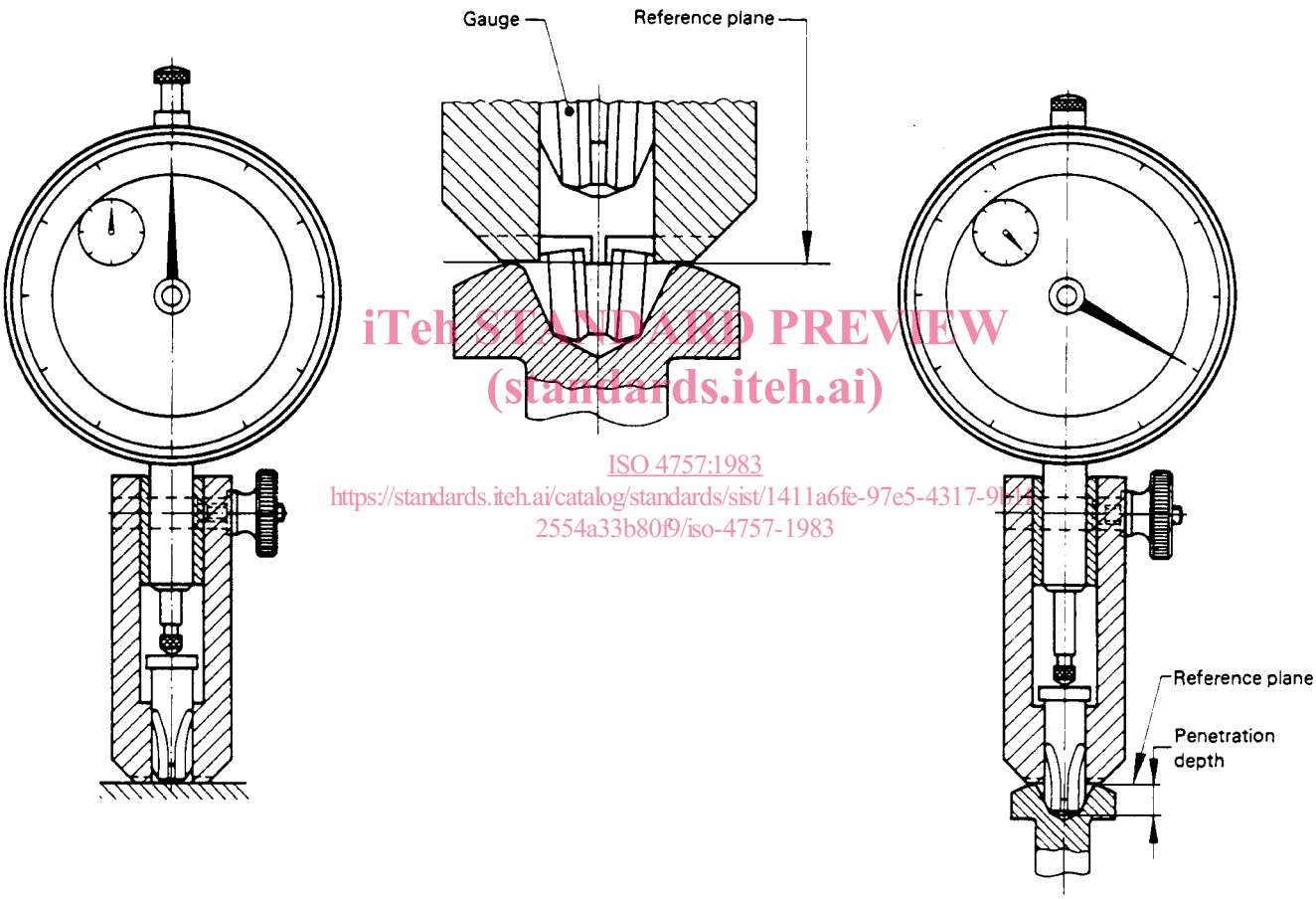


Zero position

Control position

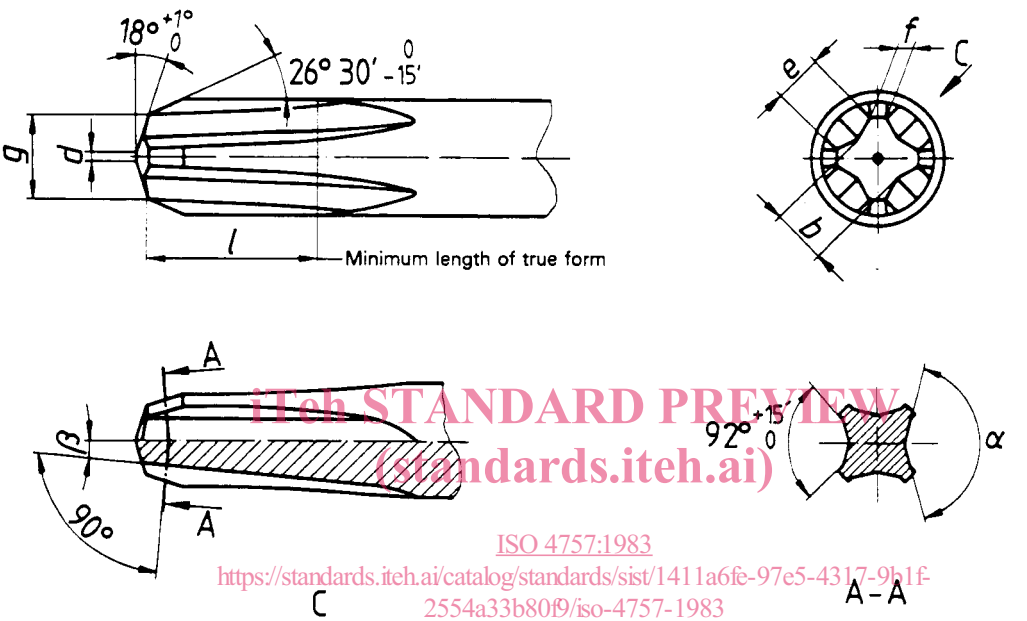




**Table 2 — Gauge dimensions for recess type H**

Dimensions in millimetres

| Gauge No. | | 0 | 1 | 2 | 3 | 4 |
|---|---|---|---|---|---|---|
| $b$ | $^{0}_{-0,025}$ | 0,64 | 1,001 | 1,539 | 2,497 | 3,574 |
| $g$ | $^{+0,025}_{0}$ | 0,813 | 1,27 | 2,286 | 3,81 | 5,08 |
| $d$ | $^{+0,13}_{0}$ | 0,25 | 0,38 | 0,38 | 0,38 | 0,38 |
| $e$ | $^{0}_{-0,025}$ | 0,315 | 0,513 | 1,102 | 2,098 | 2,738 |
| $f$ | $^{0}_{-0,06}$ | 0,31 | 0,51 | 0,64 | 0,79 | 1,12 |
| $l$ | min. | 3,17 | 3,17 | 4,78 | 7,14 | 8,74 |
| $\alpha$ | $^{+15'}_{0}$ | 1) | 138° | 140° | 146° | 153° |
| $\beta$ | $^{0}_{-15'}$ | 7° | 7° | 5° 45′ | 5° 45′ | 7° |

1) This will be replaced by $r$ = 0,25 ± 0,025 mm.

## 3 Recess type Z

### 3.1 Dimensions

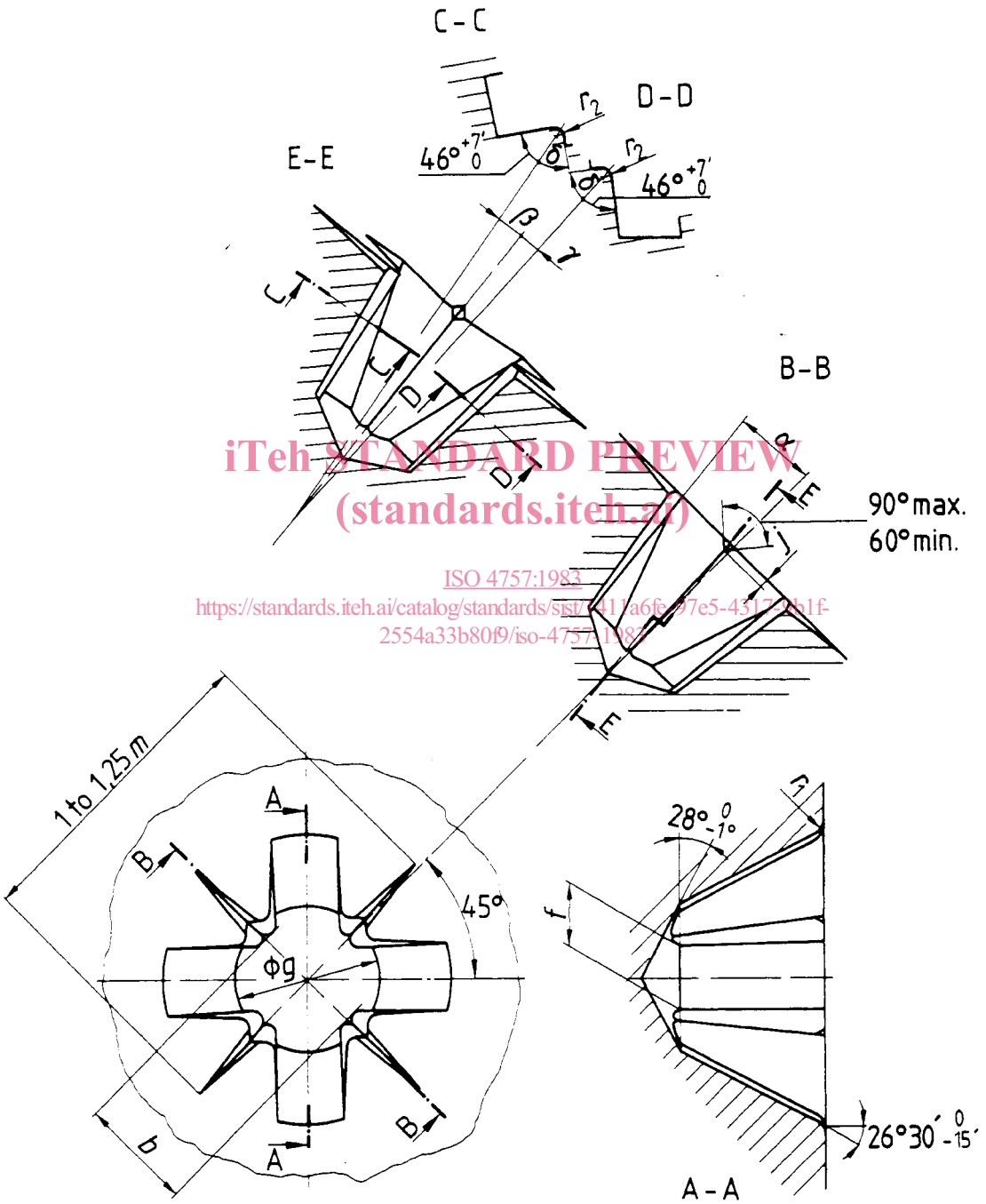

**Table 3 — Recess type Z**

Dimensions in millimetres

| Recess No. | | 0 | 1 | 2 | 3 | 4 |
|---|---|---|---|---|---|---|
| $b$ | $^{0}_{-0,05}$ | 0,76 | 1,27 | 1,83 | 2,72 | 3,96 |
| $f$ | $^{0}_{-0,025}$ | 0,48 | 0,74 | 1,03 | 1,42 | 2,16 |
| $g$ | $^{0}_{-0,05}$ | 0,86 | 1,32 | 2,34 | 3,86 | 5,08 |
| $r_1$ | max. | 0,30 | 0,30 | 0,38 | 0,51 | 0,64 |
| $r_2$ | max. | 0,10 | 0,13 | 0,15 | 0,25 | 0,38 |
| $j$ | max. | 0,13 | 0,15 | 0,15 | 0,20 | 0,20 |
| $\alpha$ | $^{+15'}_{0}$ | 7° | 7° | 5° 45′ | 5° 45′ | 7° |
| $\beta$ | $^{0}_{-15'}$ | 7° 45′ | 7° 45′ | 6° 20′ | 6° 20′ | 7° 45′ |
| $\gamma$ | $^{0}_{-15'}$ | 4° 23′ | 4° 23′ | 3° | 3° | 4° 23′ |
| $\delta$ | $^{0}_{-7'}$ | 46° | 46° | 46° | 56° 15′ | 56° 15′ |

Dimensions shown are theoretical values.