SLOVENSKI STANDARD
SIST ISO 4762:1996

01-april-1996

Vijaki z valjasto glavo in notranjim šestkotnikom - Razred izdelave A

Hexagon socket head cap screws -- Product grade A

Vis à tête cylindrique à six pans creux -- Grade A

iTeh STANDARD PREVIEW
(standards.iteh.ai)

Ta slovenski standard je istoveten z: **ISO 4762:1989**

SIST ISO 4762:1996
https://standards.iteh.ai/catalog/standards/sist/29c89053-2300-431d-a781-d91c7965cfc2/sist-iso-4762-1996

ICS:

21.060.10 Sorniki, vijaki, stebelni vijaki Bolts, screws, studs

SIST ISO 4762:1996 **en**

2003-01.Slovenski inštitut za standardizacijo. Razmnoževanje celote ali delov tega standarda ni dovoljeno.

SIST ISO 4762:1996

iTeh STANDARD PREVIEW
(standards.iteh.ai)

SIST ISO 4762:1996
https://standards.iteh.ai/catalog/standards/sist/29c89053-2300-431d-a781-d91c7965cfc2/sist-iso-4762-1996

SIST ISO 4762:1996

INTERNATIONAL STANDARD

ISO 4762

Second edition
1989-05-01

Hexagon socket head cap screws — Product grade A

Vis à tête cylindrique à six pans creux — Grade A

iTeh STANDARD PREVIEW
(standards.iteh.ai)
SIST ISO 4762:1996
https://standards.iteh.ai/catalog/standards/sist/29c89053-2300-431d-a781-d91c7965cfc2/sist-iso-4762-1996

Reference number
ISO 4762 : 1989 (E)

SIST ISO 4762:1996

Foreword

ISO (the International Organization for Standardization) is a worldwide federation of national standards bodies (ISO member bodies). The work of preparing International Standards is normally carried out through ISO technical committees. Each member body interested in a subject for which a technical committee has been established has the right to be represented on that committee. International organizations, governmental and non-governmental, in liaison with ISO, also take part in the work. ISO collaborates closely with the International Electrotechnical Commission (IEC) on all matters of electrotechnical standardization.

Draft International Standards adopted by the technical committees are circulated to the member bodies for approval before their acceptance as International Standards by the ISO Council. They are approved in accordance with ISO procedures requiring at least 75 % approval by the member bodies voting.

iTeh STANDARD PREVIEW
(standards.iteh.ai)

International Standard ISO 4762 was prepared by Technical Committee ISO/TC 2, *Fasteners*.

SIST ISO 4762:1996
https://standards.iteh.ai/catalog/standards/sist/20e80053-2300-431d-a781-d91c7965cfc2/sist-iso-4762-1996

This second edition cancels and replaces the first edition (ISO 4762 : 1977), of which it constitutes a technical revision.

© ISO 1989
All rights reserved. No part of this publication may be reproduced or utilized in any form or by any means, electronic or mechanical, including photocopying and microfilm, without permission in writing from the publisher.

International Organization for Standardization
Case postale 56 • CH-1211 Genève 20 • Switzerland

Printed in Switzerland

SIST ISO 4762:1996

Hexagon socket head cap screws — Product grade A

iTeh STANDARD PREVIEW
(standards.iteh.ai)

1 Scope

This International Standard specifies the characteristics of hexagon socket head cap screws with metric dimensions and nominal thread diameters, d, from 1,6 mm up to and including 36 mm, of product grade A.

SIST ISO 4762:1996
https://standards.iteh.ai/catalog/standards/sist/...-iso-4762-1996

If, in special cases, specifications other than those listed in this International Standard are required, they shall be selected from existing International Standards, for example ISO 261, ISO 888, ISO 898-1, ISO 965-2, ISO 3506 and ISO 4759-1.

2 Normative references

The following standards contain provisions which, through reference in this text, constitute provisions of this International Standard. At the time of publication, the editions indicated were valid. All standards are subject to revision, and parties to agreements based on this International Standard are encouraged to investigate the possibility of applying the most recent editions of the standards listed below. Members of IEC and ISO maintain registers of currently valid International Standards.

ISO 225 : 1983, *Fasteners — Bolts, screws and nuts — Symbols and designations of dimensions.*

ISO 261 : 1973, *ISO general purpose metric screw threads — General plan.*

ISO 888 : 1976, *Bolts, screw and studs — Nominal lengths, and thread lengths for general purpose bolts and screws.*

ISO 898-1 : 1988, *Mechanical properties of fasteners — Part 1: Bolts, screws and studs.*

ISO 965-2 : 1980, *ISO general purpose metric screw threads — Tolerances — Part 2: Limits of sizes for general purpose bolt and nut threads — Medium quality.*

ISO 3269 : 1984, *Fasteners — Acceptance inspection.*

ISO 3506 : 1979, *Corrosion-resistant stainless steel fasteners — Specifications.*

ISO 4042 : 1989, *Threaded components — Electroplated coatings.*

ISO 4753 : 1983, *Fasteners — Ends of parts with external metric ISO thread.*

ISO 4759-1 : 1978, *Tolerances for fasteners — Part 1: Bolts, screws and nuts with thread diameters between* 1,6 *(inclusive) and* 150 mm *(inclusive) and product grades A, B and C.*

ISO 6157-1 : 1988, *Fasteners — Surface discontinuities — Part 1: Bolts, screws and studs for general requirements.*

ISO 6157-3 : 1988, *Fasteners — Surface discontinuities — Part 3: Bolts, screws and studs for special requirements.*

ISO 8839 : 1986, *Mechanical properties of fasteners — Bolts, screws, studs and nuts made of non-ferrous metals.*

ISO 8992 : 1986, *Fasteners — General requirements for bolts, screws and nuts.*

SIST ISO 4762:1996

3 Dimensions

NOTE — Symbols and designation of dimensions are specified in ISO 225.

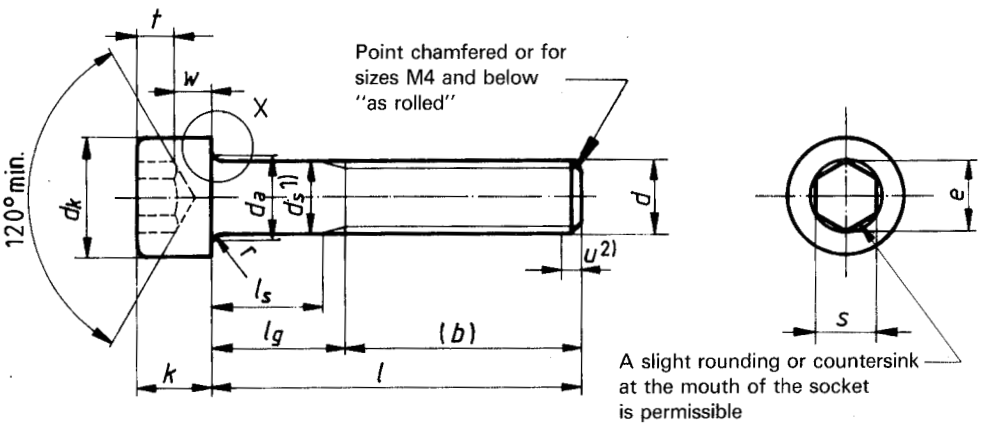

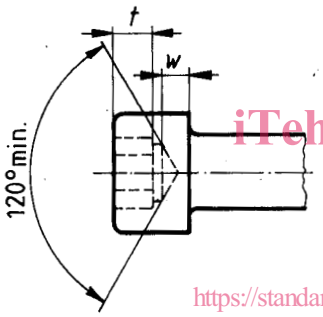

iTeh STANDARD PREVIEW
(standards.iteh.ai)
SIST ISO 4762:1996
https://standards.iteh.ai/catalog/standards/sist/29c89053-2300-431d-a781-d91c7965cfc2/sist-iso-4762-1996

X

Maximum underhead fillet

$l_{f\max} = 1{,}7\ r_{\max}$

$r_{\max} = \dfrac{d_{a\max} - d_{s\max}}{2}$

$r_{\min}$, see table 1

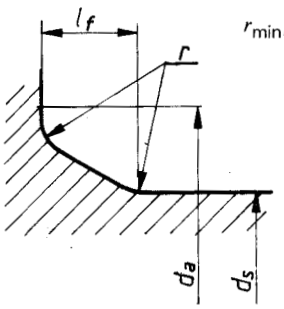

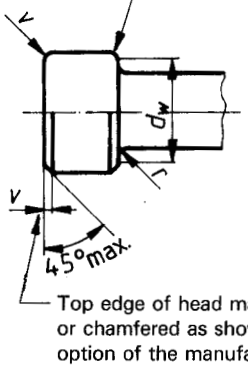

Bottom edge of head may be radiused or chamfered to d_w but in every case must be deburred

Top edge of head may be radiused or chamfered as shown at the option of the manufacturer

1) d_s applies to positive values of l_s.

2) Incomplete thread $u \leqslant 2\,P$

SIST ISO 4762:1996

Table 1

Dimensions in millimetres

Thread (d)		M1,6	M2	M2,5	M3	M4	M5	M6	M8
P [1]		0,35	0,4	0,45	0,5	0,7	0,8	1	1,25
b [2]	ref.	15	16	17	18	20	22	24	28
d_k	max. [3]	3	3,8	4,5	5,5	7	8,5	10	13
	max. [4]	3,14	3,98	4,68	5,68	7,22	8,72	10,22	13,27
	min.	2,86	3,62	4,32	5,32	6,78	8,28	9,78	12,73
d_a	max.	2	2,6	3,1	3,6	4,7	5,7	6,8	9,2
d_s	max.	1,6	2	2,5	3	4	5	6	8
	min.	1,46	1,86	2,36	2,86	3,82	4,82	5,82	7,78
e	min. [5]	1,73	1,73	2,3	2,87	3,44	4,58	5,72	6,86
l_f	max.	0,34	0,51	0,51	0,51	0,6	0,6	0,68	1,02
k	max.	1,6	2	2,5	3	4	5	6	8
	min.	1,46	1,86	2,36	2,86	3,82	4,82	5,7	7,64
r	min.	0,1	0,1	0,1	0,1	0,2	0,2	0,25	0,4
s	nom.	1,5	1,5	2	2,5	3	4	5	6
	min.	1,52	1,52	2,02	2,52	3,02	4,02	5,02	6,02
	max. [6]	1,545	1,545	2,045	2,56	3,08	4,095	5,095	6,095
	max. [7]	1,56	1,56	2,06	2,58	3,08	4,095	5,14	6,14
t	min.	0,7	1	1,1	1,3	2	2,5	3	4
v	max.	0,16	0,2	0,25	0,3	0,4	0,5	0,6	0,8
d_w	min.	2,72	3,48	4,18	5,07	6,53	8,03	9,38	12,33
w	min.	0,55	0,55	0,85	1,15	1,4	1,9	2,3	3,3

l			Shank length l_s and grip length l_g [8]															
			l_s	l_g	l_s	l_g	l_s	l_g	l_s	l_g	l_s	l_g	l_s	l_g	l_s	l_g	l_s	l_g
nom.	min.	max.	min.	max.	min.	max.	min.	max.	min.	max.	min.	max.	min.	max.	min.	max.	min.	max.
2,5	2,3	2,7																
3	2,8	3,2																
4	3,76	4,24																
5	4,76	5,24																
6	5,76	6,24																
8	7,71	8,29																
10	9,71	10,29																
12	11,65	12,35																
16	15,65	16,35																
20	19,58	20,42			2	4												
25	24,58	25,42					5,75	8	4,5	7								
30	29,58	30,42							9,5	12	6,5	10	4	8				
35	34,5	35,5									11,5	15	9	13	6	11		
40	39,5	40,5									16,5	20	14	18	11	16	5,75	12
45	44,5	45,5											19	23	16	21	10,75	17
50	49,5	50,5											24	28	21	26	15,75	22
55	54,4	55,6													26	31	20,75	27
60	59,4	60,6													31	36	25,75	32
65	64,4	65,6															30,75	37
70	69,4	70,6															35,75	42
80	79,4	80,6															45,75	52

iTeh STANDARD PREVIEW
(standards.iteh.ai)
SIST ISO 4762:1996
https://standards.iteh.ai/catalog/standards/sist/29c89053-2300-431d-a781-d91c7965cfc2/sist-iso-4762-1996

1) P = pitch of the thread.
2) For lengths below the thick dashed line.
3) For plain heads.
4) For knurled heads.
5) $e_{min} = 1{,}14\ s_{min}$
6) For property class 12.9.
7) For all other property classes.
8) The range of commercial lengths is between the continuous thick lines. Lengths above the thick dashed line are threaded to the head within $3P$. Lengths below the thick dashed line have values of l_g and l_s in accordance with the following formulae:

$l_{g\,max} = l_{nom} - b$

$l_{s\,min} = l_{g\,max} - 5P$

SIST ISO 4762:1996

Table 1 (*concluded*)

Dimensions in millimetres

Thread (d)		M10	M12	(M14)	M16	M20	M24	M30	M36
P [1]		1,5	1,75	2	2	2,5	3	3,5	4
b [2]	ref.	32	36	40	44	52	60	72	84
d_k	max. [3]	16	18	21	24	30	36	45	54
	max. [4]	16,27	18,27	21,33	24,33	30,33	36,39	45,39	54,46
	min.	15,73	17,73	20,67	23,67	29,67	35,61	44,61	53,54
d_a	max.	11,2	13,7	15,7	17,7	22,4	26,4	33,4	39,4
d_s	max.	10	12	14	16	20	24	30	36
	min.	9,78	11,73	13,73	15,73	19,67	23,67	29,67	35,61
e	min. [5]	9,15	11,43	13,72	16	19,44	21,73	25,15	30,85
l_f	max.	1,02	1,45	1,45	1,45	2,04	2,04	2,89	2,89
k	max.	10	12	14	16	20	24	30	36
	min.	9,64	11,57	13,57	15,57	19,48	23,48	29,48	35,38
r	min.	0,4	0,6	0,6	0,6	0,8	0,8	1	1
s	nom.	8	10	12	14	17	19	22	27
	min.	8,025	10,025	12,032	14,032	17,05	19,065	22,065	27,065
	max. [6]	8,115	10,115	12,142	14,142	17,23	19,275	22,275	27,275
	max. [7]	8,175	10,175	12,212	14,212				
t	min.	5	6	7	8	10	12	15,5	19
v	max.	1	1,2	1,4	1,6	2	2,4	3	3,6
d_w	min.	15,33	17,23	20,17	23,17	28,87	34,81	43,61	52,54
w	min.	4	4,8	5,8	6,8	8,6	10,4	13,1	15,3

l			Shank length l_s and grip length l_g [8]															
nom.	min.	max.	l_s min.	l_g max.	l_s min.	l_g max.	l_s min.	l_g max.	l_s min.	l_g max.	l_s min.	l_g max.	l_s min.	l_g max.	l_s min.	l_g max.	l_s min.	l_g max.
16	15,65	16,35																
20	19,58	20,42																
25	24,58	25,42																
30	29,58	30,42																
35	34,5	35,5																
40	39,5	40,5																
45	44,5	45,5	5,5	13														
50	49,5	50,5	10,5	18														
55	54,4	55,6	15,5	23	10,25	19												
60	59,4	60,6	20,5	28	15,25	24	10	20										
65	64,4	65,6	25,5	33	20,25	29	15	25	11	21								
70	69,4	70,6	30,5	38	25,25	34	20	30	16	26								
80	79,4	80,6	40,5	48	35,25	44	30	40	26	36	15,5	28						
90	89,3	90,7	50,5	58	45,25	54	40	50	36	46	25,5	38	15	30				
100	99,3	100,7	60,5	68	55,25	64	50	60	46	56	35,5	48	25	40				
110	109,3	110,7			65,25	74	60	70	56	66	45,5	58	35	50	20,5	38		
120	119,3	120,7			75,25	84	70	80	66	76	55,5	68	45	60	30,5	48	16	36
130	129,2	130,8					80	90	76	86	65,5	78	55	70	40,5	58	26	46
140	139,2	140,8					90	100	86	96	75,5	88	65	80	50,5	68	36	56
150	149,2	150,8							96	106	85,5	98	75	90	60,5	78	46	66
160	159,2	160,8							106	116	95,5	108	85	100	70,5	88	56	76
180	179,2	180,8									115,5	128	105	120	90,5	108	76	96
200	199,075	200,925									135,5	148	125	140	110,5	128	96	116

iTeh STANDARD PREVIEW
(standards.iteh.ai)
SIST ISO 4762:1996
https://standards.iteh.ai/catalog/standards/sist/29c89053-2300-431d-a781-d91c7965cfc2/sist-iso-4762-1996

1) P = pitch of the thread.
2) For lengths below the thick dashed line.
3) For plain heads.
4) For knurled heads.
5) $e_{min} = 1{,}14\, s_{min}$
6) For property class 12.9.
7) For all other property classes.
8) The range of commercial lengths is between the continuous thick lines. Lengths above the thick dashed line are threaded to the head within $3P$. Lengths below the thick dashed line have values of l_g and l_s in accordance with the following formulae:

$l_{gmax} = l_{nom} - b$

$l_{smin} = l_{gmax} - 5P$