This international standard was developed in accordance with internationally recognized principles on standardization established in the Decision on Principles for the Development of International Standards, Guides and Recommendations issued by the World Trade Organization Technical Barriers to Trade (TBT) Committee.

Designation: E837 – 20

Standard Test Method for Determining Residual Stresses by the Hole-Drilling Strain-Gage Method[1]

This standard is issued under the fixed designation E837; the number immediately following the designation indicates the year of original adoption or, in the case of revision, the year of last revision. A number in parentheses indicates the year of last reapproval. A superscript epsilon (ε) indicates an editorial change since the last revision or reapproval.

INTRODUCTION

The hole-drilling strain-gage method determines residual stresses near the surface of an isotropic linear-elastic material. It involves attaching a strain rosette to the surface, drilling a hole at the geometric center of the rosette, and measuring the resulting relieved strains. The residual stresses within the removed material are then determined from the measured strains using a series of equations.

1. Scope

1.1 *Residual Stress Determination:*

1.1.1 This test method specifies a hole-drilling procedure for determining in-plane residual stresses near the surface of an isotropic linearly elastic material. It is applicable to residual stress determinations where the stresses do not vary significantly across the diameter of the drilled hole. The measured stresses are the in-plane residual stresses that exist within the depth of the drilled hole. Stress sensitivity rapidly decreases with depth from the measured surface and deep interior stresses cannot be evaluated. The measured residual stresses are described as "uniform" if they remain approximately constant within the hole depth, "non-unifom" if they vary significantly.

1.1.2 In general, "blind" holes are used, where the depth of the drilled hole and therefore the depth of the residual stress evaluation is less than the workpiece thickness. However, for a thin workpiece, it is also possible to do through-thickness measurements of uniform (membrane) stresses using a through-hole.

1.2 *Stress Measurement Range:*

1.2.1 This test method applies in cases where material behavior is linear-elastic. When near-yeild residual stresses are present, it is possible for local yielding to occur due to the stress concentration around the drilled hole. Satisfactory measurement results can be achieved providing the residual stresses do not exceed about 80 % of the material yield stress for blind-hole drilling and about 50 % of the material yield stress for through-hole drilling.

1.3 *Workpiece Damage:*

1.3.1 The hole-drilling method is often described as "semi-destructive" because the damage that it causes is localized and often does not significantly affect the usefulness of the workpiece. In contrast, most other mechanical methods for measuring residual stresses substantially destroy the workpiece. Since hole drilling does cause some damage, this test method should be applied only in those cases either where the workpiece is expendable, or where the introduction of a small shallow hole will not significantly affect the usefulness of the workpiece.

1.4 *This standard does not purport to address all of the safety concerns, if any, associated with its use. It is the responsibility of the user of this standard to establish appropriate safety, health, and environmental practices and determine the applicability of regulatory limitations prior to use.*

1.5 *This international standard was developed in accordance with internationally recognized principles on standardization established in the Decision on Principles for the Development of International Standards, Guides and Recommendations issued by the World Trade Organization Technical Barriers to Trade (TBT) Committee.*

2. Referenced Documents

2.1 *ASTM Standards:*[2]

E6 Terminology Relating to Methods of Mechanical Testing

E251 Test Methods for Performance Characteristics of Metallic Bonded Resistance Strain Gages

3. Terminology

3.1 *Definitions of terms common to mechanical testing:*

[1] This test method is under the jurisdiction of ASTM Committee E28 on Mechanical Testing and is the direct responsibility of Subcommittee E28.13 on Residual Stress Measurement.

Current edition approved Oct. 1, 2020. Published November 2020. Originally approved in 1981. Last previous edition approved in 2013 as E837 – 13a DOI: 10.1520/E0837-20.

[2] For referenced ASTM standards, visit the ASTM website, www.astm.org, or contact ASTM Customer Service at service@astm.org. For *Annual Book of ASTM Standards* volume information, refer to the standard's Document Summary page on the ASTM website.

Copyright © ASTM International, 100 Barr Harbor Drive, PO Box C700, West Conshohocken, PA 19428-2959. United States

3.1.1 The terms accuracy, calibration, lead wire, precision, residual stress, resolution, verification, and yield strength are used as defined in Terminology E6.

3.2 *Definitions of Terms Specific to This Standard:*

3.2.1 *intermediate workpiece, n*—a workpiece whose thickness is between that of thin and thick workpieces.

3.2.2 *thick workpiece, n*—a workpiece whose thickness is sufficiently large that its strain versus hole depth response is independent of its thickness.

3.2.3 *thin workpiece, n*—a workpiece whose thickness is sufficiently small that its strain versus hole depth response is proportional to its thickness.

3.3 *Symbols:*

$\bar{a}$ = calibration constant for isotropic stresses
$\bar{b}$ = calibration constant for shear stresses
$\bar{a}_{jk}$ = calibration matrix for isotropic stresses
$\bar{b}_{jk}$ = calibration matrix for shear stresses
D = diameter of the gage circle, see Table 1.
D_0 = diameter of the drilled hole
E = Young's modulus
F = fractional workpiece thickness
f = fractional hole diameter
h_j = hole depth at step j
H_k = stress depth at step k
j = number of hole depth steps so far
k = sequence number for stress depth steps
P = uniform isotropic (equi-biaxial) stress
P_k = isotropic stress within hole depth step k
p = uniform isotropic (equi-biaxial) strain
p_k = isotropic strain after hole depth step k
Q = uniform 45° shear stress
Q_k = 45° shear stress within hole depth step k
q = uniform 45° shear strain
q_k = 45° shear strain after hole depth step k
T = uniform x-y shear stress
T_k = x-y shear stress within hole depth step k
t = x-y shear strain
t_k = x-y shear strain after hole depth step k
T = (superscript) matrix transpose
W = workpiece thickness
α_P = regularization factor for **P** stresses
α_Q = regularization factor for **Q** stresses
α_T = regularization factor for **T** stresses
β = clockwise angle from the x-axis (gage 1) to the maximum principal stress direction
ε = relieved strain for "uniform" stress case
ε_j = relieved strain measured after j hole depth steps have been drilled
ν = Poisson's ratio
θ = angle of strain gage from the x-axis
σ_{max} = maximum (more tensile) principal stress
α_{min} = minimum (more compressive) principal stress
σ_x = uniform normal x-stress
$(\sigma_x)_k$ = normal x-stress within hole depth step k
σ_y = uniform normal y-stress
$(\sigma_y)_k$ = normal y-stress within hole depth step k
τ_{xy} = uniform shear xy-stress
$(\tau_{xy})_k$ = shear xy-stress within hole depth step k

4. Summary of Test Method

4.1 *Workpiece:*

4.1.1 A flat uniform surface area away from edges and other irregularities is chosen as the test location within the workpiece of interest. Fig. 1 schematically shows the residual stresses acting at the test location at which a hole is to be drilled. These stresses are assumed to be uniform within the in-plane directions x and y.

NOTE 1—For reasons of pictorial clarity in Fig. 1, the residual stresses are shown as uniformly acting over the entire in-plane region around the test location. In actuality, it is not necessary for the residual stresses to be uniform over such a large region. The surface strains that will be relieved by drilling a hole depend only on the stresses that originally existed at the boundaries of the hole. The stresses beyond the hole boundary do not affect the relieved strains, even though the strains are measured beyond the hole boundary. Because of this, the hole-drilling method provides a very localized measurement of residual stresses.

4.1.2 Fig. 1*(a)* shows the case where the residual stresses in the workpiece are uniform in the depth direction. The in-plane stresses are σ_x, σ_y and τ_{xy} throughout the thickness.

4.1.3 Fig. 1*(b)* shows the case where the residual stresses in the workpiece vary in the depth direction. The calculation method described in this test method represents the stress profile as a staircase shape, where the depth steps correspond to the depth increments used during the hole-drilling measurements. Within depth step k, the in-plane stresses are $(\sigma_x)_k$, $(\sigma_y)_k$

iTeh Standards
(https://standards.iteh.ai)
Document Preview
ASTM E837-20
https://standards.iteh.ai/catalog/standards/sist/88368d45-5c91-49e4-b61f-575b645d0869/astm-e837-20

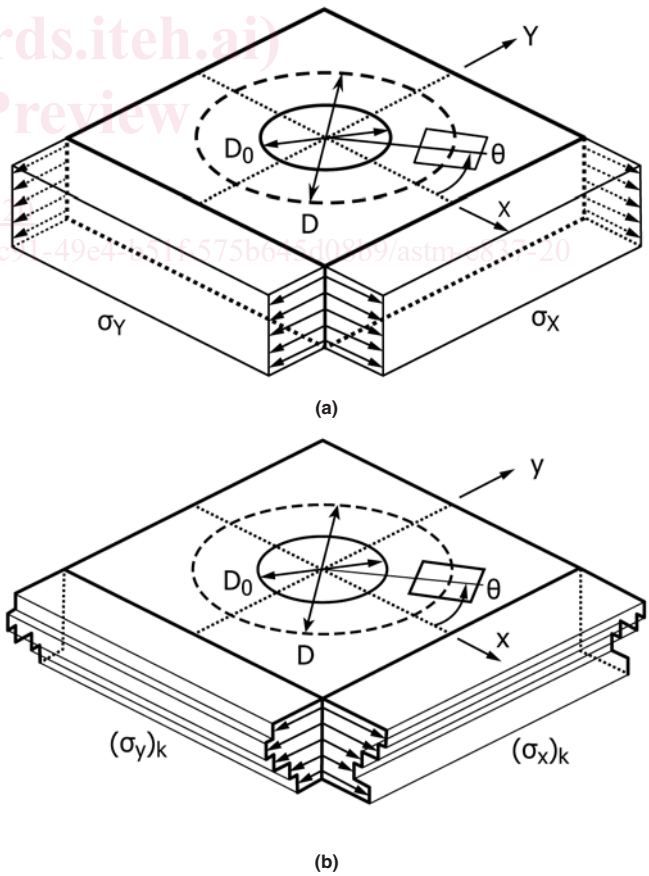

FIG. 1 Hole Geometry and Residual Stresses, (a) Uniform Stresses, (b) Non-uniform Stresses

and $(\tau_{xy})_k$. In cases where there is doubt about the uniformity of the residual stresses, the stresses shall be assumed to be non-uniform.

NOTE 2—The "uniform stress" case occurs when it is known in advance that membrane type stresses dominate the residual stress distribution. However, bending stresses and surface stresses may also be present and cause significant deviations from stress uniformity. Thus, when in doubt, a non-uniform residual stress calculation is a safe general choice. The corresponding "uniform stress" value is an average of the stresses that exist within the hole depth, weighted in favor of the stresses near the measured surface. This value may be useful as an indicator of the general residual stress level.

4.1.4 A workpiece of thickness up to 0.25D for a type A or B rosette, or 0.6D for a type C rosette (see Fig. 4) is described as "thin". The thickness of such a workpiece is sufficiently small that its strain versus hole depth response is proportional to its thickness. A blind hole can be used for "uniform" or "non-uniform" measurements of near-surface residual stresses. Alternatively, a through-hole can be used for through-thickness measurements of uniform membrane stresses.

4.1.5 A workpiece of thickness greater than 0.6D for a type A or B rosette (**1, 2**)[3], or 1.3D for a type C rosette (see Fig. 2) is described as "thick". The thickness of such a workpiece is sufficiently large that its strain versus hole depth response is independent of its thickness. A blind hole may be used for "uniform" or "non-uniform" measurements of near-surface residual stresses.

4.1.6 A workpiece of thickness between the limits specified for "thin" and "thick" workpieces is described as "intermediate". A blind hole may be used for "uniform" or "non-uniform" measurements of near-surface residual stresses.

4.2 *Strain Gage Rosette:*

4.2.1 A strain gage rosette with three or more elements of the general type schematically illustrated in Fig. 3 is attached to the workpiece at the location under consideration. Improved resistance to measurement noise can be achieved by aligning rosette elements 1 and 3 with the principal residual stress directions, if those directions are known in advance. Although desirable, such alignment is not essential to achieving satisfactory results.

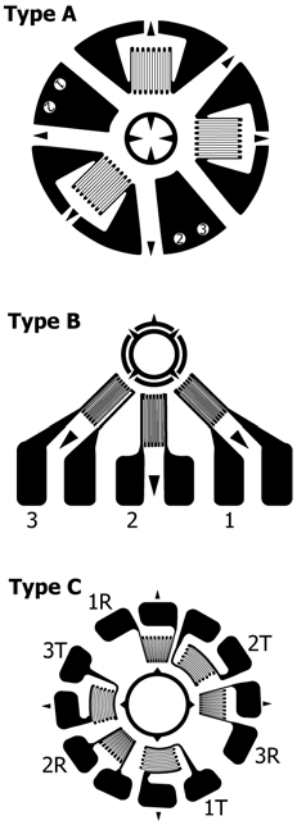

FIG. 2 Hole-Drilling Rosettes

4.3 *Hole-Drilling:*

4.3.1 A hole is drilled in a series of steps at the geometric center of the strain gage rosette.

4.3.2 The residual stresses in the material surrounding the drilled hole are partially relieved as the hole is drilled. The associated relieved strains are measured at a specified sequence of steps of hole depth using a suitable strain-recording instrument.

4.4 *Residual Stress Calculation Method:*

4.4.1 The residual stresses originally existing at the hole location are evaluated from the strains relieved by hole-drilling using mathematical relations based on linear elasticity theory (**3-7**). The relieved strains depend on the residual stresses that existed in the material originally within the hole.

4.4.2 For the uniform stress case shown in Fig. 1 *(a)*, the surface strain relief measured after hole-drilling is:

$$\varepsilon = \frac{1+\nu}{E}\,\bar{a}\,\frac{\sigma_x+\sigma_y}{2} + \frac{1}{E}\,\bar{b}\,\frac{\sigma_x-\sigma_y}{2}\cos 2\theta + \frac{1}{E}\,\bar{b}\,\tau_{xy}\sin 2\theta \tag{1}$$

[3] The boldface numbers in parentheses refer to the list of references at the end of this standard.

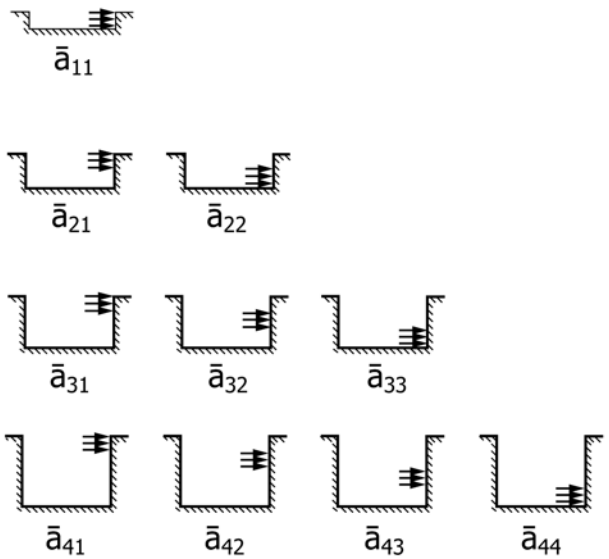

FIG. 4 Physical Interpretation of Coefficients $\bar{a}_{jk}$

iTeh Standards (https://standards.iteh.ai) Document Preview
ASTM E837-20
https://standards.iteh.ai/catalog/standards/sist/88368d45-5c...-3375b645d08b9/astm-e837-20

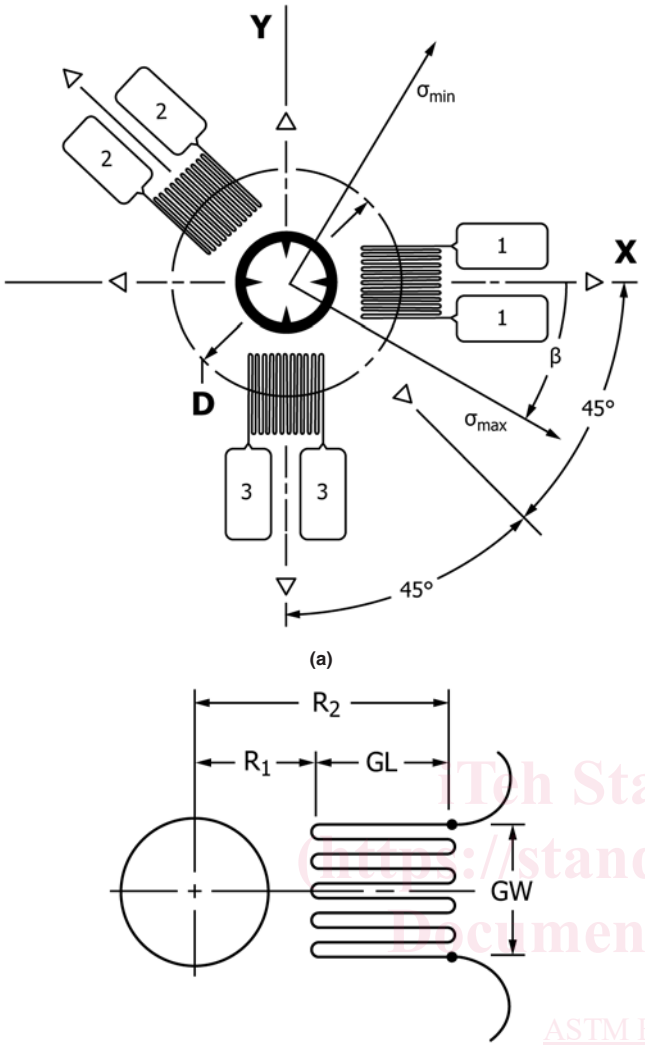

FIG. 3 Schematic Geometry of a Typical Three-Element Clockwise (CW) Hole-Drilling Rosette, (a) Rosette Layout, (b) Detail of a Strain Gage

4.4.3 The calibration constants $\bar{a}$ and $\bar{b}$ indicate the relieved strains due to unit stresses within the hole depth. They are dimensionless, almost material-independent constants. Slightly different values of these constants apply for a through-thickness hole made in a thin workpiece and for a blind hole made in a thick workpiece. Numerical values of these calibration constants have been determined from finite element calculations (**6**, **8**) for standard rosette patterns, and are tabulated in this test method.

4.4.4 For the non-uniform stress case shown in Fig. 1*(b)*, the surface strain relief measured after completing hole depth step j depends on the residual stresses that existed in the material originally contained in all the hole depth steps $1 \le k \le j$:

$$\varepsilon_j = \frac{1+\nu}{E} \sum_{k=1}^{j} \bar{a}_{jk} \left((\sigma_x+\sigma_y)/2\right)_k + \frac{1}{E} \sum_{k=1}^{j} \bar{b}_{jk} \left((\sigma_x-\sigma_y)/2\right)_k \cos 2\theta + \frac{1}{E} \sum_{k=1}^{j} \bar{b}_{jk} \left(\tau_{xy}\right)_k \sin 2\theta \quad (2)$$

4.4.5 The calibration constants $\bar{a}_{jk}$ and $\bar{b}_{jk}$ indicate the relieved strains in a hole j steps deep, due to unit stresses within hole step k. Fig. 4 shows cross-sections of drilled holes for an example sequence where a hole is drilled in four depth steps. Within this sequence, calibration constant represents an intermediate stage where the hole has reached 3 steps deep, and has a unit stress acting within depth step 2. Numerical values of the calibration constants have been determined by finite element calculations (**6**) for standard rosette patterns, and are tabulated in this test method.

4.4.6 Measurement of the relieved strains after a series of hole depth steps provides sufficient information to calculate the stresses σ_x, σ_y and τ_{xy} within each step. From these stresses, the corresponding principal stresses σ_{max} and σ_{min} and their orientation β can be found.

4.4.7 The relieved strains are mostly influenced by the near-surface residual stresses. Interior stresses have influences that diminish with their depth from the surface. Thus, hole-drilling measurements can evaluate only near-surface stresses. Deep interior stresses cannot be identified reliably.

4.4.8 When near-yield residual stresses are present, it is possible for local yielding to occur due to the stress concentration around the drilled hole. Satisfactory measurement results can be achieved providing the residual stresses do not exceed about 80 % of the material yield stress for blind-hole drilling (**9**), and about 50% of the material yield stress for through-hole drilling.

iTeh Standards (https://standards.iteh.ai) Document Preview
ASTM E837-20
https://standards.iteh.ai/catalog/standards/sist/88368d45-5691-45e4-b51f-875b645d08b9/astm-e837-20

5. Significance and Use

5.1 *Summary:*

5.1.1 Residual stresses are present in almost all materials. They can be created during the manufacture or during the life of the material. Residual stresses can be a major factor in the failure of a material, particularly one subjected to alternating service loads or corrosive environments. Residual stress may also be beneficial, for example, the compressive stresses produced by shot peening. The hole-drilling strain-gage technique is a practical general-purpose method for determining residual stresses.

6. Workpiece Preparation

6.1 *Requirements:*

6.1.1 A smooth surface is usually necessary for strain gage application. Abrading or grinding that could appreciably alter the surface stresses shall not be used. Alternatively, chemical etching could be used, thus avoiding the need for mechanical abrasion.

6.1.2 The surface preparation prior to bonding the strain gages shall conform to the recommendations of the manufacturer of the adhesive used to attach the strain gages. A thorough cleaning and degreasing is required. In general, surface preparation should be restricted to those methods that have been demonstrated not to induce or remove significant residual surface stresses. This is particularly important for workpieces that contain sharp near-surface stress gradients.

7. Strain Gages and Instrumentation

7.1 *Rosette Geometry:*

7.1.1 A rosette comprising three single or pairs of strain gage grids shall be used. The numbering scheme for the strain gages follows a clockwise (CW) convention (**10**).

NOTE 3—The gage numbering scheme used for the rosette illustrated in Fig. 3 differs from the counter-clockwise (CCW) convention often used for general-purpose strain gage rosettes and for some other types of residual stress rosette. If a strain gage rosette with CCW gage numbering is used, the residual stress calculation procedure described in this test method still applies. The only changes are that the numbering of gages 1 and 3 are interchanged and that the angle β defining the direction of the most tensile principal stress σ_{max} is reversed and is measured counter-clockwise from the new gage 1.

7.1.2 The gages shall be arranged in a circular pattern, equidistant from the center of the rosette.

7.1.3 The gage axes shall be oriented in each of three directions, *(1)* a reference direction, *(2)* 45° or 135° to the reference direction, and *(3)* perpendicular to the reference direction. Direction *(2)* bisects directions *(1)* and *(3)*, as shown in Fig. 3.

7.1.4 The measurement direction of gage 1 in Fig. 3 is identified as the x-axis. The y-axis is 90° counterclockwise of the x-axis.

7.1.5 The center of the gage circle shall be clearly identifiable.

7.2 *Standardized Rosettes:*

TABLE 1 Rosette Dimensions[A]

Rosette Type	D	GL[B]	GW[B]	R_1[B]	R_2[B]
		Type A			
Conceptual	D	0.309D	0.309D	0.3455D	0.6545D
1/32 in. nominal	0.101 (2.57)	0.031 (0.79)	0.031 (0.79)	0.035 (0.89)	0.066 (1.68)
1/16 in. nominal	0.202 (5.13)	0.062 (1.59)	0.062 (1.59)	0.070 (1.77)	0.132 (3.36)
1/8 in. nominal	0.404 (10.26)	0.125 (3.18)	0.125 (3.18)	0.140 (3.54)	0.264 (6.72)
		Type B			
Conceptual	D	0.309D	0.223D	0.3455D	0.6545D
1/16 in. nominal	0.202 (5.13)	0.062 (1.59)	0.045 (1.14)	0.070 (1.77)	0.132 (3.36)
		Type C			
Conceptual	D	0.176D	30° sector	0.412D	0.588D
1/16 in. nominal	0.170 (4.32)	0.030 (0.76)	30° (30°)	0.070 (1.78)	0.100 (2.54)

[A] Dimensions are in inches (mm).
[B] Rosette dimensions are defined in Fig. 3.

7.2.1 Several different standardized rosettes are available to meet a wide range of residual stress measurement needs. The use of standardized rosette designs greatly simplifies the calculation of the residual stresses. Fig. 2 shows three different rosette types and Table 1 lists their dimensions.

7.2.2 The type A rosette shown in Fig. 2 was first introduced by Rendler and Vigness (**3**). This pattern is available in several different sizes, and is recommended for general-purpose use.

NOTE 4—Choice of rosette size is a primary decision. Larger rosettes tend to give more stable strain measurements because of their greater capacity to dissipate heat. They are also able to identify residual stresses to greater depths. Conversely, smaller rosettes can fit smaller workpieces, require smaller drilled holes, and give more localized measurements.

7.2.3 The type B rosette shown in Fig. 2 has all strain gage grids located on one side. It is useful where measurements need to be made near an obstacle.

7.2.4 The type C rosette shown in Fig. 2 is a special-purpose pattern with three pairs of opposite strain gage grids that are to be connected as three half-bridges. It is useful where large strain sensitivity and high thermal stability are required (**11**).

7.3 *Installation and Use:*

7.3.1 The strain gage rosette should be attached to the workpiece surface such that its center is at least 1.5D from the nearest edge, or the boundary of another material should the workpiece comprise more than one material.

7.3.2 When using a type B rosette adjacent to an obstacle, the center of the rosette should be at least 0.5D from the obstacle, with the set of strain gages diametrically opposite to the obstacle.

7.3.3 The application of the strain gage (bonding, wiring, protective coating) should closely follow the manufacturer's recommendations, and shall ensure the protection of the strain gage grid during the drilling operation.

7.3.4 The strain gages should remain permanently connected and the stability of the installation shall be verified. A resistance to ground of at least 20 000 MΩ is preferable.

7.3.5 Checks should be made to validate the integrity of the gage installation. If possible, a small mechanical load should be applied to the workpiece to induce some modest strains. (See Test Method E251.) The observed strains should return to zero when the load is removed. In addition, a visual inspection of the rosette installation should be made to check for possible areas that are not well bonded. If incomplete bonding is observed, the rosette shall be removed and replaced.

7.4 *Instrumentation:*

7.4.1 The instrumentation for recording of strains shall have a strain resolution of $\pm 1 \times 10^{-6}$, and stability and repeatability of the measurement shall be at least 1×10^{-6}. The lead wires from each gage should be as short as practicable and a three-wire temperature-compensating circuit (**12**) should be used with rosette types A and B. Half-bridge circuits should be used with rosette type C, the resulting outputs of which are designated ε_1, ε_2, and ε_3.

8. Procedure

8.1 *Suggested Preparatory Reading:*

iTeh Standards (https://standards.iteh.ai) Document Preview ASTM E837-20 https://standards.iteh.ai/catalog/standards/sist/88368d45-5c...

8.1.1 References (**13**), (**14**), and (**15**) provide substantial practical guidance about how to make high-quality hole-drilling residual stress measurements. These publications are excellent preparatory reading, particularly for practitioners who infrequently make hole-drilling measurements.

8.2 *Drilling Equipment and Use:*

8.2.1 A device that is equipped to drill a hole in the test workpiece in a controlled manner is required. The device shall be able to drill a hole aligned concentric with the strain gage circle to within ±0.001 in. (0.025 mm). It shall also be able to control the depth of the hole to within ±0.001 in. (0.025 mm).

8.2.2 Several drilling techniques have been investigated and reported to be suitable for the hole drilling method. The most common drilling technique suitable for all but the hardest materials involves the use of carbide burs or endmills driven by a high-speed air turbine or electric motor rotating at 20 000 to 400 000 rpm (**16**). Low-speed drilling using a drill-press or power hand-drill is discouraged because the technique has the tendency to create machining-induced residual stresses at the hole boundary.

8.2.3 For very hard materials, abrasive jet machining can also be useful. This drilling method involves directing a high-velocity stream of air containing fine abrasive particles through a small-diameter nozzle against the workpiece (**7**). Abrasive jet machining can be less suitable for softer materials. Its use should be limited to through-thickness measurements of uniform (membrane) stresses because the hole geometry and depth cannot be controlled sufficiently tightly.

8.2.4 When using burs or endmills, carbide "inverted cone" dental burs or small carbide endmills can be suitable as cutting tools. Commercially available cutters are designed for a wide range of applications, and not all types may be suited for hole drilling residual stress measurements. Thus, a verification of drilling technique and choice of cutter should be done when no prior experience is available. Verification could consist of applying a strain gage rosette to a stress-free workpiece of the same nominal test material produced by the annealing heat treatment method (**3, 7, 16, 17**), and then drilling a hole. If the drilling technique and cutter are satisfactory, the strains produced by the drilling will be small, typically within ±8 με.

8.2.5 If the drilling technique verification shows significant strains induced by the drilling process, or if the test material is known to be difficult to machine, it can be helpful to lubricate the drilling cutter with a suitable lubricating fluid. The fluid used shall be electrically non-conductive. Aqueous or other electrically conductive lubricants shall not be used because they can penetrate the strain gage electrical connections and distort the strain readings.

8.2.6 The radial clearance angles of the cutting edges on the end face of the cutting tool should not exceed 1°. This requirement avoids ambiguities in hole depth identification by ensuring that the depth is uniform within 1 % of the tool diameter.

8.2.7 "Inverted cone" cutters have their maximum diameter at their end face, tapering slightly towards the shank. The tapered geometry provides clearance for the cylindrical cutting edges as the tool cuts the hole. This feature is desirable because it minimizes tool rubbing on the side surface of the hole and possible localized residual stress creation. To avoid ambiguities in hole diameter identification, the taper angle should not exceed 5° on each side.

8.2.8 Some commercially available burs have diagonal chamfers formed at the corners of the side and front cutting edges. This adaptation produces holes with non-uniform depth and so not be used except for through-thickness measurements.

8.2.9 Drilling can be done by plunging, where the cutter is advanced axially. Alternatively, an orbiting technique (**18**) can be used, where the rotation axis of the cutter is deliberately offset from the hole axis. The cutter is advanced axially, and is then orbited so that the offset traces a circular path and the cutter creates a hole larger than its diameter. The direct plunge method has the advantage of simplicity. The orbiting method has the advantages of hole diameter adjustment through choice of offset, use of the cylindrical cutting edges as well as those on the end surface, and clearer chip flow.

8.2.10 Table 2 indicates the target hole diameter ranges appropriate for the various rosette types. Different ranges apply to uniform and non-uniform stress measurements.

8.2.11 The size of the measured strains increases approximately proportionally with the square of the hole diameter. Thus, holes at the larger end of the range are preferred. If using the plunging method, the cutter diameter should equal the target diameter. If using the orbiting method, the cutter diameter should be 60 to 90 % of the target diameter, with an offset chosen to achieve a hole with the target diameter.

8.2.12 All drilling should be done under constant temperature conditions. After each drilling step, the cutter should be stopped to allow time for stabilization of any temperature fluctuations caused by the drilling process and air turbine exhaust. Strain readings should attain their final values for at least five seconds before being accepted.

8.3 *Drilling Procedure for a "Thin" Workpiece with Uniform Through-Thickness Stresses:*

8.3.1 For a "thin" workpiece, as defined in 4.1.3, obtain an initial reading from each gage before starting the drilling operation.

8.3.2 Start the cutter and slowly advance it until it cuts through the entire thickness of the workpiece. If using the orbiting technique, also orbit the cutter. Stop and retract the cutter. Then measure one set of strain readings ε_1, ε_2 and ε_3.

8.3.3 Measure the hole diameter and confirm that it lies within the target range specified in Table 2.

8.3.4 Check the hole concentricity and confirm that it lies within the tolerance specified in 8.2.1.

8.3.5 Compute uniform residual stresses as described in 9.2.

8.4 *Drilling Procedure for a "Thick" or "Intermediate" Workpiece with Uniform Stresses:*

8.4.1 For a "thick" or "intermediate" workpiece, as defined in 4.1.4, obtain an initial reading from each gage before starting the drilling operation. Start the cutter and slowly advance it until it cuts through the rosette backing material and lightly scratches the workpiece surface. This point corresponds to "zero" cutter depth.

NOTE 5—Some practitioners use a technique that identifies the "zero" point by the completion of an electrical connection between the cutter and the workpiece.

iTeh Standards (https://standards.iteh.ai) Document Preview

TABLE 2 Workpiece Thicknesses, Hole Diameters and Depth Steps[A]

Rosette Type	D	Max. thickness of a "Thin" workpiece	Min. thickness of a "Thick" workpiece	Uniform Stresses			Non-Uniform Stresses		
				Min. hole diameter	Max. hole diameter	Practical depth step	Min. hole diameter	Max. hole diameter	Practical depth step
				Type A					
Conceptual	D	0.25 D	0.6 D	0.6 Max D_0	Max D_0	0.02 D	Min D_0	Max D_0	0.01 D
1/32 in. nominal	0.101 (2.57)	0.025 (0.64)	0.061 (1.54)	0.024 (0.61)	0.040 (1.01)	0.002 (0.05)	0.038 (0.96)	0.042 (1.07)	0.001 (0.025)
1/16 in. nominal	0.202 (5.13)	0.050 (1.28)	0.121 (3.08)	0.060 (1.52)	0.100 (2.54)	0.004 (0.10)	0.076 (1.93)	0.084 (2.13)	0.002 (0.05)
1/8 in. nominal	0.404 (10.26)	0.101 (2.56)	0.242 (6.16)	0.132 (3.35)	0.220 (5.59)	0.008 (0.20)	0.152 (3.86)	0.168 (4.27)	0.004 (0.10)
				Type B					
Conceptual	D	0.25 D	0.6 D	0.6 Max D_0	Max D_0	0.02 D	Min D_0	Max D_0	0.01D
1/16 in. nominal	0.202 (5.13)	0.050 (1.25)	0.121 (3.08)	0.060 (1.52)	0.100 (2.54)	0.004 (0.10)	0.076 (1.93)	0.084 (2.13)	0.002 (0.05)
				Type C					
Conceptual	D	0.60 D	1.30D	0.6 Max D_0	Max D_0	0.024 D	Min D_0	Max D_0	0.012 D
1/16 in. nominal	0.170 (4.32)	0.102 (2.59)	0.221 (5.62)	0.060 (1.52)	0.100 (2.54)	0.004 (0.10)	0.076 (1.93)	0.084 (2.13)	0.002 (0.05)

[A] Dimensions are in inches (mm).

8.4.2 Stop the cutter after reaching the "zero" point and confirm that all strain gage readings have not significantly changed. Use the new readings as the zero points for the subsequent strain measurements.

8.4.3 Start the cutter and advance it slowly by the Practical Depth Step listed in Table 2. If using the orbiting technique, also orbit the cutter. Stop the cutter and record the readings from each strain gage, ε_1, ε_2 and ε_3. Other depth increments of approximately similar size are also acceptable.

8.4.4 Repeat the stepwise advance in hole depth followed by strain measurements in approximately similar hole depth steps until a final hole depth is reached approximately equal to 0.2D for a type A or B rosette, or 0.24D for a type C rosette.

NOTE 6—The final hole depth is set at 0.2D or 0.24D because this limits the damage done to the workpiece by leaving intact some material support below the hole to provide local reinforcement. This support reduces local stress concentration effects and allows residual stress measurements to be made to stresses up to 80 % of the material yield stress. Up to about 20 % larger strains could be measured using deeper holes, but this practice is not specified here because it increases workpiece damage and stress concentration effects.

8.4.5 Measure the hole diameter and confirm that it lies within the target range specified in Table 2.

8.4.6 Check the hole concentricity and confirm that it lies within the tolerance specified in 8.2.1.

8.4.7 Compute uniform residual stresses as described in 9.3.

8.5 *Drilling Procedure for Workpieces with Non-Uniform Stresses:*

8.5.1 Obtain zero readings from each gage before starting the drilling operation. Start the cutter and carefully advance it until it cuts through the rosette backing material and lightly scratches the workpiece surface. This point corresponds to "zero" cutter depth (see Note 5).

8.5.2 Stop the cutter after reaching the "zero" point and confirm that all strain gage readings have not significantly changed. Use the new readings as the zero points for the subsequent strain measurements.

8.5.3 Start the cutter and advance it slowly by the Practical Depth Step listed in Table 2. Stop the cutter and record the readings from each strain gage.

8.5.4 When working with a Type A or B Rosette, repeat the stepwise advance in hole depth followed by strain measurements in a sequence of equal Practical Depth Steps until a final hole depth is reached, approximately equal to the minimum of 0.2D or 0.6W.

8.5.5 When working with a Type C Rosette, repeat the stepwise advance in hole depth followed by strain measurements in a sequence of equal Practical Depth Steps until a final hole depth is reached approximately equal to the minimum of 0.24D or 0.05W.

8.5.6 In circumstances where it may be desirable to concentrate hole depth steps within a particular depth range, it is permissible to use unequal hole depth steps. In this case, the total number of steps used should be in the range of 75 %-200 % of the number of steps that would be made if using equal Practical Depth Steps, as listed in Table 2. No step should be larger than three times the listed Practical Depth Step.

8.5.7 On completion of hole drilling, measure the hole diameter and confirm that it lies within the target range specified in Table 2.

8.5.8 Check the hole concentricity and confirm that it lies within the tolerance specified in 8.2.1.

8.5.9 Compute non-uniform residual stresses as described in Section 10.

9. Computation of Uniform Stresses

9.1 *Assumption of Uniform Stress:*

9.1.1 A "uniform stress" calculation is appropriate when prior information is available, for example, based on workpiece