SLOVENSKI STANDARD
SIST ETS 300 324-3:1997

01-november-1997

Signalizacijski protokoli in komutacija (SPS) - Vmesniki "V" pri digitalnih krajevnih centralah (LE) - Vmesnik V5.1 za podporo dostopovnega omrežja (AN) - 3. del: Zgradba preskušalnega niza in namen preskušanja (TSS&TP) za omrežno plast na strani dostopovnega omrežja (AN)

Signalling Protocols and Switching (SPS) - V interfaces at the digital Local Exchange (LE); V5.1 interface for the support of Access Network (AN); Part 3: Test Suite Structure and Test Purposes (TSS&TP) specification for the network layer (AN side)

iTeh STANDARD PREVIEW
(standards.iteh.ai)
SIST ETS 300 324-3:1997
https://standards.iteh.ai/catalog/standards/sist/1a751cbf-e04b-47ce-b51b-3fdaf5ccb656/sist-ets-300-324-3-1997

Ta slovenski standard je istoveten z: **ETS 300 324-3 Edition 1**

ICS:

33.040.30	Komutacijski in signalizacijski sistem	Switching and signalling systems
35.100.30	Omrežni sloj	Network layer

SIST ETS 300 324-3:1997 **en**

2003-01.Slovenski inštitut za standardizacijo. Razmnoževanje celote ali delov tega standarda ni dovoljeno.

SIST ETS 300 324-3:1997

iTeh STANDARD PREVIEW
(standards.iteh.ai)

SIST ETS 300 324-3:1997
https://standards.iteh.ai/catalog/standards/sist/1a751cbf-e04b-47ce-b51b-3fdaf5ccb656/sist-ets-300-324-3-1997

SIST ETS 300 324-3:1997

EUROPEAN TELECOMMUNICATION STANDARD

ETS 300 324-3

October 1995

Source: ETSI TC-SPS

Reference: DE/SPS-03003.3-1

ICS: 33.020, 33.080, 35.100.30

Key words: V interface, V5 interface, PSTN, ISDN, AN, TSS&TP, testing, layer 3

Signalling Protocols and Switching (SPS); V interfaces at the digital Local Exchange (LE); V5.1 interface for the support of Access Network (AN); Part 3: Test Suite Structure and Test Purposes (TSS&TP) specification for the network layer (AN side)

iTeh STANDARD PREVIEW
(standards.iteh.ai)
SIST ETS 300 324-3:1997
https://standards.iteh.ai/catalog/standards/sist/2a051cbe-ea4b-47ba-b8bb-3fdaf5ccb656/sist-ets-300-324-3-1997

ETSI

European Telecommunications Standards Institute

ETSI Secretariat

Postal address: F-06921 Sophia Antipolis CEDEX - FRANCE
Office address: 650 Route des Lucioles - Sophia Antipolis - Valbonne - FRANCE
X.400: c=fr, a=atlas, p=etsi, s=secretariat - **Internet:** secretariat@etsi.fr

Tel.: +33 92 94 42 00 - Fax: +33 93 65 47 16

Copyright Notification: No part may be reproduced except as authorized by written permission. The copyright and the foregoing restriction extend to reproduction in all media.

© European Telecommunications Standards Institute 1995. All rights reserved.

New presentation - see History box

SIST ETS 300 324-3:1997

iTeh STANDARD PREVIEW
(standards.iteh.ai)

SIST ETS 300 324-3:1997
https://standards.iteh.ai/catalog/standards/sist/1a751cbf-e04b-47ce-b51b-3fdaf5ccb656/sist-ets-300-324-3-1997

Whilst every care has been taken in the preparation and publication of this document, errors in content, typographical or otherwise, may occur. If you have comments concerning its accuracy, please write to "ETSI Editing and Committee Support Dept." at the address shown on the title page.

SIST ETS 300 324-3:1997

Contents

Foreword 7

1 Scope 9

2 Normative references 9

3 Definitions and abbreviations 10
3.1 Definitions 10
3.2 Abbreviations 11

4 Test Suite Structure (TSS) 12
4.1 TSS overview 12
4.2 Test groups 13
4.2.1 Protocol groups 13
4.2.1.1 Control protocol 13
4.2.1.2 PSTN protocol 14
4.2.2 Main test groups 14
4.2.2.1 Basic Interconnection (IT) tests 14
4.2.2.2 Capability (CA) tests 14
4.2.2.3 Valid Behaviour (BV) tests 14
4.2.2.4 Inopportune Behaviour (BO) tests 14
4.2.2.5 Invalid Behaviour (BI) tests 14
4.2.2.6 Timer (TI) expiry and counter mismatch tests 14
4.2.2.6.1 Timer expiry and counters of the Control protocol 15
4.2.2.6.2 Timer expiry and counters of the PSTN protocol 15
4.2.2.6.3 Timer expiry and counters of the AN system management 15
4.3 Test step structure 15
4.3.1 State transitions 15
4.3.1.1 Startup of V5.1 interface 16
4.3.1.2 Common control protocol (system management) 17
4.3.1.3 Control protocol (PSTN port FSM) 17
4.3.1.4 Control protocol (ISDN-BA port FSM) 17
4.3.1.5 PSTN protocol 17
4.3.2 Preconditions 18
4.3.3 Preambles 18
4.3.4 Postambles 18
4.3.5 Status verification 18
4.3.5.1 PSTN protocol 18
4.3.5.2 Port control protocol 19
4.3.5.3 Common control protocol 19
4.3.6 Common test steps 19
4.4 Defaults 19
4.5 Abstract Service Primitives (ASPs) and Protocol Data Units (PDUs) 19
4.5.1 ASPs 19
4.5.2 PDUs 19
4.5.2.1 Common control protocol 19
4.5.2.2 Port control protocol 19
4.5.2.3 PSTN protocol 19
4.5.3 Information elements 20
4.5.3.1 Variable length information elements 20
4.5.3.1.1 Control protocol 20
4.5.3.1.2 PSTN protocol 20
4.5.3.2 Single octet information elements 20
4.5.3.2.1 Control protocol 20

iTeh STANDARD PREVIEW
(standards.iteh.ai)
SIST ETS 300 324-3:1997
https://standards.iteh.ai/catalog/standards/sist/1a751cbf-e4db-476e-b51b-3fdaf5ccb656/sist-ets-300-324-3-1997

SIST ETS 300 324-3:1997

4.5.3.2.2 PSTN protocol 20
4.6 Timers and counters of the Abstract Test Suite (ATS) 20

5 Test Purposes (TPs) 22
5.1 Introduction 22
5.1.1 TP naming convention 22
5.1.2 Source of TP definition 23
5.1.3 Test strategy 23
5.1.4 Requirements not covered by TPs 23
5.1.5 Initial state 24
5.1.6 Test and data configuration requirements 24
5.2 Control protocol 24
5.2.1 Basic interconnection tests (V5NWKAN/CTRL/IT) 24
5.2.2 Capability tests (V5NWKAN/CTRL/CA) 24
5.2.3 Valid behaviour tests (V5NWKAN/CTRL/BV) 24
5.2.3.1 V5NWKAN/CTRL/BV/COM 24
5.2.3.1.1 V5NWKAN/CTRL/BV/COM/TRANS 24
5.2.3.1.2 V5NWKAN/CTRL/BV/COM/REST 25
5.2.3.1.3 V5NWKAN/CTRL/BV/COM/REVY 25
5.2.3.2 V5NWKAN/CTRL/BV/PORT 27
5.2.3.2.1 V5NWKAN/CTRL/BV/PORT/TRANS 27
5.2.3.2.2 V5NWKAN/CTRL/BV/PORT/PSTN 27
5.2.3.2.3 V5NWKAN/CTRL/BV/PORT/ISDNBA 29
5.2.4 Inopportune behaviour tests (V5NWKAN/CTRL/BO) 32
5.2.4.1 V5NWKAN/CTRL/BO/COM 32
5.2.4.1.1 V5NWKAN/CTRL/BO/COM/TRANS 32
5.2.4.1.2 V5NWKAN/CTRL/BO/COM/REVY 32
5.2.4.2 V5NWKAN/CTRL/BO/PORT 33
5.2.4.2.1 V5NWKAN/CTRL/BO/PORT/TRANS 33
5.2.4.2.2 V5NWKAN/CTRL/BO/PORT/PSTN 33
5.2.4.2.3 V5NWKAN/CTRL/BO/PORT/ISDNBA 33
5.2.5 Invalid behaviour tests (V5NWKAN/CTRL/BI) 34
5.2.5.1 V5NWKAN/CTRL/BI/COM 34
5.2.5.1.1 V5NWKAN/CTRL/BI/COM/TRANS 34
5.2.5.2 V5NWKAN/CTRL/BI/PORT 35
5.2.5.2.1 V5NWKAN/CTRL/BI/PORT/TRANS 35
5.2.6 Timer expiry and counter mismatch tests (V5NWKAN/CTRL/TI) 36
5.2.6.1 V5NWKAN/CTRL/TI/COM 36
5.2.6.1.1 V5NWKAN/CTRL/TI/COM/TRANS 36
5.2.6.2 V5NWKAN/CTRL/TI/PORT 36
5.2.6.2.1 V5NWKAN/CTRL/TI/PORT/TRANS 36
5.3 PSTN protocol 37
5.3.1 Basic interconnection tests (V5NWKAN/PSTN/IT) 37
5.3.2 Capability tests (V5NWKAN/PSTN/CA) 37
5.3.3 Valid behaviour tests (V5NWKAN/PSTN/BV) 37
5.3.3.1 V5NWKAN/PSTN/BV/0 38
5.3.3.2 V5NWKAN/PSTN/BV/1 38
5.3.3.3 V5NWKAN/PSTN/BV/2 39
5.3.3.4 V5NWKAN/PSTN/BV/3 40
5.3.3.5 V5NWKAN/PSTN/BV/4 41
5.3.3.6 V5NWKAN/PSTN/BV/5 42
5.3.3.7 V5NWKAN/PSTN/BV/6 43
5.3.3.8 V5NWKAN/PSTN/BV/7 44
5.3.4 Inopportune behaviour tests (V5NWKAN/PSTN/BO) 45
5.3.4.1 V5NWKAN/PSTN/BO/0 45
5.3.4.2 V5NWKAN/PSTN/BO/1 46
5.3.4.3 V5NWKAN/PSTN/BO/2 46
5.3.4.4 V5NWKAN/PSTN/BO/3 47
5.3.4.5 V5NWKAN/PSTN/BO/4 47
5.3.4.6 V5NWKAN/PSTN/BO/5 48
5.3.4.7 V5NWKAN/PSTN/BO/6 48
5.3.4.8 V5NWKAN/PSTN/BO/7 49
5.3.5 Invalid behaviour tests (V5NWKAN/PSTN/BI) 49

iTeh STANDARD PREVIEW
(standards.iteh.ai)
SIST ETS 300 324-3:1997
https://standards.iteh.ai/catalog/standards/sist/1a751cbf-e04b-47ce-b31b-3fdaf5ccb656/sist-ets-300-324-3-1997

SIST ETS 300 324-3:1997

5.3.5.1 V5NWKAN/PSTN/BI/1 49
5.3.5.2 V5NWKAN/PSTN/BI/5 51
5.3.6 Timer expiry and counter mismatch tests (V5NWKAN/PSTN/TI) 52
5.3.6.1 V5NWKAN/PSTN/TI/2 52
5.3.6.2 V5NWKAN/PSTN/TI/3 52
5.3.6.3 V5NWKAN/PSTN/TI/4 52
5.3.6.4 V5NWKAN/PSTN/TI/5 52
5.3.6.5 V5NWKAN/PSTN/TI/7 53

Annex A (informative): Bibliography 54

History 55

iTeh STANDARD PREVIEW
(standards.iteh.ai)
SIST ETS 300 324-3:1997
https://standards.iteh.ai/catalog/standards/sist/1a751cbf-e04b-47ce-b51b-3fdaf5ccb656/sist-ets-300-324-3-1997

SIST ETS 300 324-3:1997

Blank page

iTeh STANDARD PREVIEW
(standards.iteh.ai)
SIST ETS 300 324-3:1997
https://standards.iteh.ai/catalog/standards/sist/1a751cbf-e04b-47ce-b51b-3fdaf5ccb656/sist-ets-300-324-3-1997

SIST ETS 300 324-3:1997

Foreword

This European Telecommunication Standard (ETS) has been produced by the Signalling Protocols and Switching (SPS) Technical Committee of the European Telecommunications Standards Institute (ETSI).

This ETS is part 3 of a multi-part standard covering the V5.1 interface as described below:

Part 1: "V5.1 interface specification";

Part 2: "Protocol Implementation Conformance Statement (PICS) proforma";

Part 3: "Test Suite Structure and Test Purposes (TSS&TP) specification for the network layer (AN side)";

Part 4: "Abstract Test Suite (ATS) and partial Protocol Implementation eXtra Information for Testing (PIXIT) proforma specification for the network layer (AN side)";

Part 5: "TSS&TP specification for the network layer (LE side)";

Part 6: "ATS and partial PIXIT proforma specification for the network layer (LE side)";

Part 7: "TSS&TP specification for the data link layer";

Part 8: "ATS and partial PIXIT proforma specification for the data link layer";

Part 9: "Test specification for the physical layer".

iTeh STANDARD PREVIEW
(standards.iteh.ai)

Transposition dates	
Date of adoption of this ETS:	27 October 1995
Date of latest announcement of this ETS (doa):	31 January 1996
Date of latest publication of new National Standard or endorsement of this ETS (dop/e):	31 July 1996
Date of withdrawal of any conflicting National Standard (dow):	31 July 1996

SIST ETS 300 324-3:1997
https://standards.iteh.ai/catalog/standards/sist/1a751cbf-e04b-47ce-b51b-5fdab3ccb056/sist-ets-300-324-3-1997

SIST ETS 300 324-3:1997

Blank page

iTeh STANDARD PREVIEW
(standards.iteh.ai)
SIST ETS 300 324-3:1997
https://standards.iteh.ai/catalog/standards/sist/1a751cbf-e04b-47ce-b51b-3fdaf5ccb656/sist-ets-300-324-3-1997

SIST ETS 300 324-3:1997

1 Scope

This third part of ETS 300 324 contains the Test Suite Structure (TSS) and Test Purposes (TPs) for the Network layer (NWK) and parts of the system management of the Access Network (AN) side of a V5.1 interface.

The objective of this ETS is to provide conformance tests giving a high probability of inter-operability of an AN and a Local Exchange (LE) from different manufacturers over the V5.1 interface. This ETS covers only the procedures described in ETS 300 324-1 [1].

ISO/IEC 9646-1 [5] is used as the basis for the methodology of conformance testing.

Concerning the Public Switched Telephone Network (PSTN) protocol testing, only the procedures defined in ETS 300 324-1 [1] are covered by the tests defined in this ETS. An Implementation Under Test (IUT), however, will have implemented a national PSTN protocol part as well. This requires that the tester generates messages containing the national PSTN protocol specific optional Information Elements (IEs), otherwise the IUT would not act on messages according to the PSTN protocol procedure definition. However, this does not provide a comprehensive test of the national PSTN protocol mapping specification, which is outside the scope of this ETS.

As the tests use PSTN messages containing optional IEs according to national specifications, the test result is only valid for the implemented national mapping of the V5.1 PSTN protocol.

This ETS does not cover tests related to functions of the bearer channel. Those functions should be tested in conjunction with testing of the national PSTN protocol mapping specification.

This ETS contains no requirements concerning NWK tests for Integrated Services Digital Network Basic Access (ISDN-BA).

iTeh STANDARD PREVIEW

Annex A lists the bibliography.

(standards.iteh.ai)

2 Normative references

SIST ETS 300 324-3:1997
https://standards.iteh.ai/catalog/standards/sist/1a751cbf-e04b-47ce-b51b-9fdaf5ccb636/sist-ets-300-324-3-1997

This ETS incorporates by dated or undated reference, provisions from other publications. These normative references are cited at the appropriate places in the text and the publications are listed hereafter. For dated references, subsequent amendments to or revisions of any of these publications apply to this ETS only when incorporated in it by amendment or revision. For undated references the latest edition of the publication referred to applies.

[1] ETS 300 324-1 (1994) including amendment A1: "Signalling Protocols and Switching (SPS), V interfaces at the digital Local Exchange (LE); V5.1 interface for the support of Access Network (AN); Part 1: V5.1 interface specification".

[2] ETS 300 324-2 (1994): "Signalling Protocols and Switching (SPS), V interfaces at the digital Local Exchange (LE); V5.1 interface for the support of Access Network (AN); Part 2: Protocol Implementation Conformance Statement (PICS) proforma".

[3] ETS 300 297: "Integrated Services Digital Network (ISDN); Access Digital Section for ISDN basic rate".

[4] ISO 7498: "Information Processing Systems - Open Systems Interconnection - Basic Reference Model".

[5] ISO/IEC 9646-1: "Information technology - Open Systems Interconnection - Conformance testing methodology and framework - Part 1: General concepts".

SIST ETS 300 324-3:1997

3 Definitions and abbreviations

3.1 Definitions

For the purposes of this ETS, the following definitions apply, together with those given in ETS 300 324-1 [1]:

Abstract Test Case (ATC): Refer to ISO/IEC 9646-1 [5].

Abstract Test Suite (ATS): Refer to ISO/IEC 9646-1 [5].

current provisioning variant: Identifier for the presently active data set.

data link layer: Refer to ISO 7498 [4].

Implementation Under Test (IUT): Refer to ISO/IEC 9646-1 [5].

incorrect IE: Specified IE carrying IE types not defined in ETS 300 324-1 [1].

invalid IE: PSTN IE not according to national specific requirements.

invalid Protocol Data Unit (PDU): PDU which contains incorrect message format.

invalid PSTN message: PSTN message carrying IEs not according to national specific requirements.

Lower Tester (LT): Refer to ISO/IEC 9646-1 [5].

iTeh STANDARD PREVIEW
(standards.iteh.ai)

Network Layer (NWK): Refer to ISO 7498 [4].

Network Termination (NT): An equipment providing the network side at the ISDN user-network interface for the basic access.

SIST ETS 300 324-3:1997
https://standards.iteh.ai/catalog/standards/sist/1a751cbf-e04b-47ce-b51b-31da15ccb636/sist-ets-300-324-3-1997

NOTE: This term is used in this ETS to indicate network-terminating aspects of NT1 and NT2.

new provisioning variant: Identifier for the data set which was announced to the IUT to become the next active data set through reprovisioning.

physical layer: Refer to ISO 7498 [4].

Protocol Implementation Conformance Statement (PICS): Refer to ISO/IEC 9646-1 [5].

PICS proforma: Refer to ISO/IEC 9646-1 [5].

specified IE: IE identifier defined in ETS 300 324-1 [1].

System Under Test (SUT): Refer to ISO/IEC 9646-1 [5].

Test Purpose (TP): Refer to ISO/IEC 9646-1 [5].

unknown provisioning variant: Identifier for a non-available data set.

unspecified IE: IE identifier not defined in ETS 300 324-1 [1].

valid IE: PSTN IE according to national specific requirements.

valid PSTN message: PSTN message carrying IEs according to national specific requirements.

SIST ETS 300 324-3:1997

3.2 Abbreviations

For the purposes of this ETS, the following abbreviations apply:

AN	Access Network
ASP	Abstract Service Primitive
ATC	Abstract Test Case
ATS	Abstract Test Suite
BI	Invalid Behaviour
BO	Inopportune Behaviour
BV	Valid Behaviour
CA	Capability
COM	Common control protocol
CTRL	Control
DSAP	Data link Service Access Point
FE	Function Element
FSM	Finite State Machine
ID	Identifier
IE	Information Element
ISDN	Integrated Services Digital Network
ISDN-BA	ISDN Basic Access
IT	Basic Interconnection
IUT	Implementation Under Test
L3addr	Layer 3 address
LE	Local Exchange
LT	Lower Tester
MDU	Management Data Unit
MPH	Management Physical Layer
NT	Network Termination
NWK	Network layer
PDU	Protocol Data Unit
PICS	Protocol Implementation Conformance Statements
PL	Permanent Line
PSTN	Public Switched Telephone Network
REST	Restart
REVY	Verify and Reprovisioning
SUT	System Under Test
TE	Terminal Equipment (ISDN or PSTN)
TI	Timer
TP	Test Purpose
TSS	Test Suite Structure
UNI	User Network Interface

iTeh STANDARD PREVIEW
(standards.iteh.ai)
SIST ETS 300 324-3:1997
https://standards.iteh.ai/catalog/standards/sist/1a791c6f-e04b-47ce-b51b-5fdaf5ccb656/sist-ets-300-324-3-1997

SIST ETS 300 324-3:1997

4 Test Suite Structure (TSS)

4.1 TSS overview

Figure 1 shows the structure of the V5.1 AN side NWK test suite.

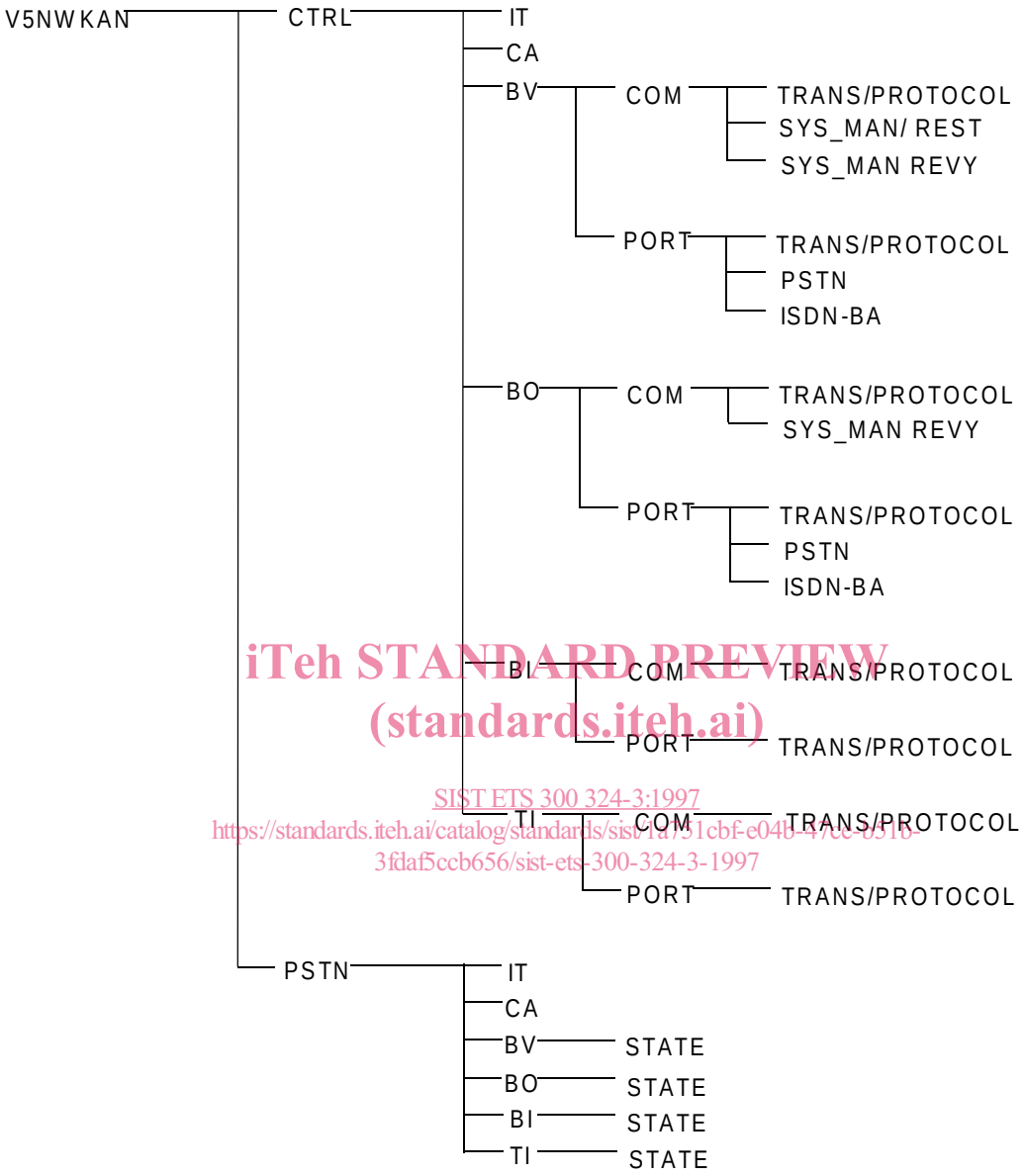

iTeh STANDARD PREVIEW
(standards.iteh.ai)
SIST ETS 300 324-3:1997
https://standards.iteh.ai/catalog/standards/sist/1a751cbf-e048-47ce-b518-3fdaf5ccb656/sist-ets-300-324-3-1997

Figure 1: NWK AN TSS

SIST ETS 300 324-3:1997

4.2 Test groups

Figure 2 gives an overview of the various protocol entities of a V5.1 interface. Table 1 maps each protocol entity on tested protocol groups.

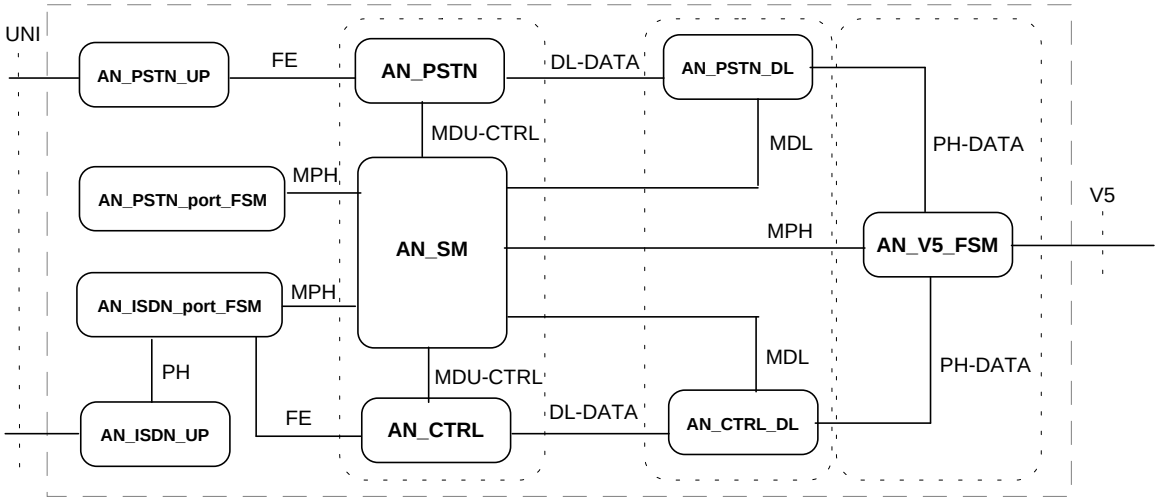

Figure 2: Network Layer AN - protocol entity overview

Table 1: Names used in figure 2 that correspond to ETS 300 324-1 [1]

NWK protocol entities	Protocol entities defined in ETS 300 324-1 [1]	Protocol group reference
AN_PSTN_UP	AN_PSTN_user_port	4.2.1.1
AN_PSTN_port_FSM	AN_PSTN_user_port_FSM	4.2.1.1
AN_ISDN_port_FSM	AN_ISDN_BA_user_port_FSM	4.2.1.1
AN_ISDN_UP	AN_ISDN_BA_user_port AN_ISDN_PRA_user_port	4.2.1.1
AN_CTRL	AN_control_protocol	4.2.1.1
AN_SYS	AN_system_management	4.2.1.1
AN_PSTN	AN_PSTN_protocol	4.2.1.2

iTeh STANDARD PREVIEW
(standards.iteh.ai)
SIST ETS 300 324-3:1997
https://standards.iteh.ai/catalog/standards/sist/...-e04b-47ce-b51b-...-3-1997

4.2.1 Protocol groups

4.2.1.1 Control protocol

All tests in the Control protocol (V5NWKAN/CTRL) test group are intended to verify as thoroughly as possible the various procedures of the AN_control_protocol entity. Depending on provisioning the following configurations are covered:

AN_system_management: the startup, restart, re-provisioning and verification procedures of normal operation of the AN_system_management (V5NWKAN/CTRL/BV/COM/REST, V5NWKAN/CTRL/BV/COM/REVY) and V5NWKAN/CTRL/BO/COM/REVY) are tested.

AN_control_protocol: the normal and exceptional procedures of the AN_control_protocol are verified in the test groups V5NWKAN/CTRL/BV/COM/TRANS, V5NWKAN/CTRL/BO/COM/TRANS, V5NWKAN/CTRL/TI/COM/TRANS, V5NWKAN/CTRL/BV/PORT/TRANS, V5NWKAN/CTRL/BO/PORT/TRANS and V5NWKAN/CTRL/TI/PORT/TRANS. Contents of the AN_control_protocol values are not verified (e.g. the control function ID). The error handling procedures are verified in test groups V5NWKAN/CTRL/BI/COM/TRANS and V5NWKAN/CTRL/BI/PORT/TRANS.