Designation: ~~F3340 – 18~~ F3340 – 22

Standard Test Method for Thermal Resistance of Camping Mattresses Using a Guarded Hot Plate Apparatus[1]

This standard is issued under the fixed designation F3340; the number immediately following the designation indicates the year of original adoption or, in the case of revision, the year of last revision. A number in parentheses indicates the year of last reapproval. A superscript epsilon (ε) indicates an editorial change since the last revision or reapproval.

1. Scope

1.1 This test method covers the measurement of the thermal resistance of camping mattresses in conditions of steady-state heat transfer, using a two-plate apparatus. The camping mattress is held under constant compressive force between a guarded hot plate and a cold plate. The primary heat transfer for this method is one dimensional, vertically through the camping mattress thickness. As such this measured thermal insulation value is a repeatable comparative measurement. However, it ~~should~~ needs to be noted that this value ~~may~~will not always correlate to actual insulation performance as it is feasible that real-world heat transfer ~~may~~will differ slightly because of additional heat losses possibly involved (for example, edge heat loss, uncovered surface heat loss, compression rate changes or posture changes during sleep).

1.2 This test method is applicable to all types of camping mattresses (for example, inflating air mattress with or without insulation, inflating air mattress with reflective materials, self-inflating open cell foam mattress with or without coring, closed cell non-inflatable foam mats). Auxiliary insulation of any type shall be excluded in the measurement. Auxiliary insulations are any type of material removable from the mattress (for example, sleeping bags, mattress covers).

1.3 The sample thickness shall not exceed the limit determined by the hot plate dimensions stated in 7.1.2.

1.4 *Units*—The values stated in SI units are to be regarded as the standard. No other units of measurement are included in this standard.

1.5 *This standard does not purport to address all of the safety concerns, if any, associated with its use. It is the responsibility of the user of this standard to establish appropriate safety, health, and environmental practices and determine the applicability of regulatory limitations prior to use.*

1.6 *This international standard was developed in accordance with internationally recognized principles on standardization established in the Decision on Principles for the Development of International Standards, Guides and Recommendations issued by the World Trade Organization Technical Barriers to Trade (TBT) Committee.*

2. Referenced Documents

2.1 *ASTM Standards:*[2]

C168 Terminology Relating to Thermal Insulation

[1] This test method is under the jurisdiction of ASTM Committee F08 on Sports Equipment, Playing Surfaces, and Facilities and is the direct responsibility of Subcommittee F08.22 on Camping Softgoods.

Current edition approved ~~Oct. 1, 2018~~June 15, 2022. Published ~~November 2018~~July 2022. Originally approved in 2018. Last previous edition approved in 2018 as F3340 – 18. DOI: ~~10.1520/F3340-18.~~10.1520/F3340-22.

[2] For referenced ASTM standards, visit the ASTM website, www.astm.org, or contact ASTM Customer Service at service@astm.org. For *Annual Book of ASTM Standards* volume information, refer to the standard's Document Summary page on the ASTM website.

C177 Test Method for Steady-State Heat Flux Measurements and Thermal Transmission Properties by Means of the Guarded-Hot-Plate Apparatus
D1518 Test Method for Thermal Resistance of Batting Systems Using a Hot Plate
E177 Practice for Use of the Terms Precision and Bias in ASTM Test Methods
E691 Practice for Conducting an Interlaboratory Study to Determine the Precision of a Test Method
2.2 *ISO Standard:*[3]
ISO 8302 Thermal insulation — Determination of steady-state thermal resistance and related properties — Guarded hot plate apparatus

3. Terminology

3.1 *Definitions*—For definitions of terms used in this test method, refer to Terminology C168 and 3.2.

3.2 *Definitions of Terms Specific to This Standard:*

3.2.1 *ambient air speed, n*—the air speed of environment immediately surrounding the specimen and apparatus.

3.2.2 *ambient temperature, n*—the air temperature of environment immediately surrounding the specimen and apparatus.

3.2.3 *cold plate, n*—isothermal boundary created by a rigid cooling plate that contacts one side of the specimen and is parallel to the hot plate.

3.2.4 *guarded hot plate, n*—constant temperature heat source that consists of a central metering plate and primary guards surrounding the sides and backside of the metering plate.

3.2.5 *guards (thermal guards), n*—means to prevent lateral edge heat loss and promote one-dimensional heat flow in the vertical direction through the test sample.

3.2.5.1 *Discussion*—
The guards consist of a thermal guard ring surrounding the metering plate and a backplate (counter-heating plate) parallel to the metering plate. The guards are heated independently to maintain the same surface temperature as the metering plate surface temperature.

3.2.6 *homogeneous mattress, n*—a camping mattress with the same composition, average density, and distribution of materials and construction method throughout.

3.2.6.1 *Discussion*—
This includes mattresses constructed of a repeating pattern in which the length scale of the pattern is less than half of the width of the metering plate. If it is unclear whether the mattress meets these requirements, consider it a non-homogenous mattress for the purposes of testing.

3.2.7 *metering plate, n*—measurement region of the guarded hot plate that is controllable to a constant temperature and capable of measuring heat loss from its surface in the form of power.

3.2.8 *non-homogeneous mattress, n*—a camping mattress where the composition, average density of materials, and construction method vary from location to location.

3.2.9 *R-value, n*—thermal resistance of a material or a system in inch-pound units: F ft^2 h/Btu.

3.2.9.1 *Discussion*—
R-value is only used as a presentation of a converted final material's RSI-value. It shall not be used in any intermediate measurement data conversion or machine calibration.

3.2.10 *RSI-value, n*—thermal resistance of a material or a system in SI units: K m^2/W.

3.2.11 *two-plate guarded hot plate apparatus, n*—apparatus that measures the heat transmission through a specimen from the guarded hot plate to the cold plate.

[3] Available from International Organization for Standardization (ISO), ISO Central Secretariat, BIBC II, Chemin de Blandonnet 8, CP 401, 1214 Vernier, Geneva, Switzerland, http://www.iso.org.

4. Summary of Test Method

4.1 The specimen is compressed horizontally between a guarded upper hot plate and a lower cold plate. If inflatable, the specimen is inflated to a predetermined internal pressure. The hot plate and cold plate are maintained at fixed temperatures. The ambient temperature is controlled to be equal to the average temperature of the hot plate and cold plate. The heat flux through the specimen is measured during steady-state condition. The thermal resistance is calculated by dividing the temperature difference with the heat flux (see Eq 1).

5. Significance and Use

5.1 The thermal resistance of camping mattresses is an important indicator of insulation performance. This test method establishes criteria to measure this property consistently and in conditions relevant to the application. The measured value can be used for evaluating the thermal insulation performance of the camping mattresses, thus assisting with the product construction and design and providing guidance for consumers in comparing and selecting a mattress.

6. Interferences

6.1 ~~Departures~~ It is feasible that departures from the procedures and conditions of this test method ~~may~~will lead to significantly different test results. It is necessary to report any departures from the procedures and conditions of this test method with the results.

6.2 *Discussion*—Technical knowledge concerning the theory of heat transfer, temperature measurement and testing practices is important for controlling test variables. The causes of measurement uncertainty and variation (Annex A1) shall be understood so that any known errors are corrected or eliminated to the extent possible, and the system is accurately calibrated to ensure measurement accuracy and precision are satisfactory.

7. Apparatus

7.1 *Description*—The apparatus consists of a guarded hot plate, a cold plate, a compression system, a power source, temperature sensors, and a controller. Fig. 1 illustrates the general assembly of the apparatus. Subsections 7.2 to 7.5 describe requirements for each part of the apparatus. The apparatus shall meet the stated tolerance in Section 8 following procedures set forth in Annex A2.

7.1.1 The guarded hot plate and cold plate shall be designed and constructed using principles and construction which are well defined in Test Method C177, Test Method D1518, or ISO 8302. Existing guarded hot plate machines compliant to those standards, that also meet the requirements described in 7.2 and 7.3, can be successfully converted to the apparatus of this standard by adding a compression system.

7.1.2 Additional design consideration shall be given to the maximum specimen thickness limit. Maximum testable specimen thickness depends on plate construction and dimensions. As such, maximum testable thickness shall be stated on all test reports for a given test apparatus. If a test sample exceeds the maximum testable thickness, it shall be excluded for testing on that apparatus. Maximum thickness is determined by using the formula in Section 2.2.1 of ISO 8302 and a 0.5 % threshold of edge heat loss error (see Annex A4).

7.2 *Guarded Hot Plate:*

7.2.1 *Metering Plate*—The heater shall provide uniform temperature across the metering plate surface with a variation of less than 0.2°C when testing materials of R_{ct} greater than 0.1 K m^2/W. The surface of the metering plate shall have an emissivity of 0.9 (as measured at ambient temperature) or greater as to mimic the emissivity of human skin. The minimum dimension of the metering plate shall be 200 mm per side if square, or 200 mm in diameter if circular. The maximum heating capacity is designed to provide adequate heat flux and accuracy in the entire measurable range.

7.2.2 *Thermal Guard Ring*—The combined size of the thermal guard ring and metering plate shall be between 400 and 660 mm per side if square, or between 400 and 660 mm in diameter if circular, to accommodate most standard camping mattresses. The material and construction of the thermal guard ring shall be the same as that of the metering plate. The average temperature difference between the metering plate's surface and guard ring's surface shall not exceed 0.2°C. The surface of the guard ring shall have an emissivity of 0.9 (as measured at ambient temperature) or greater as to mimic the emissivity of human skin.

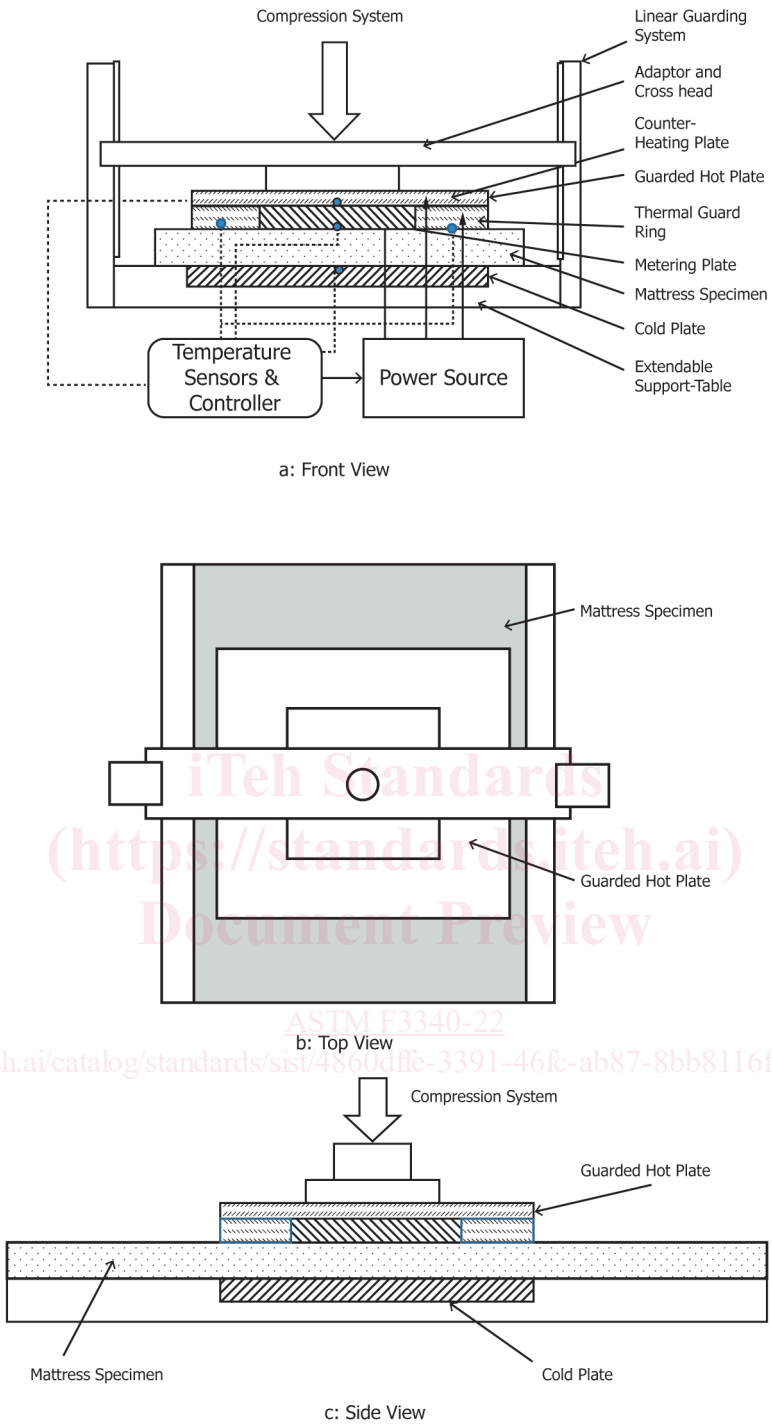

FIG. 1 Two-Plate Guarded Hot Plate Apparatus for Testing Camping Mattresses

7.2.3 *Counter-Heating Plate*—The counter-heating plate shall have a larger surface area than the metering plate region to effectively prevent from any backside heat loss. The average temperature difference between the surfaces of metering plate and lower guard shall not exceed 0.2°C.

7.3 *Cold Plate*—The cold plate has the same size as the combined size of the thermal guard ring and metering plate. ~~The~~ It is acceptable to achieve the cold plate temperature control ~~may be achieved~~ using any viable method, such as thermal electrical cooling and temperature-controlled circulating coolant fluids. The temperature difference across the cold plate's surface that is in the area equivalent and opposite the metering plate shall be less than 0.2°C when testing materials of R_{ct} greater than 0.1.

7.4 *Compression System:*

7.4.1 A means shall be provided for imposing a reproducible compression on the specimen. Compression can be achieved by any viable means, such as dead weight or constant-force springs.

7.4.2 The hot plate and cold plate working surfaces shall be parallel within 2 %.

7.5 *Supporting Frame*—To test a full-size camping mattress, supports shall be provided outside the measurement area to prevent the mattress from bending under its own weight. ~~Bending may decrease accuracy of results by distorting the specimen at or near the testable area. Supports shall be leveled with the~~ It is possible that bending will decrease the measurement accuracy due to sample distortion at the plate boundary. The support needs to level the bottom of the sample mattress to the upper surface of the cold plate ~~to keep the mattress flat.~~and separate from the cold plate at least 6 in. as long as the pad geometry allows this.

8. Calibration ~~and Standardization~~

8.1 The apparatus shall be calibrated annually with NIST standard reference materials specified in Annex A2. After following the procedure in Annex A2, the minimum and maximum tolerances of the measured value shall be between –3 and +1 % of the target standard value.

8.2 Calibration of the temperature sensors and heaters shall be performed regularly according to the manufacturer's instructions, and at any time the accuracy is found to be outside the tolerances.

9. Sampling and Specimen Preparation

9.1 *Sampling*—Test three identical specimens. Any departure shall be noted in the test report.

9.2 *Test Specimens:*

9.2.1 *Full-Size Specimen*—Full-size samples are mattresses in the size and shape as used by the end consumer. Full-size samples, identical to the final design and construction of production model, shall be used for any consumer-facing claims that cite this test method.

9.2.2 *Made-To-Fit Specimen*—Small-size samples made to fit the exterior bounds of the guarded hot plate or slightly larger can be used to provide comparative test results. Measurement results from such samples ~~should~~ need to be comparable, but not identical, to full-size samples of the same construction, Results from made-to-fit specimens cannot be used for consumer-facing claims that cite this test method.

9.3 *Specimen Pre-Inflating and Conditioning:*

9.3.1 *For Inflatable Mattresses,* fill the specimen to 3.7 kPa (0.2 kPa above the standard fill pressure to facilitate the fill pressure equalization) with a suitable pump (for example, a raft pump) in the test environmental conditions. Compressed air or mouth blowing are not recommended to avoid introducing moisture, particulates, and oils which are commonly found in compressed air systems.

NOTE 1—To promote even distribution of insulation, test specimens with loose filling shall be inflated and conditioned in the orientation in which they are to be tested.

9.3.2 Condition prefilled specimens in test environmental conditions.

9.3.2.1 Minimum ~~4~~6 h for inflating ~~mattresses after~~ mattresses.~~9.3.1.~~

9.3.2.2 Minimum 2 h for non-inflatable mattresses.

9.4 *Measurement Locations in a Specimen:*

9.4.1 *Rectangular Mattresses*—Mark three locational measurement lines ~~equally~~evenly spaced at 0.25 *L*, 0.5 *L* (central location), and 0.75 *L*, where *L* is the length of the mattress, see Fig. 2. If the specimen is shorter than double the length of the guarded hot plate, then the specimen shall be measured with the edge of the guarded hot plate aligned to the edge of the specimen at (1) the head-end and (2) the foot-end. The third measurement ~~should~~ needs to be taken at the center of the specimen.

9.4.2 *Tapered Mattress*—~~Mark three locational measurement lines as shown in Fig. 3.~~ A tapered mattress ~~will typically have head or foot ends that cannot completely cover~~ typically has narrower width in the head or leg section than the width of ~~the guarded hot plate at the locations defined~~ guarded hot plate. It is possible that measurement location L1 or L2 in 9.4.1~~. In this case, the effective length of the mattress (L') for R-value measurement purposes is the maximal length that can accommodate the full width of the guarded hot plate. The first measurement shall be as close as possible to the head-end of the specimen with the specimen still accommodating the full width of the guarded hot plate. The second measurement shall be similarly located toward the foot-end of the specimen. The third measurement will be performed with the guarded hot plate centered at~~ will need to be adjusted.~~L'/2 (see Fig. 3).~~

9.4.2.1 Locate the locations L1, L2 and L3 per 9.4.1 when inflated to 3.7 kPa.

9.4.2.2 Check if the full width of the guarded hot plate is covered at L1 and L2.

9.4.2.3 If the full width of the guarded hot plate is not covered at either location, calculate the minimum guard covering width using Eq A4.1 with acceptable measurement error of 0.5 %, specimen thickness and metering plate dimension.

9.4.2.4 If the calculated minimum guard covering width is achieved at L1 or L2, then no adjustment is required.

9.4.2.5 If the calculated minimum guard covering width is not achieved at L1 or L2, then move L1 or L2 towards central location until the minimum guard covering width is achieved.

9.4.2.6 L3 is centered between L1 and L2, see Fig. 3.

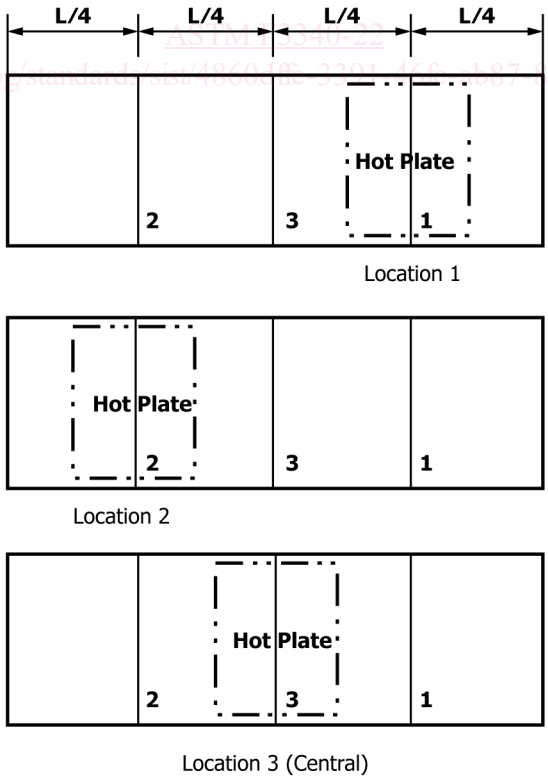

FIG. 2 Rectangular Mattress Measurement Locations

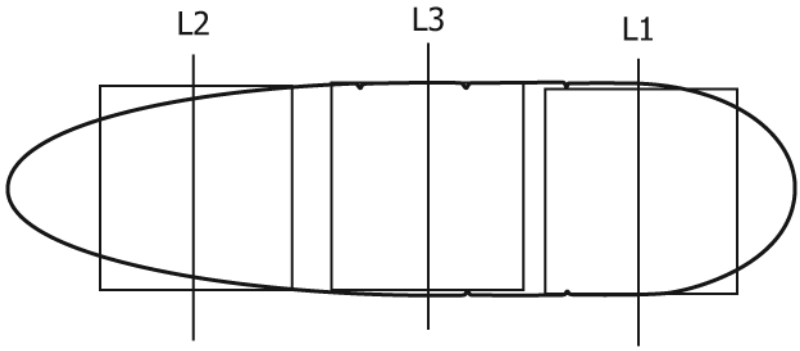

FIG. 3 Tapered Mattress Measurement Locations

9.4.3 *Area Specific Thermal Measurement*—In addition to standardized testing locations defined in 9.4.1 and 9.4.2, it is acceptable to measure Area Specific Thermal Resistance in location(s) specified by a customer. The specified location(s) shall be measured on each of the three specimens.

9.5 *Test ~~Numbers:~~ Options – Homogeneous versus Body Mapped Mattresses:*

9.5.1 *Option 1*—Test three independent specimens.

9.5.1.1 For full-size specimens, measure at three locations for each ~~specimen.~~ specimen per 9.4.1 or 9.4.2. This is the preferred option because it adds consistency and gives full statistics with results.

9.5.1.2 For made-to-fit specimens, ~~measure~~test three specimens, each in one location at the center of the specimen.

9.5.2 *Option 2*—Reduced test numbers.

9.5.2.1 For a known homogeneous mattress, take one measurement at the central location for each of three mattress specimens.

9.5.2.2 For a ~~non-homogenous mattress,~~ mattress with unknown homogeneity, test the first mattress specimen ~~must be tested~~ in three ~~defined locations.~~locations per 9.4.1 or 9.4.2. If the coefficient of variation of R_{ct} within three locational measurements is less than 5 %, ~~then the mattress may be considered~~it is then acceptable to consider the mattress as homogenous by conducting one test at the central location for the second and the third specimens. Otherwise, three locations shall be tested for all three specimens.

9.6 ~~A~~ It is acceptable to use a mattress narrower than the full width of guarded hot plate but still wider than the metering plate ~~may be used~~ for testing. ~~However, the~~ The maximum testable specimen thickness shall be calculated using Eq A4.1 with the actual ~~covered width of the guard ring by the mattress. Those~~guard covering width. Sample width and maximum testable specimen thickness must be noted in the report.

10. Test Conditions

10.1 *Temperature of the Hot Plate:* 35°C ± 0.1°C.

10.2 *Temperature of the Cold Plate:* 5°C ± 0.1°C.

10.3 *Specimen Inflation Pressure:* 3.5 ± 0.2 kPa.

10.4 *Specimen Compression Pressure:* 2.0 ± 0.1 kPa.

10.5 *Ambient Relative Humidity:* 20-70% ± 5 %.

10.6 *Ambient Temperature:* 20 ± 2°C, temperature deviation less than ± 0.5°C from mean during steady-state.