This international standard was developed in accordance with internationally recognized principles on standardization established in the Decision on Principles for the Development of International Standards, Guides and Recommendations issued by the World Trade Organization Technical Barriers to Trade (TBT) Committee.

Designation: D5344 – 22

Standard Test Method for Extension Force of Partially Oriented Yarn[1]

This standard is issued under the fixed designation D5344; the number immediately following the designation indicates the year of original adoption or, in the case of revision, the year of last revision. A number in parentheses indicates the year of last reapproval. A superscript epsilon (ε) indicates an editorial change since the last revision or reapproval.

1. Scope

1.1 This test method covers the measurement of extension force developed while drawing a partially oriented filament yarn between pairs of draw rolls of different surface speeds.

1.2 Extension force provides an estimate of the yarn orientation.

1.3 This test method applies to partially oriented filament yarns less than 33.3 tex (300 denier), but it can be used for higher deniers by applying the test conditions as directed in Appendix X1.

1.4 The values stated in SI units are to be regarded as standard. The values given in parentheses are provided for information only.

1.5 *This standard does not purport to address all of the safety concerns, if any, associated with its use. It is the responsibility of the user of this standard to establish appropriate safety, health, and environmental practices and determine the applicability of regulatory limitations prior to use.*

1.6 *This international standard was developed in accordance with internationally recognized principles on standardization established in the Decision on Principles for the Development of International Standards, Guides and Recommendations issued by the World Trade Organization Technical Barriers to Trade (TBT) Committee.*

2. Referenced Documents

2.1 *ASTM Standards:*[2]

D123 Terminology Relating to Textiles

D1776 Practice for Conditioning and Testing Textiles

D2258 Practice for Sampling Yarn for Testing

D2904 Practice for Interlaboratory Testing of a Textile Test Method that Produces Normally Distributed Data (Withdrawn 2008)[3]

D2906 Practice for Statements on Precision and Bias for Textiles (Withdrawn 2008)[3]

D4849 Terminology Related to Yarns and Fibers

3. Terminology

3.1 For terminology related to yarn test methods refer to Terminology D4849.

3.2 The following terms are relevant to this standard: drawing; draw ratio (DR); draw texturing; extension; extension force; partially oriented yarn.

3.3 For definitions of other textile terms used in this test method refer to Terminology D123.

4. Summary of Test Method

4.1 Partially oriented filament yarn withdrawn from a package is pretensioned, heated, and drawn on an instrument under conditions similar to those used in the draw-texturing process. A tension measuring head senses the force required to draw the running yarn a specified amount of its original length under given conditions.

5. Significance and Use

5.1 This test method is considered satisfactory for acceptance testing of commercial shipments because current estimates of between-laboratory precision are acceptable and the method is used extensively in the trade for acceptance testing.

5.1.1 If there are differences or practical significance between reported test results for two laboratories (or more), comparative tests should be performed to determine if there is a statistical bias between them, using competent statistical assistance. As a minimum, the test samples to be used are as homogeneous as possible, are drawn from the material from which the disparate test results are obtained, and are assigned randomly in equal numbers to each laboratory for testing. Other materials with established test values may be used for this purpose. The test results from the two laboratories should be compared using a statistical test for unpaired data, at a

[1] This test method is under the jurisdiction of ASTM Committee D13 on Textiles and is the direct responsibility of Subcommittee D13.58 on Yarns and Fibers.

Current edition approved Nov. 1, 2022. Published December 2022. Originally approved in 1993. Last previous edition approved in 2017 as D5344–99 (2017). DOI: 10.1520/D5344-22.

[2] For referenced ASTM standards, visit the ASTM website, www.astm.org, or contact ASTM Customer Service at service@astm.org. For *Annual Book of ASTM Standards* volume information, refer to the standard's Document Summary page on the ASTM website.

[3] The last approved version of this historical standard is referenced on www.astm.org.

Copyright © ASTM International, 100 Barr Harbor Drive, PO Box C700, West Conshohocken, PA 19428-2959. United States

probability level chosen prior to the testing series. If a bias is found, either its cause must be found and corrected, or future test results must be adjusted in consideration of the known bias.

5.2 Elapsed time between spinning and testing has a marked effect on the results of the draw tension test, especially during the first 24 h. Therefore, if tested within 24 h of spinning, specimens should be compared only if tested after the same elapsed time. No specimen should be tested within 4 h of spinning because the aging process is at its most rapid rate during this period, and the differences in rate due to fiber structure are most pronounced.

5.3 The extension force of manufactured filament yarns is related to the alignment of the molecules in the yarn filaments, which influences the yarn processing behavior. Knowledge of this property of partially oriented yarn is useful to determine processing conditions.

6. Apparatus

6.1 *An Extension Force Measuring Instrument*[4] will perform the test on a running threadline. The instrument should include the following: (*1*) an input section to withdraw the yarn from a package and position the yarn for delivery to the drawing section and establish constant tension, (*2*) a drawing section that should include a constant heat source to provide for the extension of the yarn, and (*3*) a means of recording the force required to draw the yarn.

7. Sampling and Test Specimens

7.1 *Primary Sampling Unit*—Consider shipping containers of yarns to be the primary sampling unit.

7.2 *Laboratory Sampling Unit*—From the combined number of primary sampling units in a designated lot, take ten randomly selected packages as directed in Practice D2258 as laboratory sampling units.

7.3 *Test Specimens*—For acceptance testing, take one test specimen from each laboratory sampling unit. For nylon and polyester, use a 50-m test length. For polypropylene, use a 100 m test length.

8. Conditioning

8.1 Prior to conditioning, prepare the test packages by removing at least 100 m (10 yds) of yarn from the outside of each test package to avoid testing nonrepresentative yarn. No preconditioning is required.

[4] Commerical Draw Force Test Instruments are available.

NOTE 1—Preconditioning is generally not advisable because it prolongs the time required for conditioning.

8.2 Bring the specimens in package form to moisture equilibrium for testing in the standard atmosphere for testing textiles 21 ± 1°C (70 ± 2°F) and 65 ± 2 % relative humidity in accordance with Practice D1776. A 24-h period is usually sufficient.

9. Procedure

9.1 Perform all tests in the standard atmosphere for testing textiles, which is 21 °C ± 1 °C or 70 °F ± 2 °F and 65° ± 2 % relative humidity.

9.2 Calibrate the test instrument as specified by the manufacturer. Test certified control packages and evaluate them using statistical procedures to verify calibration.

9.3 *Test Conditions:*

9.3.1 Use the test conditions as specified in Table 1 for to the instrument being used. The use of these conditions will allow for the direct comparison of test results from the two instruments.

NOTE 2—Due to the difference in heater length on commercially available test instruments, the draw roll speed is different to maintain the same dwell time of the yarn in the heater. It is important to maintain the same dwell time in the heater at a given heat to assure reproducible data for extension force test.

NOTE 3—For conditions other than those given in 9.3.1, see Appendix X1 for test condition optimization, which provides for direct comparison between users.

9.4 *Procedure for Testing Specimens:*

9.4.1 Remove surface yarn from the outside of each package immediately before the test is run to remove damaged or disturbed yarn.

9.4.2 Mount the test package on a suitable holder.

9.4.3 Turn the instrument on.

9.4.4 Feed the yarn through the instrument as specified by the instrument operator's manual (see Fig. 1, Fig. 2, and Fig. 3).

9.4.5 Set the yarn test speed.

9.4.6 Check the yarn pretension, if applicable.

9.4.7 Run the test for a minimum of 1 min.

10. Calculation

10.1 Calculate the average extension force of each package in the laboratory sample from the chart recorder or input signal to the microprocessor.

10.2 Calculate the average extension force and coefficient of variation for the lot.

iTeh Standards (https://standards.iteh.ai) Document Preview ASTM D5344-22 https://standards.iteh.ai/catalog/standards/sist/0984fd96-7406-479e-bfe3-abe91357d077/astm-d5344-22

TABLE 1 Test Conditions

Polymer Type	Pretension		Heat, °C	Draw Ratio	Heater Length (Note 2)		
	cN/tex	g/den			Instrument 1 76.2 cm Draw Roll Speed, m/min	Instrument 2 104 cm Draw Roll Speed, m/min	Instrument 3 98 cm Draw Roll Speed, m/min
Polyester	0.9	0.1	150	1.6	50	68.2	64.3
Nylon	0.9	0.1	150	1.4	50	68.2	64.3
Polypropylene	0.9	0.1	140	1.6	100	136.5	128.6

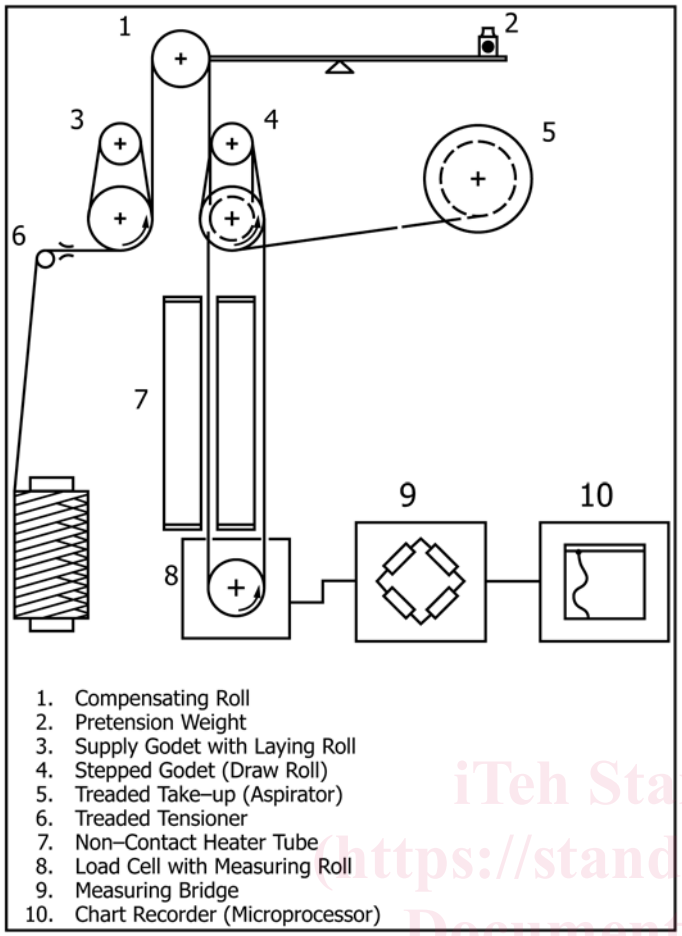

FIG. 1 Layout of Extension Force Measuring Unit—Instrument 1

11. Report

11.1 State that the test was performed as directed in this test method.

11.2 Report the following information for the laboratory sampling unit and for the lot as applicable to a material specification or contract order.

11.2.1 Lot number, individual package identification, denier, and number of filaments of feed yarn.

11.2.2 Sampling protocol (number of packages tested and number of tests per package).

11.2.3 Test conditions (see Table 1).

11.2.4 Average extension force for each package tested.

11.2.5 Average extension force and coefficient of variation for the lot.

11.2.6 Any modifications to the test.

12. Precision and Bias

12.1 *Summary*—In comparing two single observations, the difference should not exceed 1.5 percentage points of the average of the two observations in 95 out of 100 cases when both observations are taken by the same well-trained operator using the same piece of test equipment and specimens randomly drawn from the same sample of material. Larger differences likely are to occur under all other circumstances. See 12.2 – 12.4 for an explanation of the basis for this summary and for evaluations made under other conditions.

12.2 *Interlaboratory Test Data*[5]—An interlaboratory test was run in 1995 in which Instrument 1 and Instrument 2 were both used and randomly drawn samples of three materials (see Table 2) were tested in each of six laboratories (five Instrument 1 and one Instrument 2). Two operators in each laboratory tested five specimens of each material on two different days. Analysis of the data was conducted using Practice D2904, Practice D2906, and the adjunct TEX-PAC.[6] The components of variance for extension force results expressed as standard deviations are shown in Table 2.

12.3 *Critical Differences*—For the components of variance reported in Table 2, two averages of observed values should be considered significantly different at the 95 % probability level if the difference equals or exceeds those shown in Table 3.

12.4 *Bias*—The procedure of this test method produces a test value that can be defined only in terms of a test method. There is no independent, reference method by which bias may be determined. This test method has no known bias.

13. Keywords

13.1 force, extension; partially-oriented; yarn

[5] Supporting data have been filed at ASTM International Headquarters and may be obtained by requesting Research Report RR:D13-1103. Contact ASTM Customer Service at service@astm.org.

[6] Adjunct is no longer available.

iTeh Standards (https://standards.iteh.ai) Document Preview
ASTM D5344-22

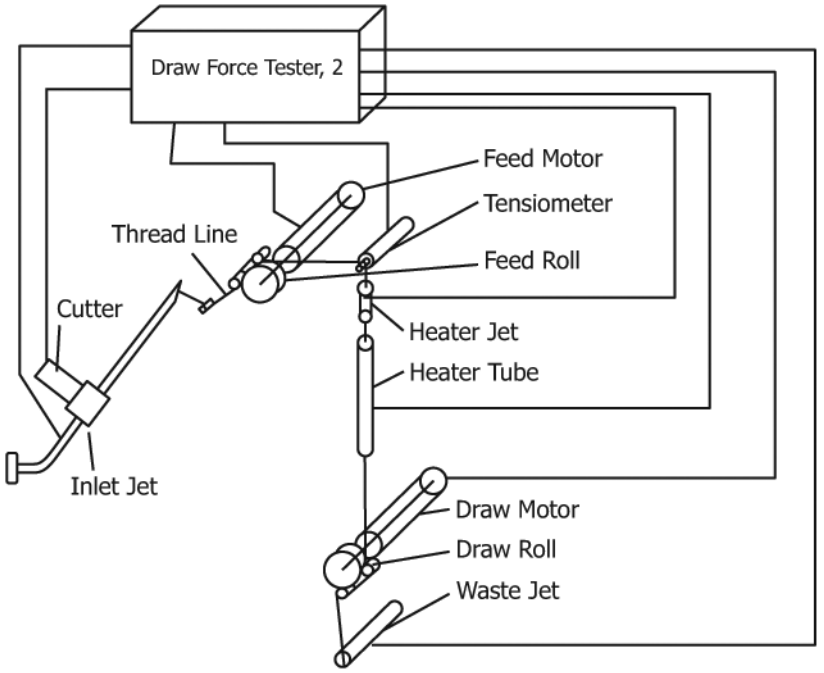

FIG. 2 Layout of Extension Force Measuring Unit—Instrument 2

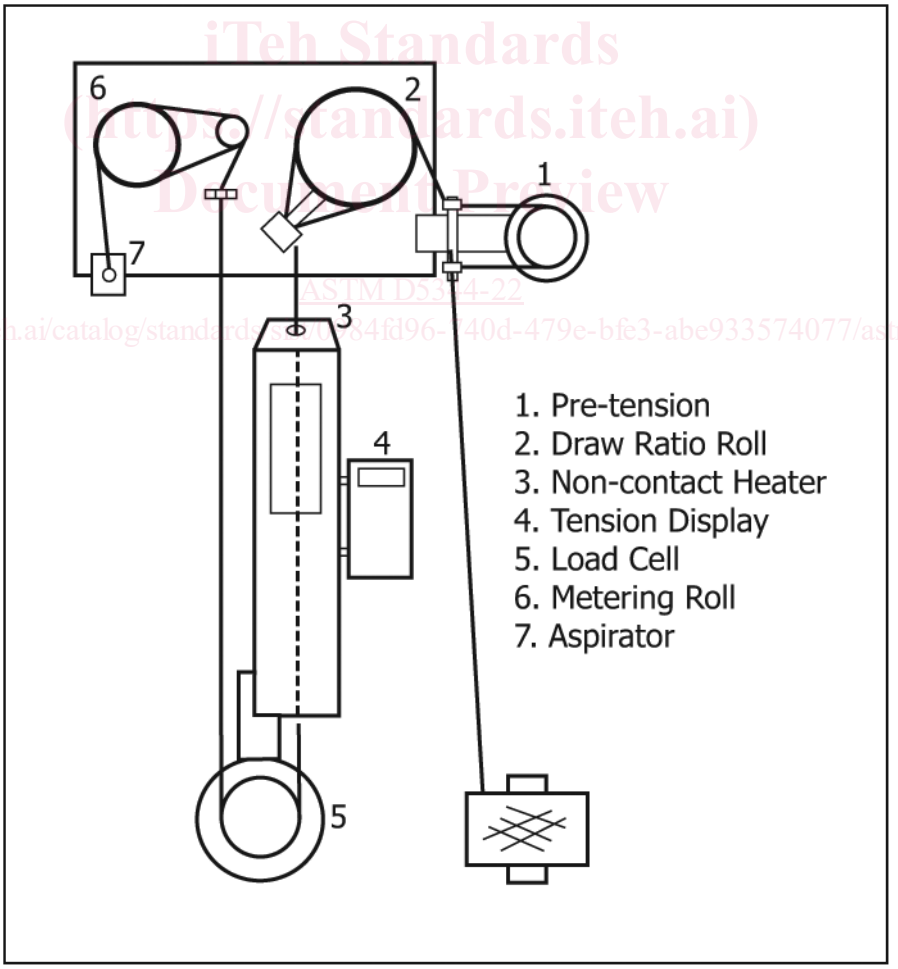

iTeh Standards
(https://standards.iteh.ai)
Document Preview
ASTM D5344-22
https://standards.iteh.ai/catalog/standards/sist/84fd96-140d-479e-bfe3-abe933574077/astm-d5344-22

FIG. 3 Layout of Extension Force Measuring Unit—Instrument 3