IEC 62300

Edition 1.0 2004-11

INTERNATIONAL STANDARD

NORME INTERNATIONALE

colour inside

Consumer audio/video equipment digital interface with plastic optical fibre

Interface numérique avec une fibre optique plastique pour équipements audio/vidéo grand public

IEC 62300:2004

IEC Central Office
3, rue de Varembé
CH-1211 Geneva 20
Switzerland

Tel.: +41 22 919 02 11
Fax: +41 22 919 03 00
info@iec.ch
www.iec.ch

About the IEC

The International Electrotechnical Commission (IEC) is the leading global organization that prepares and publishes International Standards for all electrical, electronic and related technologies.

About IEC publications

The technical content of IEC publications is kept under constant review by the IEC. Please make sure that you have the latest edition, a corrigenda or an amendment might have been published.

Useful links:

IEC publications search - www.iec.ch/searchpub

The advanced search enables you to find IEC publications by a variety of criteria (reference number, text, technical committee,…).
It also gives information on projects, replaced and withdrawn publications.

IEC Just Published - webstore.iec.ch/justpublished

Stay up to date on all new IEC publications. Just Published details all new publications released. Available on-line and also once a month by email.

Electropedia - www.electropedia.org

The world's leading online dictionary of electronic and electrical terms containing more than 30 000 terms and definitions in English and French, with equivalent terms in additional languages. Also known as the International Electrotechnical Vocabulary (IEV) on-line.

Customer Service Centre - webstore.iec.ch/csc

If you wish to give us your feedback on this publication or need further assistance, please contact the Customer Service Centre: csc@iec.ch.

A propos de la CEI

La Commission Electrotechnique Internationale (CEI) est la première organisation mondiale qui élabore et publie des Normes internationales pour tout ce qui a trait à l'électricité, à l'électronique et aux technologies apparentées.

A propos des publications CEI

Le contenu technique des publications de la CEI est constamment revu. Veuillez vous assurer que vous possédez l'édition la plus récente, un corrigendum ou amendement peut avoir été publié.

Liens utiles:

Recherche de publications CEI - www.iec.ch/searchpub

La recherche avancée vous permet de trouver des publications CEI en utilisant différents critères (numéro de référence, texte, comité d'études,…).
Elle donne aussi des informations sur les projets et les publications remplacées ou retirées.

Just Published CEI - webstore.iec.ch/justpublished

Restez informé sur les nouvelles publications de la CEI. Just Published détaille les nouvelles publications parues. Disponible en ligne et aussi une fois par mois par email.

Electropedia - www.electropedia.org

Le premier dictionnaire en ligne au monde de termes électroniques et électriques. Il contient plus de 30 000 termes et définitions en anglais et en français, ainsi que les termes équivalents dans les langues additionnelles. Egalement appelé Vocabulaire Electrotechnique International (VEI) en ligne.

Service Clients - webstore.iec.ch/csc

Si vous désirez nous donner des commentaires sur cette publication ou si vous avez des questions contactez-nous: csc@iec.ch.

IEC 62300

Edition 1.0 2004-11

INTERNATIONAL STANDARD

NORME INTERNATIONALE

colour inside

Consumer audio/video equipment digital interface with plastic optical fibre

Interface numérique avec une fibre optique plastique pour équipements audio/vidéo grand public

INTERNATIONAL
ELECTROTECHNICAL
COMMISSION

COMMISSION
ELECTROTECHNIQUE
INTERNATIONALE

PRICE CODE
CODE PRIX M

ICS 33.160.99; 33.180.20

ISBN 978-2-8322-0731-4

Warning! Make sure that you obtained this publication from an authorized distributor.
Attention! Veuillez vous assurer que vous avez obtenu cette publication via un distributeur agréé.

CONTENTS

INTERNATIONAL ELECTROTECHNICAL COMMISSION

CONSUMER AUDIO/VIDEO EQUIPMENT DIGITAL INTERFACE WITH PLASTIC OPTICAL FIBRE

FOREWORD

1) The International Electrotechnical Commission (IEC) is a worldwide organization for standardization comprising all national electrotechnical committees (IEC National Committees). The object of IEC is to promote international co-operation on all questions concerning standardization in the electrical and electronic fields. To this end and in addition to other activities, IEC publishes International Standards, Technical Specifications, Technical Reports, Publicly Available Specifications (PAS) and Guides (hereafter referred to as "IEC Publication(s)"). Their preparation is entrusted to technical committees; any IEC National Committee interested in the subject dealt with may participate in this preparatory work. International, governmental and non-governmental organizations liaising with the IEC also participate in this preparation. IEC collaborates closely with the International Organization for Standardization (ISO) in accordance with conditions determined by agreement between the two organizations.

2) The formal decisions or agreements of IEC on technical matters express, as nearly as possible, an international consensus of opinion on the relevant subjects since each technical committee has representation from all interested IEC National Committees.

3) IEC Publications have the form of recommendations for international use and are accepted by IEC National Committees in that sense. While all reasonable efforts are made to ensure that the technical content of IEC Publications is accurate, IEC cannot be held responsible for the way in which they are used or for any misinterpretation by any end user.

4) In order to promote international uniformity, IEC National Committees undertake to apply IEC Publications transparently to the maximum extent possible in their national and regional publications. Any divergence between any IEC Publication and the corresponding national or regional publication shall be clearly indicated in the latter.

5) IEC provides no marking procedure to indicate its approval and cannot be rendered responsible for any equipment declared to be in conformity with an IEC Publication.

6) All users should ensure that they have the latest edition of this publication.

7) No liability shall attach to IEC or its directors, employees, servants or agents including individual experts and members of its technical committees and IEC National Committees for any personal injury, property damage or other damage of any nature whatsoever, whether direct or indirect, or for costs (including legal fees) and expenses arising out of the publication, use of, or reliance upon, this IEC Publication or any other IEC Publications.

8) Attention is drawn to the Normative references cited in this publication. Use of the referenced publications is indispensable for the correct application of this publication.

9) Attention is drawn to the possibility that some of the elements of this IEC Publication may be the subject of patent rights. IEC shall not be held responsible for identifying any or all such patent rights.

International Standard IEC 62300 has been prepared by technical area 4: Digital system interfaces and protocols, of IEC technical committee 100: Audio, video and multimedia systems and equipment.

This bilingual version (2013-07) corresponds to the monolingual English version, published in 2004-11.

The text of this standard is based on the following documents:

FDIS	Report on voting
100/840/FDIS	100/868/RVD

Full information on the voting for the approval of this standard can be found in the report on voting indicated in the above table.

The French version of this standard has not been voted upon.

This publication has been drafted in accordance with the ISO/IEC Directives, Part 2.

The committee has decided that the contents of this publication will remain unchanged until the maintenance result date indicated on the IEC web site under "http://webstore.iec.ch" in the data related to the specific publication. At this date, the publication will be

- reconfirmed;
- withdrawn;
- replaced by a revised edition, or
- amended.

IMPORTANT – The 'colour inside' logo on the cover page of this publication indicates that it contains colours which are considered to be useful for the correct understanding of its contents. Users should therefore print this document using a colour printer.

CONSUMER AUDIO/VIDEO EQUIPMENT DIGITAL INTERFACE WITH PLASTIC OPTICAL FIBRE

1 Scope

This International Standard specifies the principal electrical and optical parameters for a consumer audio/video equipment digital interface that uses plastic optical fibre (POF).

NOTE A description of the principal features of such an interface is given in Annex C.

2 Normative references

The following referenced documents are indispensable for the application of this document. For dated references, only the edition cited applies. For undated references, the latest edition of the referenced document (including any amendments) applies.

IEC 60050-731, *International Electrotechnical Vocabulary (IEV) – Chapter 731: Optical fibre communication*

IEC 60793-2-40, *Optical fibres – Part 2-40: Product specifications – Sectional specification for category A4 multimode fibres*

IEC 60825-1, *Safety of laser products – Part 1: Equipment classification, requirements and user's guide*

IEC 60825-2, *Safety of laser products – Part 2: Safety of optical fibre communication systems*

IEC 61754-21, *Fibre optic connector interfaces – Part 21: Type SMI connector family for plastic optical fibre* [1]

3 Terms, definitions and abbreviations

3.1 Terms and definitions

For the purposes of this document, the terms and definitions contained in IEC 60050-731 apply.

3.2 Abbreviations

BER	Bit error rate
D-VCR	Digital video cassette recorder
E/O	Electrical to optical
HDTV	High definition television
O/E	Optical to electrical
PECL	Positive shifted emitter coupled logic
PMD	Physical media dependent
POF	Plastic optical fibre
RMS	Root mean square

---

[1] To be published.

Rx	Receiver
SFF	Small form factor
STB	Set top box
Tx	Transmitter

4 System consideration

4.1 Area of application

This digital interface covers audio and/or video and accompanied data systems for consumer audio/video equipment and multimedia systems in bi-direction, mainly used for audio equipment, TV-set, D-VCR, etc.

4.2 Operating environment

The environmental conditions for the digital interface are mainly defined in other standards for the individual units. Where no range is given, the interface shall operate at least within the temperature range 0 °C to 50 °C and in a relative humidity range of 25 % to 75 %.

5 Configuration of digital interface and characteristics to be specified

5.1 Configuration of digital interface

The basic configuration of this digital interface is shown in Figure 1. The reference points 1 and 4 apply to the electrical input and output of the electro-optical and opto-electrical converter respectively. The optical matching values specified in this standard apply at the reference points 2 and 3. The overall characteristics of a POF are specified in Annex A for a wide-band POF and in Annex B for the optical connectors.

NOTE Some applications based on this digital interface are illustrated in Annex C.

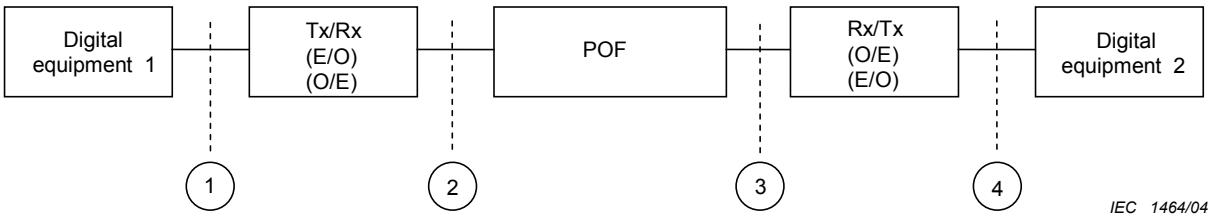

Figure 1 – Basic digital interface

5.2 Characteristics of electrical interface

The characteristics of electrical interface at the reference points 1 and 4 shown in Figure 1 shall be as specified in Table 1.

Table 1 – Electrical interface

Parameter		Units
Maximum bit rate	500	Mbit/s
Amplitude deviation from 800 mV	±250	mV
Level	PECL	
Type of signal	Differential	

5.3 Characteristics of optical interface

The characteristics of optical interface at the reference points 2 and 3 shown in Figure 1 shall be as specified in Figure 2 and Table 2.

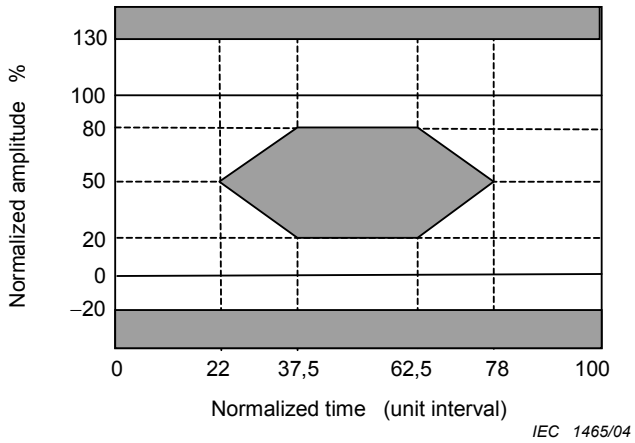

Figure 2 – Eye pattern mask at transmitter

Table 2 – Optical interface

Parameter		Units
Tx & Rx		
Maximum bit rate	500	Mbit/s
Link length	1 to 50	m
Transmitter characteristics		
Wavelength deviation from 650 nm	±10	nm
Mean launched power from 1 m POF	–6 to –2	dBm
Maximum RMS spectral width	20	nm
Minimum extinction ratio	10	dB
Receiver characteristics		
Overload (BER 10^{-12})	–2	dBm
Sensitivity (BER 10^{-12})	–19	dBm
Rise/fall time (max.) (10-90 %)	1	ns
NOTE The ambient temperature is taken to be 25 °C.		

6 Safety aspects

The transmitter shall be so designed as to prevent harmful effects to persons. Compliance shall be checked in accordance with IEC 60825-1 and IEC 60825-2.

Annex A
(normative)

Wide-band POF

A.1 Introduction

A wide-band POF introduces a high-speed digital interface between consumer audio/video equipment.

A.2 Physical dimension

The cladding diameter is 750 µm and plastic jacket diameter is 2,2 mm.

Specification details are in accordance with IEC 60793-2-40.

A.3 Characteristics

Transmission loss is less than 0,18 dB/m at 640 nm or 660 nm. Bending loss is less than 0,5 dB/turn of 25 mm radius.

Details of characteristics are in accordance with IEC 60793-2-40.

Annex B
(normative)

Optical connector

B.1 Introduction

An optical connector is about half the size of the conventional PN connector, whose size is suitable to SFF size.

B.2 Physical dimension

The principal physical characterisics of the plug and receptacle of the optical connector are shown in Figures B.1 and B.2, and in Figures B.3 and B.4, respectively.

Specification details are in accordance with IEC 61754-21.

Figure B.1 – Optical connector (plug)

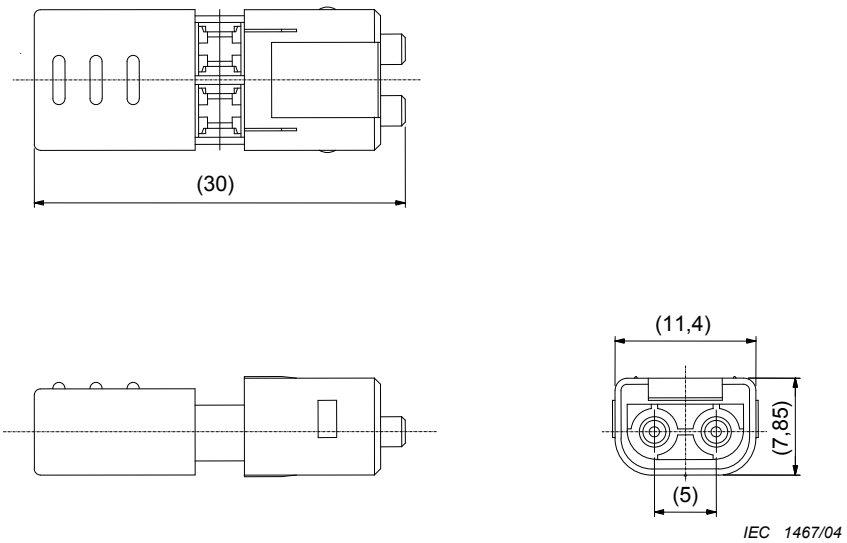

Figure B.2 – Optical connector (plug)

Figure B.3 – Optical connector (receptacle)

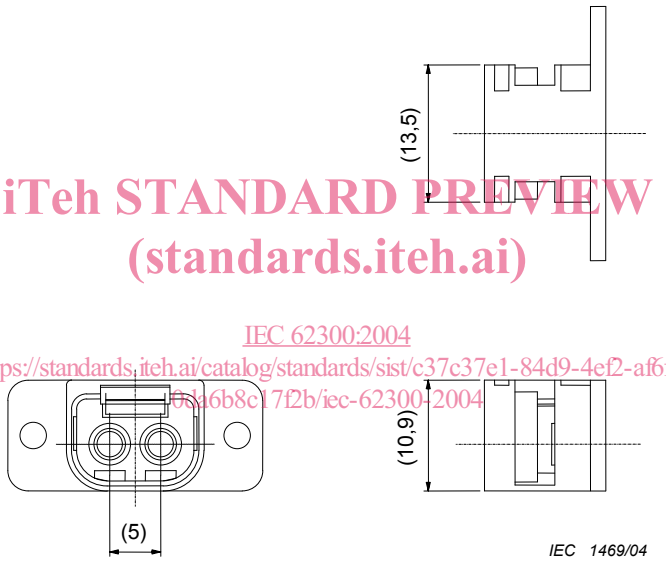

Figure B.4 – Optical connector (receptacle)

B.3 Characteristics

Details of characteristics are in accordance with IEC 61754-21.