SLOVENSKI STANDARD
SIST EN 14580:2005

01-oktober-2005

Preskuďanje naravnega kamna ï Ugotavljanje statiļ nega elastiļ nega modula

Natural stone test methods - Determination of static elastic modulus

Prüfverfahren für Naturstein - Bestimmung des statischen Elastizitätsmoduls

Méthodes d'essai pour pierres naturelles - Détermination du module d'élasticité statique

Ta slovenski standard je istoveten z: EN 14580:2005

ICS:

73.020	Rudarstvo in kamnolomsko izkopavanje	Mining and quarrying
91.100.15	Mineralni materiali in izdelki	Mineral materials and products

SIST EN 14580:2005 **en**

EUROPEAN STANDARD

NORME EUROPÉENNE

EUROPÄISCHE NORM

EN 14580

April 2005

ICS 73.020; 91.100.15

English version

Natural stone test methods - Determination of static elastic modulus

Méthodes d'essai pour pierres naturelles - Détermination du module d'élasticité statique

Prüfverfahren für Naturstein - Bestimmung des statischen Elastizitätsmoduls

This European Standard was approved by CEN on 3 March 2005.

CEN members are bound to comply with the CEN/CENELEC Internal Regulations which stipulate the conditions for giving this European Standard the status of a national standard without any alteration. Up-to-date lists and bibliographical references concerning such national standards may be obtained on application to the Central Secretariat or to any CEN member.

This European Standard exists in three official versions (English, French, German). A version in any other language made by translation under the responsibility of a CEN member into its own language and notified to the Central Secretariat has the same status as the official versions.

CEN members are the national standards bodies of Austria, Belgium, Cyprus, Czech Republic, Denmark, Estonia, Finland, France, Germany, Greece, Hungary, Iceland, Ireland, Italy, Latvia, Lithuania, Luxembourg, Malta, Netherlands, Norway, Poland, Portugal, Slovakia, Slovenia, Spain, Sweden, Switzerland and United Kingdom.

EUROPEAN COMMITTEE FOR STANDARDIZATION
COMITÉ EUROPÉEN DE NORMALISATION
EUROPÄISCHES KOMITEE FÜR NORMUNG

Management Centre: rue de Stassart, 36 B-1050 Brussels

Ref. No. EN 14580:2005: E

Contents

Foreword

This document (EN 14580:2005) has been prepared by Technical Committee CEN/TC 246 “Natural stones”, the secretariat of which is held by UNI.

This European Standard shall be given the status of a national standard, either by publication of an identical text or by endorsement, at the latest by October 2005, and conflicting national standards shall be withdrawn at the latest by October 2005.

This document is one of the series of draft standards for tests on natural stone.

Test methods for natural stone consist of the following parts:

EN 1925, *Natural stone test methods – Determination of water absorption coefficient by capillarity*

EN 1926, *Natural stone test methods – Determination of compressive strength*

EN 1936, *Natural stone test methods – Determination of real density and apparent density, and of total and open porosity*

EN 12370, *Natural stone test methods – Determination of resistance to salt crystallisation*

EN 12372, *Natural stone test methods – Determination of flexural strength under concentrated load*

EN 12407, *Natural stone test methods – Petrographic examination*

EN 13161, *Natural stone test methods – Determination of flexural strength under constant moment*

EN 13364, *Natural stone test methods – Determination of the breaking load at dowel hole*

EN 13373, *Natural stone test methods - Determination of geometric characteristics on units*

EN 13755, *Natural stone test methods – Determination of water absorption at atmospheric pressure*

EN 13919, *Natural stone test methods – Determination of resistance to ageing by SO_2 action in the presence of humidity*

EN 14066, *Natural stone test methods – Determination of resistance to ageing by thermal shock*

EN 14147, *Natural stone test methods – Determination of resistance to ageing by salt mist*

EN 14157, *Natural stone test methods – Determination of the abrasion resistance*

EN 14158, *Natural stone test methods – Determination of rupture energy*

EN 14205, *Natural stone test methods – Determination of Knoop hardness*

EN 14231, *Natural stone test methods – Determination of the slip resistance by means of the pendulum tester*

EN 14579, *Natural stone test methods – Determination of sound speed propagation*

prEN 14580, *Natural stone test methods – Determination of static elastic modulus*

EN 14581, *Natural stone test methods – Determination of linear thermal expansion coefficient*

No existing document is superseded.

According to the CEN/CENELEC Internal Regulations, the national standards organizations of the following countries are bound to implement this European Standard : Austria, Belgium, Cyprus, Czech Republic, Denmark, Estonia, Finland, France, Germany, Greece, Hungary, Iceland, Ireland, Italy, Latvia, Lithuania, Luxembourg, Malta, Netherlands, Norway, Poland, Portugal, Slovakia, Slovenia, Spain, Sweden, Switzerland and United Kingdom.

1 Scope

The document specifies a method to determine the static elastic modulus of natural stone in uniaxial compression.

2 Normative references

The following referenced documents are indispensable for the application of this document. For dated references, only the edition cited applies. For undated references, the latest edition of the referenced document (including any amendments) applies.

EN 1926, *Natural stone test methods – Determination of compressive strength*

EN 12390-4, *Testing hardened concrete – Part 4: Compressive strength – Specification for testing machines*

3 Principle

The longitudinal deformations of a specimen under basic and upper uniaxial compressive stresses are measured. From these values the static elastic modulus is calculated.

4 Symbols and definitions

E_b static elastic modulus in Megapascals (MPa);

σ_u basic stress, of approximately 2 % of the mean value of the tested compressive strength, prior to the third loading cycle, in MPa;

σ_o upper stress, of approximately 33 % of the mean value of the tested compressive strength, during the third loading cycle in MPa;

ε_u mean unitary deformation under the basic stress at point A (see Figure 2);

ε_o mean unitary deformation under the upper stress at point B (see Figure 2).

5 Apparatus

5.1 A compression testing machine of appropriate force in accordance with EN 12390-4 and calibrated according to that standard.

5.2 Length measuring devices (for example inductance gauges) or strain measuring devices (for example strain gauges) with a gauge length of at least ten grain diameters with a minimum of 50 mm. The apparatus shall be capable of measuring changes in strain of 5 m/m $\times$ 10^{-6} m/m or less.

5.3 A ventilated oven which can maintain a temperature of (70 $\pm$ 5) °C.

6 Preparation of the specimens

6.1 Sampling

The sampling is not the responsibility of the test laboratory except where especially requested. At least six specimens shall be selected from an homogeneous batch.

6.2 General

The test may be carried out as an identification test or as a technological test.

In identification tests the conditioning of the specimens before testing is performed according to 6.3.5.1. For the conditioning before testing in technological tests see 6.3.5.2.

6.3 Test specimens

6.3.1 Dimensions of test specimens

The specimens shall be cylinders with a diameter (d) or prisms with a plan dimension (a) of 50 mm min. The diameter or the plan dimension of the specimen shall be related to the size of the largest cristal grain in the stone with a ratio of 10:1. The ratio height to diameter or height to smaller plan dimension shall be between 2 and 4.

6.3.2 Dimensions of the gauges

The minimum gauge length shall be the diameter or the larger plan dimension (b) of the specimen (Figure 1).

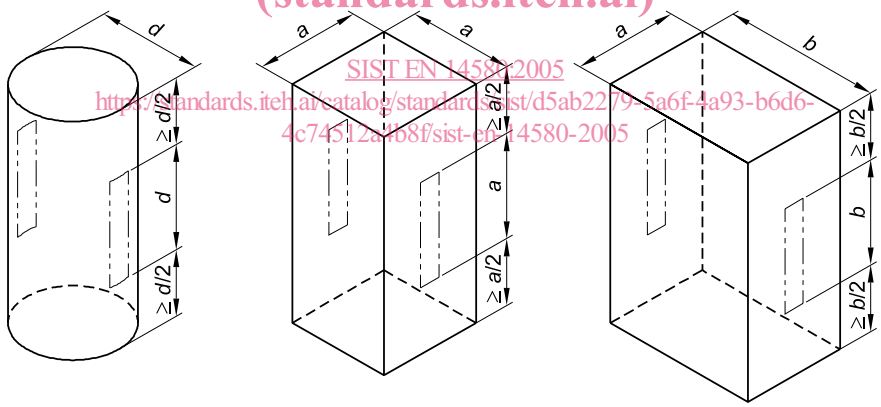

Figure 1 — Arrangement of the length (or strain) measuring devices

6.3.3 Surface finish

6.3.3.1 General

The faces through which the load is to be applied shall be plane to a tolerance of 0,1 mm and shall not depart from perpendicularity to the axis of the specimen by more than 0,01 radian or 1 mm in 100 mm. The sides of the specimen shall be smooth and free of abrupt irregularities and straight to within 0,3 mm over the full length of the specimen.

To meet the above mentioned requirements, the specimen shall be finished on either lathe or surface grinder, with a final touching on a lapping machine if needed.

Capping with mortar according to the procedure indicated in 6.3.3.2 is admitted only if the indicated tolerances are not obtainable with the prescribed mechanical preparation. This condition shall be clearly indicated in the test report.

6.3.3.2 Capping with mortar

It is possible to cap the specimen by using a mortar made up with cement CEM I 52,5 R according to EN 197-1 and waiting as much as needed for hardening.

6.3.4 Planes of anisotropy

If the stone shows planes of anisotropy (e.g. bedding, foliation), the axis of the specimens shall be perpendicular to the principal planes of anisotropy.

If a test with loading perpendicular to any other orientation is required, another set of specimens with the same dimensional characteristics shall be prepared.

6.3.5 Conditioning of specimens before testing

6.3.5.1 Identification test

The specimens shall be dried at (70 ± 5) °C to a constant mass.

Constant mass is reached when the difference between two weighings carried out at an interval of (24 ± 2) h is not greater than 0,1 % of the first of the two masses.

6.3.5.2 Technological test

The conditioning of the specimens may be different from the identification test, according to the use in practice. The conditioning shall be described in the test report.

6.3.6 Attaching the gauges on the specimens

At least two length (or strain) measuring devices shall be attached to the specimen parallel to its axis in such a way that they are symmetrical about the middle of the specimen and equally spaced. They shall not be nearer to either end of the specimen than a distance equal to half its diameter for cylindrical and equal to half of the larger plan dimension of the end face for prismatic specimens (see Figure 1).

7 Test procedure

7.1 General

Before the static elastic modulus test is carried out, the compressive strength determined in accordance with EN 1926 shall be known.

7.2 Measuring the specimen

The cross-sectional dimension(s) of the test specimens (diameter for cylindrical and plan dimension(s) for prismatic test specimens) shall be measured to the nearest 0,1 mm by averaging two measurements taken at right angles to each other at about the upper height and the lower height of the specimen. The average plan dimension(s) or the average diameter shall be used for calculating the cross-sectional area. The height of the specimen shall be determined to the nearest 0,1 mm.

7.3 Placing the specimen in the testing machine

The specimen shall be placed centrally in the testing machine and the upper plate aligned so that it is in full contact with the specimen.

7.4 Loading

The specimen shall be subjected to cycles of loading and unloading from the basic stress.