# SLOVENSKI STANDARD
# SIST-TS TS 101 884 V1.1.1:2004

**01-april-2004**

---

**Harmonizacija telekomunikacij in internetnega protokola prek omrežij (TIPHON), 3. izdaja - Tehnologija preslikave - Implementacija arhitekture TIPHON z uporabo SIP**

Telecommunications and Internet Protocol Harmonization Over Networks (TIPHON) Release 3; Technology Mapping; Implementation of TIPHON architecture using SIP



**Ta slovenski standard je istoveten z: TS 101 884 Version 1.1.1**



---

**ICS:**

| | | |
|---|---|---|
| 33.020 | Telekomunikacije na splošno | Telecommunications in general |

**SIST-TS TS 101 884 V1.1.1:2004** **en**

# ETSI TS 101 884 V1.1.1 (2002-09)

*Technical Specification*

## Telecommunications and Internet Protocol Harmonization Over Networks (TIPHON) Release 3; Technology Mapping; Implementation of TIPHON architecture using SIP

Reference
DTS/TIPHON-03018

Keywords
architecture, IP, SIP, telephony, VoIP

***ETSI***

650 Route des Lucioles
F-06921 Sophia Antipolis Cedex - FRANCE

Tel.: +33 4 92 94 42 00 Fax: +33 4 93 65 47 16

Siret N° 348 623 562 00017 - NAF 742 C
Association à but non lucratif enregistrée à la
Sous-Préfecture de Grasse (06) N° 7803/88



***Important notice***

Individual copies of the present document can be downloaded from:
http://www.etsi.org

The present document may be made available in more than one electronic version or in print. In any case of existing or perceived difference in contents between such versions, the reference version is the Portable Document Format (PDF). In case of dispute, the reference shall be the printing on ETSI printers of the PDF version kept on a specific network drive within ETSI Secretariat.

Users of the present document should be aware that the document may be subject to revision or change of status. Information on the current status of this and other ETSI documents is available at
http://portal.etsi.org/tb/status/status.asp

If you find errors in the present document, send your comment to:
editor@etsi.fr

***Copyright Notification***

# Contents

# Intellectual Property Rights

IPRs essential or potentially essential to the present document may have been declared to ETSI. The information pertaining to these essential IPRs, if any, is publicly available for **ETSI members and non-members**, and can be found in ETSI SR 000 314: *"Intellectual Property Rights (IPRs); Essential, or potentially Essential, IPRs notified to ETSI in respect of ETSI standards"*, which is available from the ETSI Secretariat. Latest updates are available on the ETSI Web server (http://webapp.etsi.org/IPR/home.asp).

Pursuant to the ETSI IPR Policy, no investigation, including IPR searches, has been carried out by ETSI. No guarantee can be given as to the existence of other IPRs not referenced in SR 000 314 (or the updates on the ETSI Web server) which are, or may be, or may become, essential to the present document.

# Foreword

This Technical Specification (TS) has been produced by ETSI Project Telecommunications and Internet Protocol Harmonization Over Networks (TIPHON).

# Introduction

The SIP profile contained in the present document is derived from examination of:

- the capabilities required by TS 101 878 [6] for the support of TIPHON as identified in TR 101 300 [4];
- the TIPHON baseline architecture described in TS 101 314 [1]; and
- the primitives, parameters and procedures defined in TS 101 882 [7].



The documents listed above are compared and evaluated against the IETF protocols SIP [SIP], SDP [SDP] and DNS [DNS].

The relationship between the TIPHON documents can be better seen in the figure 1.

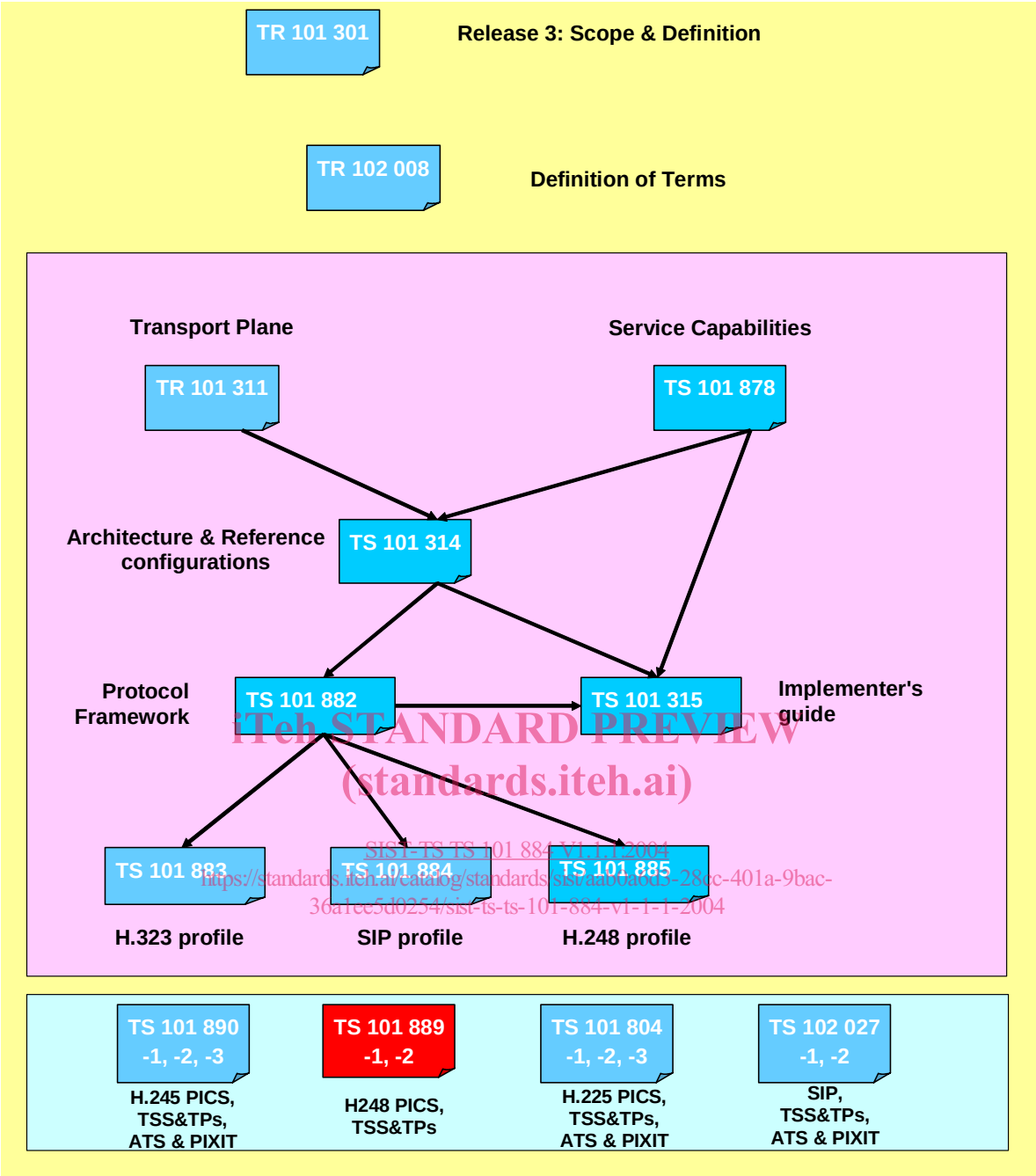




**Figure 1: Relationship with other TIPHON Release 3 documents**

- TR 101 311 [11] provides the requirements on the transport plane.
- TS 101 878 [6] defines service capabilities that are used in the TIPHON Release 3 for a simple call.
- TS 101 882 [7] provides the Protocol Framework based on the TIPHON Release 3 architecture to implement the simple call service capabilities as defined in the present document.
- TS 101 315 [5] is an implementer's guide that shows how to use of the meta-protocol to realize the capabilities as defined in TS 101 878 [6].
- TS 101 883 [12] provides the protocol mappings for the ITU-T H-323 profile.
- TS 101 884 (the present document) provides the protocol mappings for the SIP profile.

- TS 101 885 [13] provides the protocol mappings for the ITU-T H-248 profile.
- TS 101 314 [1] provides the architecture and reference configurations for TIPHON Release 3.

# 1 Scope

The present document describes how the SIP and SDP protocols can be used to implement TIPHON architecture, as defined in [5], and the Context and Behaviour of Meta-Protocol, as defined in [7].

The scope of the present document is limited to the mapping of the following parts of Meta-Protocol to SIP:

- Registration Meta-Protocol;
- Call Control Meta-Protocol;
- Bearer Control Meta-Protocol.

The present document is applicable to equipment performing the roles of terminal, Registration server, proxy Application Server, and gateway, and also to entities within the IP network that are necessary to support the TIPHON Release 3.

# 2 References

The following documents contain provisions which, through reference in this text, constitute provisions of the present document.

- References are either specific (identified by date of publication and/or edition number or version number) or non-specific.
- For a specific reference, subsequent revisions do not apply.
- For a non-specific reference, the latest version applies.



[1] ETSI TS 101 314: "Telecommunications and Internet Protocol Harmonization Over Networks (TIPHON) Release 3; Abstract Architecture and Reference Points Definition; Network Architecture and Reference Points".

[2] IETF RFC 3261: "SIP: Session Initiation Protocol".

[3] IETF RFC 2327: "SDP: Session Description Protocol".

[4] ETSI TR 101 300: "Telecommunications and Internet Protocol Harmonization Over Networks (TIPHON); Description of Technical Issues".

[5] ETSI TS 101 315: "Telecommunications and Internet Protocol Harmonization Over Networks (TIPHON) Release 3; Functional entities, information flow and reference point definitions; Guidelines for application of TIPHON functional architecture to inter-domain services".

[6] ETSI TS 101 878: "Telecommunications and Internet Protocol Harmonization Over Networks (TIPHON) Release 3; Service Capability Definition; Service Capabilities for a simple call".

[7] ETSI TS 101 882: "Telecommunications and Internet Protocol Harmonization Over Networks (TIPHON) Release 3; Protocol Framework Definition; General (meta-protocol)".

[8] IETF RFC 3262: "Reliability of Provisional Responses in Session Initiation Protocol (SIP)".

[9] ETSI TR 101 301: "Telecommunications and Internet Protocol Harmonization Over Networks (TIPHON) Release 3; Release Definition; TIPHON Release 3 Definition".

[10] ETSI TR 102 008: "Telecommunications and Internet Protocol Harmonization Over Networks (TIPHON) Release 3; Terms and Definitions".

[11] ETSI TR 101 311: "Telecommunications and Internet Protocol Harmonization Over Networks (TIPHON) Release 3; Service Independent requirements definition; Transport Plane".

[12] ETSI TS 101 883: "Telecommunications and Internet Protocol Harmonization Over Networks (TIPHON) Release 3; Technology Mapping; Implementation of TIPHON architecture using H.323".

[13] ETSI TS 101 885: "Telecommunications and Internet Protocol Harmonization Over Networks (TIPHON) Release 3; Technology Mapping; Technology Mapping of TIPHON reference point N to H.248/MEGACO protocol".

[14] ETSI TS 101 890 (all parts): "Telecommunications and Internet Protocol Harmonization Over Networks (TIPHON) Release 3; Technology Compliance Specifications; TIPHON profile for ITU-T H.245".

[15] ETSI TS 101 889-1: "Telecommunications and Internet Protocol Harmonization Over Networks (TIPHON) Release 3; Technology Compliance Specification; TIPHON profile for ITU-T H.248; Part 1: Protocol Implementation Conformance Statement (PICS) proforma specification".

[16] ETSI TS 101 889-2: "Telecommunications and Internet Protocol Harmonization Over Networks (TIPHON) Release 3; Technology Compliance Specification; TIPHON profile for ITU-T H.248; Part 2: Test Suite Structure and Test Purposes (TSS&TP) specification".

[17] ETSI TS 101 804 (all parts): "Telecommunications and Internet Protocol Harmonization Over Networks (TIPHON) Release 3; Technology compliance specifications; Part 1: Revision/Update of H.225.0 Protocol Implementation Conformance Statement (PICS) proforma specification for Terminal, Gatekeeper and Gateway".

[18] ETSI TS 102 027-1: "Telecommunications and Internet Protocol Harmonization Over Networks (TIPHON); Technology Compliance Specification; Draft IETF SIP RFC2543bis-04; Part 1: Test Suite Structure and Test Purposes (TSS&TP) specification".

[19] ETSI TR 101 877: "Telecommunications and Internet Protocol Harmonization Over Networks (TIPHON); Requirements Definition Study; Scope and Requirements for a Simple call".



# 3 Definitions and abbreviations

## 3.1 Definitions

For the purposes of the present document, the terms and definitions given in TR 101 877 [19] and TS 101 878 [6] apply.

## 3.2 Abbreviations

For the purposes of the present document, the following abbreviations apply:

| | |
|---|---|
| API | Application Programming Interface |
| ASN.1 | Abstract Syntax Notation One |
| B2BUA | Back-to-Back User Agent |
| BC | Bearer Control |
| CC | Call Control |
| FE | Functional Entity |
| FG | Functional Grouping |
| GFG | Gateway Functional Group |
| GoS | Grade of Service |
| ICF | Inter-Connect Function |
| IP | Internet Protocol |
| IPTN | IP Telephony Network |
| ISDN | Integrated Services Digital Network |
| MC | Media Control |
| MPMU | Meta Protocol Message Unit |
| MSC | Message Sequence Chart |
| NFG | Network Functional Group |

| | |
|---|---|
| PCM | Pulse Code Modulation |
| PDU | Protocol Data Unit |
| RpoA | Registration point of Attachment |
| PSTN | Public Switched Telephone Network |
| QoS | Quality of Service |
| SAP | Service Access Point |
| SC | Service Control |
| SCN | Switched Circuit Networks |
| SDL | Specification and Description Language |
| SpoA | Service point of Attachment |
| SLA | Service Level Agreement |
| SL | Service Layer |
| TCC-SAP | TIPHON Call Control SAP |
| TE | Terminal Equipment |
| TFG | Terminal Functional Group |
| TLL-SAP | TIPHON Lower Layer SAP |
| TRL | TIPHON Resource Location |
| TR-SAP | TIPHON Registration SAP |
| TT-SAP | TIPHON Transport SAP |
| UA | User Agent |
| UAC | User Agent Client |
| UAS | User Agent Server |
| URI | Uniform Resource Identifier |

# 4 Implementation of TIPHON functional architecture using SIP



The SIP technology includes two protocols of interest to TIPHON:



- SIP - As defined in SIP RFC [2] this is often used as a client/server based call control protocol.
- SDP - A Bearer Control protocol, as defined in IETF RFC 2327 [3].

SIP identifies a number of functional entities: SIP User Agents (UA), SIP registrar, SIP servers, SIP proxies and SIP gateways. The present document describes the behaviour of, and the communication between these functional entities in the context of TIPHON.

TS 101 314 [1] defines a number of reference points and Functional Entities (FE). These reference points and Functional Entities need to be mapped to SIP based architecture before behaviours and message flows can be defined. For this purpose, an introduction to the SIP Architecture is given below, along with its mapping to TIPHON functional architecture.

## 4.1 SIP functional architecture

The SIP Architecture has the following functional elements, as defined in [2].

**User Agent (UA):** The user agent is the functional entity that may initiate or respond to a SIP request.

In a TIPHON compliant system, the SIP User Agent (UA) shall provide the functionality of the terminal functional group. The terminal functional group performs the roles of the terminal registration functional group, originating terminal functional group and the terminating terminal functional group. The reference points S1, SC1 and N1 are regarded as internal to the TE. The UA may use the DNS server.

**Back-to-Back User Agent (B2BUA):** B2BUA is a logical entity that receives a request and processes it as a User Agent Server (UAS). In order to determine how a request should be answered, it acts as a User Agent Client (UAC) and generates requests. Unlike a proxy server (stateless), it maintains a dialogue state, and must participate in all requests sent on the dialogues it has established. TIPHON recommends the use of a B2BUA, as network functional groupings involved in providing a service.

**SIP Server:** A SIP server provides a service to SIP user agents and/or proxies and other servers. An example of such a server can be a redirect server.

**Proxy server:** A proxy server acts as both the client and server: It receives a request from an entity, and initiates a request on behalf of the requesting entity, hence acting as a server for the requesting entity.

- **Registration server:** The registration server processes registration requests; as a minimum this involves updating the users contact list and responding to the originator of the request. Typically a registration server is co-located with either the proxy or the redirect server, and may be adapted to perform location-based services.
- **SIP gateway:** A SIP gateway acts as an interworking medium between the PSTN and IP networks. It provides an interworking between the SIP and other call control protocols, such as ISUP, as well as interworking between the TDM and IP media flows.

Figure 2 shows how the SIP functional elements map onto the functional layers in the IP Telephony Application plane.

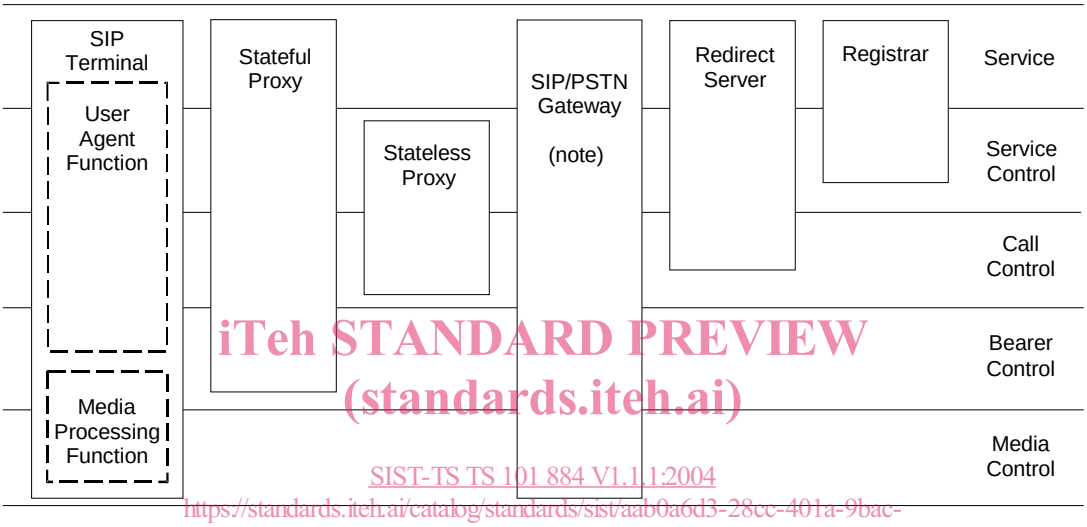




NOTE: Compound gateway.

**Figure 2: The SIP example mapped onto the IP telephony application plane**

The UA maps to Service, Service Control (SC), Call Control (CC), and Bearer Control (BC) layers.

The statefull proxy maps to the TIPHON service and call control layer.

The SIP PSTN gateway covers all TIPHON layers.

The redirect server works at TIPHON Service Control layer.

The registrar works at TIPHON Service and Service Control layer.

Figure 3 shows the SIP entities and how they map to the functional layers and the Functional Groups (FG) defined in [1].

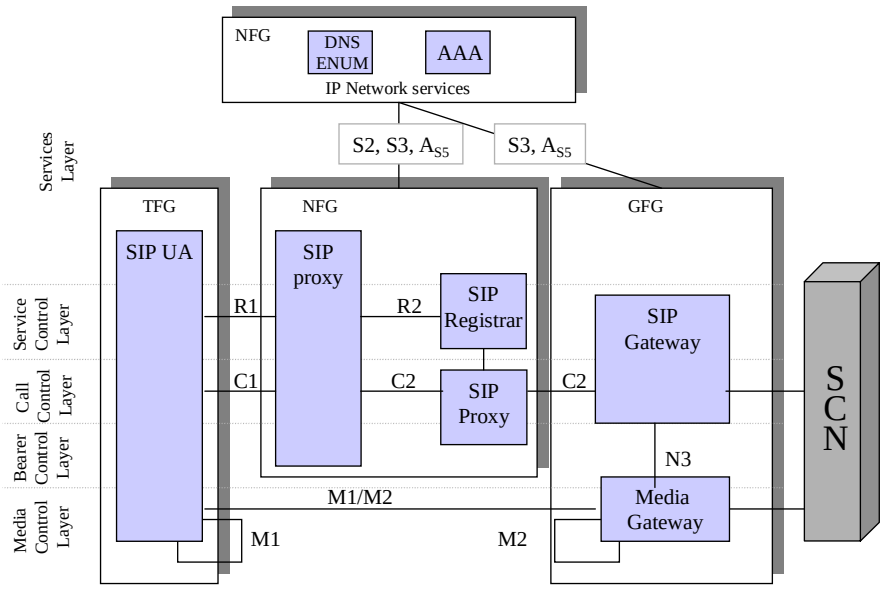


NOTE: All entities in an IP network "normally" use the DNS service. In the context of the present document only relations to the DNS with ENUM extensions are shown.

**Figure 3: SIP Architecture mapped to the TIPHON Functional layers and functional groups**



The SIP proxy, SIP server, SIP gateway and the SIP Registration Server shall provide the functionality required in the Network Functional Group (NFG). Reference point S2, S3 and $A_{S5}$ are between the Network Functional Group and other IP Network services e.g. DNS. The Network Functional Group may play the roles of an originating Network Functional Group, an intermediate Network Functional Group or a terminating Network Functional Group.

NOTE: The Network Functional Group may include Media Control Functional Entities, e.g. for giving announcements, mixing media streams etc. This is, however, out of scope of the present document.



The present document describes the mapping of functional architecture [1], as well as the context, behaviour and procedures [7] that the SIP and SDP protocols must adhere to, to be TIPHON compliant. In TIPHON Release 3, SIP is mapped to reference points R1, R2, C1, C2, where R1 and R2 refer to the registration reference points, whereas C1 and C2 refer to call & bearer control reference points. The R and C reference points will be dealt with separately in the present document, because of the different nature of services they provide.

# 5 Registration

This clause applies to SIP terminals, SIP proxies and SIP registrars and describes how the SIP [2] shall be used in order to implement the registration meta-protocol defined in the annex A of TS 101 882 [7].

SIP [2] defines how a user registers with a SIP registrar in one service provider's domain. The present document extends this registration procedure to also include the registration of users via another service provider's domains.

NOTE 1: The intention of this clause is not repeat the SIP RFC [2] text, but to select options and to clarify relations with TIPHON architecture in TS 101 314 [1], and the registration meta protocol in TS 101 882 [7].

Two registration scenarios shall be supported:

- The "user at home" scenario; and
- The "roaming user" scenario.

NOTE 2: For more details and examples of the two scenarios see TS 101 315 [5].

The registration meta-protocol defines three steps for a user to access a service application:

1) location of the Registration point of Attachment (RpoA);

2) registration; and

3) attachment to the service application.

The objective with the step 1 is to locate the Registration point of Attachment. This step may be implemented using DHCP. This step is out of scope of the present document.

Step 2 is a "Single log-on" procedure where a user registers to one registrar and receives tickets for all service applications available to the user. SIP does not support the "Single log-on" procedure at present, hence out of scope of the present document.

Step 3 describes how users attach to (or detach from) a service application. In the context of the present document the service application is the VoIP service application based on SIP. Therefore, the SIP registrant registers with a SIP registrar providing both the registration and VoIP services.

Figure 4 shows how TS 101 882 [7] M-PDUs is mapped to corresponding SIP [2] methods.

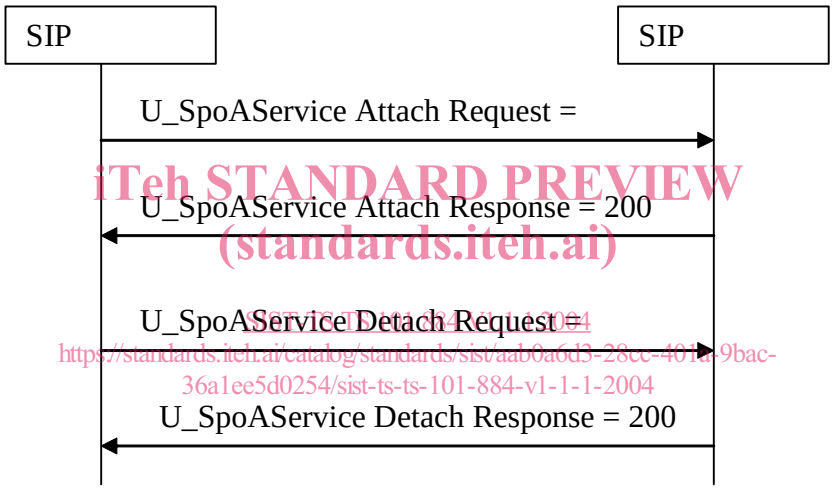




**Figure 4: Mapping of TS 101 882 [7] M-PDUs to SIP [2] methods**

Figure 5 shows the message flow for the "user at home" scenario where the SIP terminal registers directly to the SIP registrar in the home network without involving intermediate networks. The information flows between the SIP terminal and the SIP registrar in the home network flows on TIPHON reference point R1.