SLOVENSKI STANDARD

SIST ETS 300 392-12-19:1999

01-julij-1999

Prizemni snopovni radio (TETRA) – Govor in podatki (V+D) – 12. del: Dopolnilne storitve stopnje 3 – 19. poglavje: Zapora dohodnih klicev (BIC)

Terrestrial Trunked Radio (TETRA); Voice plus Data (V+D); Part 12: Supplementary services stage 3; Sub-part 19: Barring of Incoming Calls (BIC)

iTeh STANDARD PREVIEW
(standards.iteh.ai)

Ta slovenski standard je istoveten z: **EN 300 392-12-19 E1:1996-12**

SIST EN 300 392-12-19 V1.1.1:2003
https://standards.iteh.ai/catalog/standards/sist/22d82f68-b620-4c43-939f-90160ba66d91/sist-en-300-392-12-19-v1-1-1-2003

ICS:

33.070.10	Prizemni snopovni radio (TETRA)	Terrestrial Trunked Radio (TETRA)

SIST ETS 300 392-12-19:1999 **en**

2003-01.Slovenski inštitut za standardizacijo. Razmnoževanje celote ali delov tega standarda ni dovoljeno.

SIST EN 300 392-12-19 V1.1.1:2003

iTeh STANDARD PREVIEW
(standards.iteh.ai)

SIST EN 300 392-12-19 V1.1.1:2003
https://standards.iteh.ai/catalog/standards/sist/22d82f68-b620-4c43-939f-90160ba66d91/sist-en-300-392-12-19-v1-1-1-2003

SIST EN 300 392-12-19 V1.1.1:2003

EUROPEAN TELECOMMUNICATION STANDARD

DRAFT

pr **ETS 300 392-12-19**

December 1996

Source: ETSI TC-RES

Reference: DE/RES-06001-12-19

ICS: 33.020

Key words: TETRA, V+D, BIC

Radio Equipment and Systems (RES); Trans-European Trunked Radio (TETRA); Voice plus Data (V+D); Part 12: Supplementary Services (SS) Stage 3; Part 12-19: Barring of Incoming Calls (BIC)

iTeh STANDARD PREVIEW
(standards.iteh.ai)
SIST EN 300 392-12-19 V1.1.1:2003
https://standards.iteh.ai/catalog/standards/sist/...
90160ba66d91/sist-en-300-392-12-19-v1-1-1-2003

ETSI

European Telecommunications Standards Institute

ETSI Secretariat

Postal address: F-06921 Sophia Antipolis CEDEX - FRANCE
Office address: 650 Route des Lucioles - Sophia Antipolis - Valbonne - FRANCE
X.400: c=fr, a=atlas, p=etsi, s=secretariat - **Internet:** secretariat@etsi.fr

Tel.: +33 4 92 94 42 00 - Fax: +33 4 93 65 47 16

Copyright Notification: No part may be reproduced except as authorized by written permission. The copyright and the foregoing restriction extend to reproduction in all media.

© European Telecommunications Standards Institute 1996. All rights reserved.

SIST EN 300 392-12-19 V1.1.1:2003

iTeh STANDARD PREVIEW
(standards.iteh.ai)
SIST EN 300 392-12-19 V1.1.1:2003
https://standards.iteh.ai/catalog/standards/sist/22d82f68-b620-4c43-939f-90160ba66d91/sist-en-300-392-12-19-v1-1-1-2003

Whilst every care has been taken in the preparation and publication of this document, errors in content, typographical or otherwise, may occur. If you have comments concerning its accuracy, please write to "ETSI Editing and Committee Support Dept." at the address shown on the title page.

SIST EN 300 392-12-19 V1.1.1:2003

Contents

Foreword 5

1 Scope 7

2 Normative references 7

3 Definitions and abbreviations 7
3.1 Definitions 7
3.2 Abbreviations 8

4 SS-BIC stage 3 specification 9
4.1 Functional model description 9
4.2 Relationship with a basic and packet data service 10

5 SS-BIC service description 11
5.1 General 11
5.2 Offered services 11
5.3 TNSS-SAP 11
5.4 TNCC-SAP 12
5.5 TNSCLNS-SAP 12
5.6 TNCO-SAP 12
5.7 SS-BIC services offered over the TNSS-SAP 13
5.7.1 SS-BIC primitives 13
5.7.2 DEFINE request 13
5.7.3 DEFINE confirm 14
5.7.4 INFORM-USER indication 15
5.7.5 INFORM-USER response 15
5.7.6 INTERROGATE request 16
5.7.7 INTERROGATE confirm 16
5.7.8 CALL-BARRED indication 17
5.8 Parameter descriptions 17
5.9 Mapping of SS-BIC primitives to TNSS primitives 19

6 SS-BIC protocol description 20
6.1 General 20
6.2 SS-BIC protocol states 21
6.2.1 Protocol states of FE1 21
6.2.2 Protocol states of FE2 21
6.2.2.1 State IDLE 21
6.2.2.2 State WAIT-FOR-ACK 22
6.2.3 Protocol states of CC to which FE2 is collocated 22
6.2.4 Protocol states of FE3 22
6.2.5 Protocol states of FE4 22
6.2.6 Protocol states of FE5 23
6.2.7 Protocol states of CCA to which FE5 is collocated 23
6.2.7.1 State IDLE 23
6.2.7.2 State MO_CALL_SETUP 23
6.3 Procedures 23
6.3.1 Procedures for FE1 23
6.3.2 Procedures for FE2 23
6.3.2.1 Definition in FE2 23
6.3.2.2 Distribution in FE2 24
6.3.2.3 Interrogation in FE2 24
6.3.3.3 Procedures for CC to which FE2 is collocated 24
6.3.3.4 Procedures for FE3 25
6.3.3.5 Procedures for FE4 25
6.3.3.6 Procedures for FE5 25

iTeh STANDARD PREVIEW
(standards.iteh.ai)
SIST EN 300 392-12-19 V1.1.1:2003
https://standards.iteh.ai/catalog/standards/sist/22d82f68-b620-4c43-939f-90160be66d21/sist-en-300-392-12-19-v1-1-1-2003

SIST EN 300 392-12-19 V1.1.1:2003

6.4 PDU Descriptions 25
6.4.1 DEFINE 26
6.4.2 DEFINE-ACK 26
6.4.3 INFORM-USER 27
6.4.4 INFORM-USER-ACK 27
6.4.5 INTERROGATE 28
6.4.6 INTERROGATE-ACK 28
6.4.7 CALL-BARRED 29
6.4.8 Element coding 29
6.4.8.1 Action type 29
6.4.8.2 Address string 29
6.4.8.3 Definition result 30
6.4.8.4 Definition type 30
6.4.8.5 Digit 30
6.4.8.6 Distribution result 31
6.4.8.7 Exception to address string 31
6.4.8.8 Interrogation result 31
6.4.8.9 Length of address string 31
6.4.8.10 Number of address strings 32
6.4.8.11 Number of exceptions to address strings 32
6.4.8.12 Number of service(s) 32
6.4.8.13 Number of subscriber identities 32
6.4.8.14 Rejection cause 33
6.4.8.15 Service 33
6.4.8.16 Service type 34
6.4.8.17 Subscriber identity 34

7 SS-BIC FE behaviour 34
7.1 Behaviour of FE1 35
7.1.1 Service interaction for FE1 35
7.1.2 Process description for FE1 36
7.2 Behaviour of FE2 37
7.2.1 Service interaction for FE2 37
7.2.2 Process description for FE2 38
7.3 Behaviour of CC to which FE2 is collocated 40
7.3.1 Service interaction for CC to which FE2 is collocated 40
7.3.2 Process description for CC to which FE2 is collocated 41
7.4 Behaviour of FE3 42
7.4.1 Service interaction for FE3 42
7.4.2 Process description for FE3 43
7.5 Behaviour of FE4 44
7.5.1 Service interaction for FE4 44
7.5.2 Process description for FE4 45
7.6 Behaviour of FE5 46
7.6.1 Service interaction for FE5 46
7.6.2 Process description for FE5 47
7.7 Behaviour of CCA to which FE5 is collocated 48
7.7.1 Service interaction for CCA to which FE5 is collocated 48
7.7.2 Process description for CCA collocated to FE5 49

History 50

iTeh STANDARD PREVIEW
(standards.iteh.ai)
SIST EN 300 392-12-19 V1.1.1:2003
https://standards.iteh.ai/catalog/standards/sist/22d82f68-b620-4c43-939f-9d160ba66d91/sist-en-300-392-12-19-v1-1-1-2003

SIST EN 300 392-12-19 V1.1.1:2003

Foreword

This draft European Telecommunication Standard (ETS) has been produced by the Radio Equipment and Systems (RES) Technical Committee of the European Telecommunications Standards Institute (ETSI), and is now submitted for the Public Enquiry phase of the ETSI standards approval procedure.

This ETS is a multi-part standard and will consist of the following parts:

Part 1: "General network design".

Part 2: "Air Interface (AI)".

Part 3: "Inter-working", (DE/RES-06001-3).

Part 4: "Gateways", (DE/RES-06001-4).

Part 5: "Terminal equipment interface", (DE/RES-06001-5).

Part 6: "Line connected stations", (DE/RES-06001-6).

Part 7: "Security".

Part 8: "Management services", (DE/RES-06001-8).

Part 10: "Supplementary Services (SS) Stage 1".

Part 11: "Supplementary Services (SS) Stage 2".

iTeh STANDARD PREVIEW
(standards.iteh.ai)

Part 12: "Supplementary Services (SS) Stage 3".

Part 13: "SDL Model of the Air Interface".

SIST EN 300 392-12-19 V1.1.1:2003
https://standards.iteh.ai/catalog/standards/sist/22d82f68-b620-4c43-939f-90160ba66d91/sist-en-300-392-12-19-v1-1-1-2003

Part 14: "PICS Proforma".

Proposed transposition dates	
Date of latest announcement of this ETS (doa):	3 months after ETSI publication
Date of latest publication of new National Standard or endorsement of this ETS (dop/e):	6 months after doa
Date of withdrawal of any conflicting National Standard (dow):	6 months after doa

SIST EN 300 392-12-19 V1.1.1:2003

Blank page

iTeh STANDARD PREVIEW
(standards.iteh.ai)
SIST EN 300 392-12-19 V1.1.1:2003
https://standards.iteh.ai/catalog/standards/sist/22d82f68-b620-4c43-939f-90160ba66d91/sist-en-300-392-12-19-v1-1-1-2003

SIST EN 300 392-12-19 V1.1.1:2003

1 Scope

This European Telecommunication Standard (ETS) defines the stage 3 specification of the Barring of Incoming Call (BIC) supplementary service for the Trans-European Trunked Radio (TETRA).

SS-BIC supplementary service enables barring restrictions for incoming services, e.g. calls, to be set. SS-BIC specifies the definition, interrogation and operation of the supplementary service. The Switching and Management Infrastructure (SwMI) applies the SS-BIC definitions when an incoming service is requested for the restricted user. The SS-BIC actions are defined for the SwMI, for the Mobile Station (MS) and for the Line Station (LS). The SS-BIC information flows may be delivered over the Inter System Interface (ISI).

SS-BIC is invoked for incoming services within one TETRA system or for services that extend over ISI to several TETRA systems.

Man-Machine Interface (MMI) and charging principles are outside the scope of this ETS.

Supplementary service stage 3 specification is preceded by the stage 1 and the stage 2 specifications of the service. Stage 1 describes the functional capabilities from the user's point of view. Stage 2 defines the functional behaviour in terms of functional entities and information flows. Stage 3 gives a precise description of the Supplementary Service from the implementational point of view. It defines the protocol for the service and the encoding rules for the information flows. It defines the processes for the functional entities and their behaviour. The described protocols and behaviour apply to the SwMI, for the MS and for the LS and may be applied over the ISI between TETRA systems.

2 Normative references

iTeh STANDARD PREVIEW
(standards.iteh.ai)

This ETS incorporates, by dated or undated reference, provisions from other publications. These normative references are cited at the appropriate places in the text and the publications are listed hereafter. For dated references, subsequent amendments to or revisions of any of these publications apply to this ETS only when incorporated in it by amendment or revision. For undated references the latest edition of the publication referred to applies.

SIST EN 300 392-12-19 V1.1.1:2003
https://standards.iteh.ai/catalog/standards/sist/22d82f68-b620-4c43-939f-90160ba66d91/sist-en-300-392-12-19-v1-1-1-2003

[1] ETS 300 392-2: "Radio Equipment and Systems (RES); Trans-European Trunked Radio (TETRA); Voice plus Data (V+D); Part 2: Air Interface (AI)".

[2] ETS 300 392-1: "Radio Equipment and Systems (RES); Trans-European Trunked Radio (TETRA); Voice plus Data (V+D), Part 1: General Network Design".

[3] ETS 300 392-10-1: "Radio Equipment and Systems (RES); Trans-European Trunked Radio (TETRA); Voice plus Data (V+D); Part: 10: Supplementary services stage 1; Part 10-1: Call diversion".

[4] ETS 300 392-10-6: "Radio Equipment and Systems (RES); Trans-European Trunked Radio (TETRA); Voice plus Data (V+D); Part: 10: Supplementary services stage 1; Part 10-6: Call authorised by dispatcher".

[5] ITU-T Recommendation Z.100 (1993): "Specification and Description Language (SDL)".

3 Definitions and abbreviations

3.1 Definitions

For the purposes of this ETS, the following definitions apply:

affected user: Functional Entity 1 (FE1), the user on whose behalf the incoming services are barred. The SS-BIC is defined either for affected user's individual subscriber identity or for a group identity of which the affected user is member.

authorised user: FE3, the user who is permitted to define SS-BIC on affected user's behalf.

SIST EN 300 392-12-19 V1.1.1:2003

basic service: Circuit mode speech service or circuit mode data service, see ETS 300 392-2 [1] clause 11.

calling party: FE5, the party whose service request is barred due to SS-BIC.

Functional Entity (FE): An FE performs the SS-BIC specific tasks in the MS, in the LS or in the SwMI.

home system: The TETRA network which Mobile Network Identity (MNI) is equal to the user's MNI. The SS-BIC definition is saved in the home system and home system is responsible for transporting the SS-BIC definition to visited system(s).

Inter System Interface (ISI): The interface between two TETRA networks, that enables the inter-working of services between these two systems.

Mobile Network Identity (MNI): Mobile Country Code (MCC) and Mobile Network Code (MNC) of the TETRA Subscriber Identity (TSI).

Mobile Station (MS): A physical grouping that contains all of the mobile equipment that is used to obtain TETRA services. By definition, a mobile station contains at least one Mobile Radio Stack.

packet data service: Connection oriented packet mode data service and connectionless packet mode data service, see ETS 300 392-2 [1] clauses 24 and 26.

operation: The act of performing a service, e.g. in case of SS-BIC the barring of a call.

Switching and Management Infrastructure (SwMI): All of the TETRA equipment for a Voice plus Data (V+D) network except for subscriber terminals. The SwMI enables subscriber terminals to communicate with each other via the SwMI.

iTeh STANDARD PREVIEW
(standards.iteh.ai)

visited system: The TETRA network which MNI is not equal to the user's MNI.

3.2 Abbreviations

SIST EN 300 392-12-19 V1.1.1:2003
https://standards.iteh.ai/catalog/standards/sist/22d82f68-b620-4c43-939f-901b0ba66d91/sist-en-300-392-12-19-v1-1-1-2003

For the purposes of this ETS, the following abbreviations apply:

CC	Call Control sub-entity for SS-BIC in CMCE in SwMI
CCA	Call Control sub-entity for SS-BIC in CMCE in MS/LS
CMCE	Circuit Mode Control Entity
CONS	Connection Oriented Network Service
FE	Functional Entity
ISI	Inter System Interface
LS	Line Station
MCC	Mobile Country Code
MLE	Mobile Link Entity
MNC	Mobile Network Code
MS	Mobile Station
PDU	Protocol Data Unit
SAP	Service Access Point
SCLNS	Specific ConnectionLess Network Service
SS	Supplementary service sub-entity within CMCE
SS-BIC	Supplementary Service Barring of Incoming Call
SSI	Short Subscriber Identity
SwMI	Switching and Management Infrastructure
TETRA	Trans-European Trunked Radio
TNCC-SAP	Call Control service access point
TNCO-SAP	Connection Oriented network service Service Access Point
TNSCLNS-SAP	Specific ConnectionLess Network Service Service Access Point
TNSS-SAP	Supplementary Service Service Access Point
TSI	TETRA Subscriber Identity

SIST EN 300 392-12-19 V1.1.1:2003

4 SS-BIC stage 3 specification

4.1 Functional model description

The functional model shall comprise the following Functional Entities (FEs):

FE1: SS sub-entity in Circuit Mode Control Entity (CMCE) for SS-BIC in affected user's MS/LS;

FE2: SS sub-entity in CMCE for SS-BIC in SwMI;

FE3: SS sub-entity in CMCE for SS-BIC in authorised user's MS/LS;

FE4: generic SS sub-entity in CMCE for SS-BIC in SwMI;

FE5: SS sub-entity in CMCE for SS-BIC in calling party's MS/LS;

CC: call control sub-entity for SS-BIC in CMCE in SwMI;

CCA: call control sub-entity for SS-BIC in CMCE in MS/LS.

NOTE: The SS-BIC functionality in CC/CCA is also applicable for packet data service, unless otherwise mentioned.

The following relationships shall exist between these FEs:

ra between FE1 and FE2;

rb between FE2 and FE4 in different TETRA systems;

rc between FE2 and FE3;

rd between FE2 and FE2 in different TETRA systems;

re between FE1 and FE4;

rf between FE3 and FE4;

rg between FE2 and FE5.

iTeh STANDARD PREVIEW
(standards.iteh.ai)
SIST EN 300 392-12-19 V1.1.1:2003
https://standards.iteh.ai/catalog/standards/sist/22d82f68-b620-4c43-939f-90160ba66d91/sist-en-300-392-12-19-v1-1-1-2003

Figures 1 and 2 show these FEs and their relationships. Figure 1 gives the functional model for the management part and figure 2 gives the functional model for the operational part.

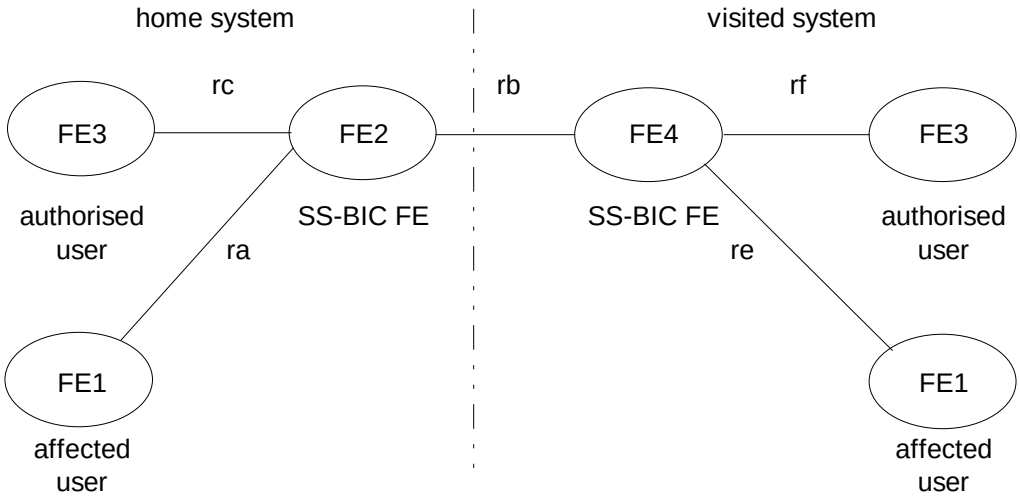

Figure 1: Functional model for the management part

SIST EN 300 392-12-19 V1.1.1:2003

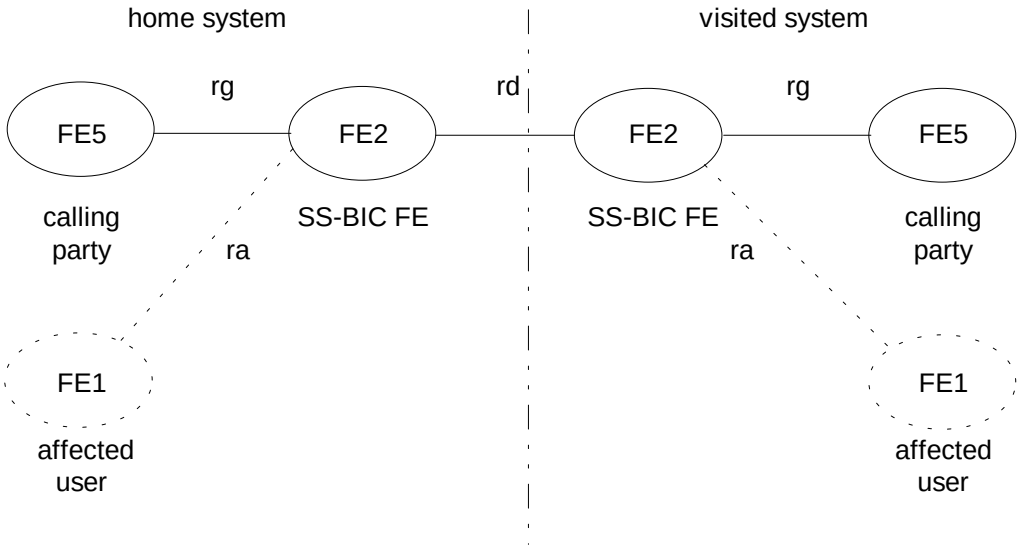

NOTE: FE1 does not receive any information of the barring.

Figure 2: Functional model for the operational part

4.2 Relationship with a basic and packet data service

FE2 shall be collocated to CC in SwMI.

FE5 shall be collocated to CCA.

The relationship with basic and packet data service is shown in figure 3.

iTeh STANDARD PREVIEW
(standards.iteh.ai)
SIST EN 300 392-12-19 V1.1.1:2003
https://standards.iteh.ai/catalog/standards/sist/22d82f68-b620-4c43-939f-90160ba66d91/sist-en-300-392-12-19-v1-1-1-2003

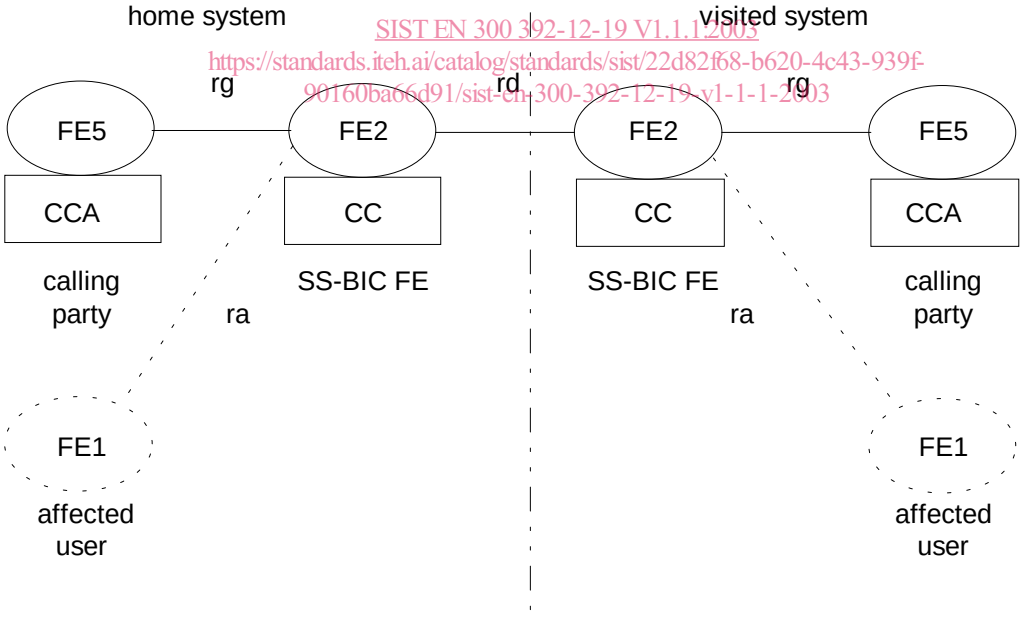

NOTE: FE1 does not receive any information of the barring.

Figure 3: Relationships with FEs and CCs/CCAs

SIST EN 300 392-12-19 V1.1.1:2003

5 SS-BIC service description

5.1 General

This clause describes SS-BIC services offered by Supplementary Service (SS) and call control sub-entities of CMCE, Connection Oriented Network Service (CONS) and Specific ConnectionLess Network Service (SCLNS) of the TETRA voice plus data layer 3 service boundary in the MS/LS.

NOTE: The layer 3 services and service boundary for the SwMI is outside the scope of this ETS.

The SS-BIC services shall be offered at:

- Supplementary Services Service Access Point (TNSS-SAP);
- Call Control Service Access Point (TNCC-SAP);
- Connection Oriented network service Service Access Point (TNCO-SAP);
- Specific ConnectionLess Network Service Service Access Point (TNSCLNS-SAP).

The SS-BIC services described in this clause shall complement the SS service, the call control service, CONS and SCLNS specified in ETS 300 392-2 [1], clauses 12, 11, 24 and 26 respectively.

5.2 Offered services

SS-BIC is an optional supplementary service for TETRA voice plus data layer 3. If SS-BIC is supported, this subclause shall specify the services and their availability.

iTeh STANDARD PREVIEW
(standards.iteh.ai)

The following SS-BIC services shall be provided:

- barring indication: barring indication for a basic service (call control service) or packet data service (CONS, SCLNS) that the user has requested.

SIST EN 300 392-12-19 V1.1.1:2003
https://standards.iteh.ai/catalog/standards/sist/22d82f68-b620-4c43-939f-90160ba66d91/sist-en-300-392-12-19-v1-1-1-2003

The following SS-BIC services may be provided:

- definition: a request to define SS-BIC into the SwMI;
- definition information: the reception of SS-BIC definition for information;
- interrogation: interrogation of SS-BIC definition.

5.3 TNSS-SAP

The SS-BIC definition, user definition and interrogation shall be provided at TNSS-SAP.

The SS-BIC service elements shall be carried as primitives within the following three general generic supplementary services primitives over TNSS-SAP:

a) TNSS-SERVICE;

b) TNSS-INFO;

c) TNSS-ERROR.

Figure 4 illustrates the flow for generic SS primitives.

SIST EN 300 392-12-19 V1.1.1:2003

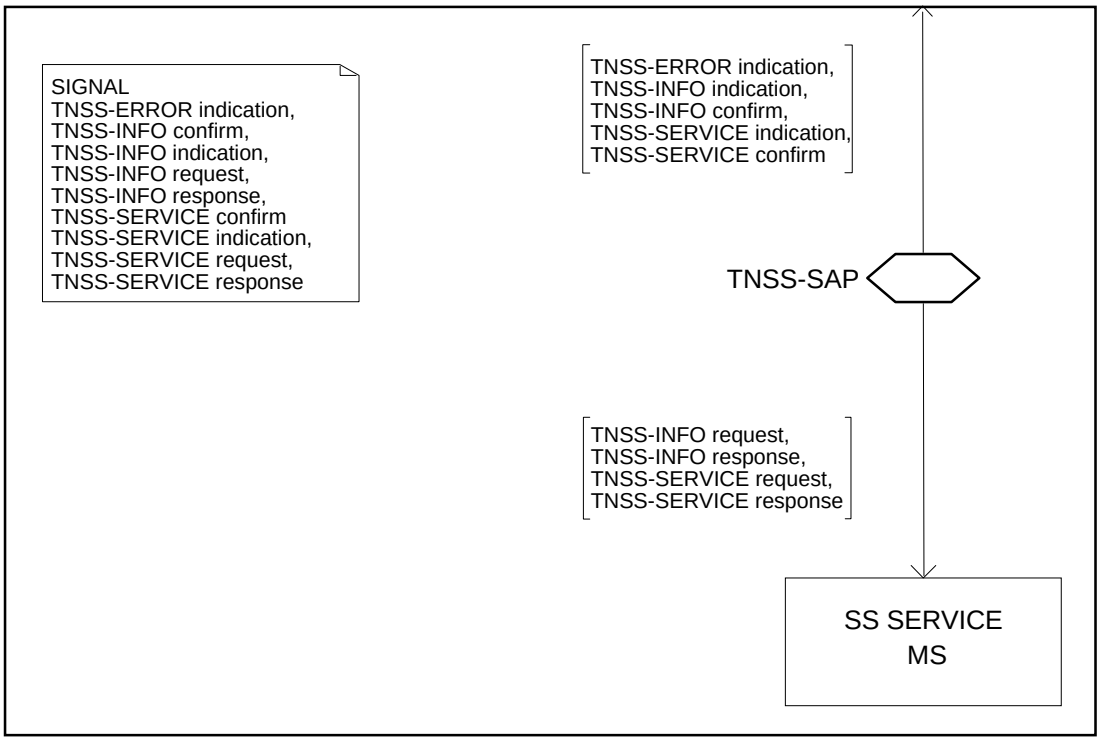

Figure 4: The flow for generic SS primitives

TNSS-SERVICE shall enable an invoking entity to request and to be informed about, an operation to be performed by the performing entity.

iTeh STANDARD PREVIEW
(standards.iteh.ai)

TNSS-INFO shall enable an entity to be informed of ongoing transactions.

TNSS-ERROR shall enable a performing entity to return the negative reply of a unsuccessfully performed operation to the invoking entity.

SIST EN 300 392-12-19 V1.1.1:2003
https://standards.iteh.ai/catalog/standards/sist/22d82f68-b620-4c43-939f-90160ba66d91/sist-en-300-392-12-19-v1-1-1-2003

For a detailed description of the generic supplementary service primitives refer to ETS 300 392-2 [1], subclause 12.3.

5.4 TNCC-SAP

The SS-BIC barring indication for call control service shall be provided at TNCC-SAP.

The SS-BIC service element shall be carried as an element within the TNCC-RELEASE indication primitive over TNCC-SAP. The barring shall be indicated in TNCC-RELEASE primitive as Disconnect cause parameter having the value Not allowed traffic case.

For a detailed description of the call control service primitives refer to ETS 300 392-2 [1], subclause 11.3.

5.5 TNSCLNS-SAP

The SS-BIC barring indication for SCLNS shall be provided at TNSCLNS-SAP.

The SS-BIC barring indication shall be carried within the TN-DELIVERY indication at TNSCLNS-SAP. The parameter Disposition Report shall be mapped from Disposition element within DELIVERY PDU to TN-DELIVERY indication, as defined in ETS 300 392-2 [1], clause 26.

5.6 TNCO-SAP

The SS-BIC barring indication for CONS shall be provided at TNCO-SAP.

SIST EN 300 392-12-19 V1.1.1:2003

The SS-BIC service elements shall be carried within the N-DISCONNECT indication primitives over TNCO-SAP. The barring shall be indicated by mapping the Clearing cause and Diagnostic code from CLEAR INDICATION packet to N-DISCONNECT indication, as defined in ETS 300 392-2 [1], clause 24.

5.7 SS-BIC services offered over the TNSS-SAP

5.7.1 SS-BIC primitives

The generic supplementary service primitives shall contain the following SS-BIC primitives.

a) DEFINE request;

b) DEFINE confirm;

c) INFORM-USER indication;

d) INFORM-USER response;

e) INTERROGATE request;

f) INTERROGATE confirm;

g) CALL-BARRED indication.

The information contained in the following primitive description tables correspond to the following key:

- Remark: comment;
- C: conditional;
- O: optional;
- M: mandatory.

iTeh STANDARD PREVIEW
(standards.iteh.ai)

5.7.2 DEFINE request

SIST EN 300 392-12-19 V1.1.1:2003
https://standards.iteh.ai/catalog/standards/sist/3b2d8bc2-1f0c-4e3d-8f36-a12-19-v1-1-1-2003

DEFINE request shall be offered from application to FE3 to define SS-BIC on affected user's behalf. The primitive shall contain the parameters listed in table 1.

Parameter definitions:

- Subscriber identity defines the restricted identity. If there are several subscriber identities given in the primitive, the following definitions shall be requested to all the identities.

- Definition type indicates if the definition shall be an addition, replacement of removal of a previously made definition.

  NOTE: It is possible that there is no previous SS-BIC definition.

- Services outside closed user group causes barring of service requests received from a party outside the given closed group. The closed user group definition is outside the scope of this ETS.

- Service causes barring of the given service.

- Address string causes barring of a service requested by a user whose identity is or starts with the given string.

- Exception to address string allows services requested by a user whose identity is or starts with the given string. The shall be used to enable exceptions to restricting Address string definitions and the overrides these definitions, when the Exception to address string is longer than a Address string element.

- Delivery to affected user(s) indicates that the SwMI shall send the definition to affected user for his information. If the definition is made to a group, the definition shall be sent to all group members for information, if sent.