International Standard 6265

INTERNATIONAL ORGANIZATION FOR STANDARDIZATION•МЕЖДУНАРОДНАЯ ОРГАНИЗАЦИЯ ПО СТАНДАРТИЗАЦИИ•ORGANISATION INTERNATIONALE DE NORMALISATION

Alpine skis — Determination of deformation load and breaking load

Skis alpins — Détermination de la charge de déformation et de la charge de rupture

First edition — 1980-03-01

iTeh STANDARD PREVIEW
(standards.iteh.ai)

ISO 6265:1980
https://standards.iteh.ai/catalog/standards/sist/844bcb5e-cf52-4b2a-8954-2f9b15ba7e94/iso-6265-1980

UDC 685.363.2 : 620.174.2 **Ref. No. ISO 6265-1980 (E)**

Descriptors : sport equipment, alpine skis, tests, mechanical tests, mechanical strength, deformation, loads, breaking loads, test equipment.

Price based on 3 pages

Foreword

ISO (the International Organization for Standardization) is a worldwide federation of national standards institutes (ISO member bodies). The work of developing International Standards is carried out through ISO technical committees. Every member body interested in a subject for which a technical committee has been set up has the right to be represented on that committee. International organizations, governmental and non-governmental, in liaison with ISO, also take part in the work.

Draft International Standards adopted by the technical committees are circulated to the member bodies for approval before their acceptance as International Standards by the ISO Council.

International Standard ISO 6265 was developed by Technical Committee ISO/TC 83, *Sports and recreational equipment*, and was circulated to the member bodies in March 1979.

iTeh STANDARD PREVIEW
(standards.iteh.ai)

It has been approved by the member bodies of the following countries :

ISO 6265:1980
https://standards.iteh.ai/catalog/standards/sist/844bcb5e-cf52-4b2a-8954-2f9b15ba7e94/iso-6265-1980

Austria	India	South Africa, Rep. of
China	Italy	Switzerland
Czechoslovakia	New Zealand	USA
France	Poland	USSR
Germany, F. R.	Romania	

No member body expressed disapproval of the document.

© **International Organization for Standardization, 1980** •

Printed in Switzerland

Alpine skis — Determination of deformation load and breaking load

1 Scope and field of application

This International Standard specifies a method for determination of the resistance of alpine skis to permanent deformation and breaking.

It is applicable to all sizes of alpine skis for adults, juveniles and children.

2 Reference

ISO 868, *Plastics — Determination of indentation hardness by means of a durometer (Shore hardness)*.

3 Definitions

For the purpose of this International Standard the following definitions apply :

3.1 deformation load, F_D : The load which, when applied at the load application point, causes a permanent deformation of 1 mm of the ski between the supports.

3.2 breaking load, F_B : The maximum load which, when applied at the load application point, causes failure of the ski (breaking, delamination, buckling, etc.).

iTeh STANDARD PREVIEW
(standards.iteh.ai)
ISO 6265:1980
https://standards.iteh.ai/catalog/standards/sist/84f8cb5e-d32-4b2a-8954-2f9b15ba7e94/iso-6265-1980

4 Testing machine

The general arrangement of the bending testing machine is shown in figure 1.

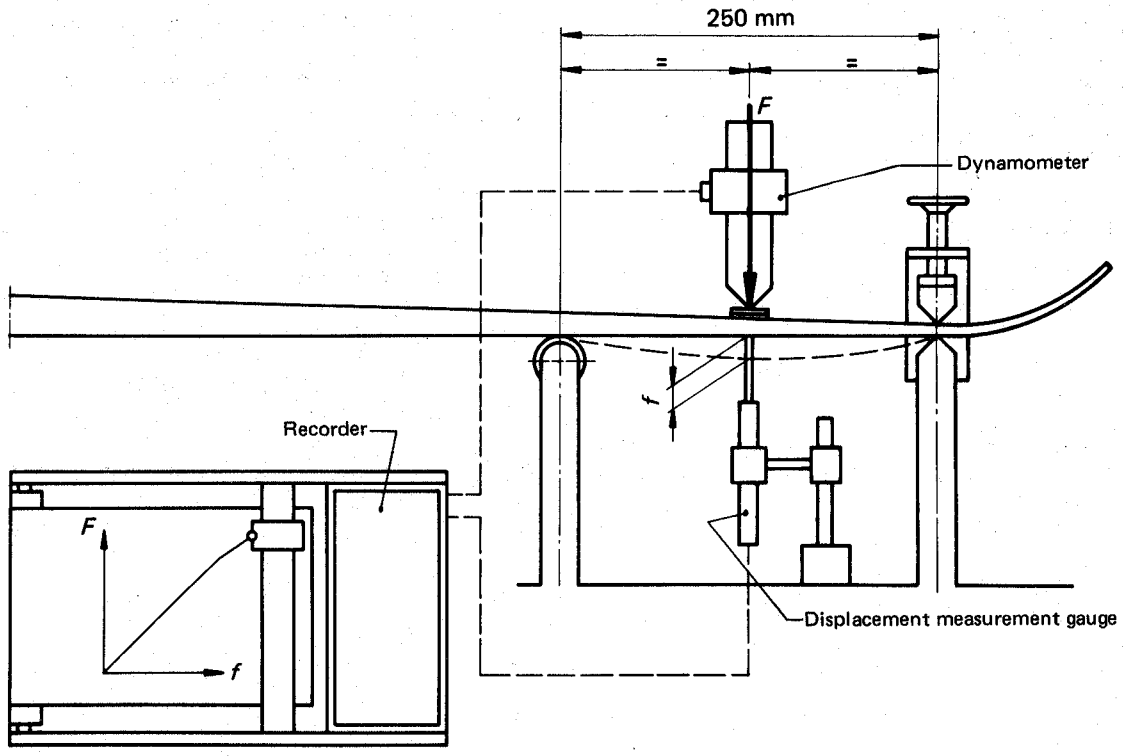

Figure 1 — Testing machine

The bending testing machine (universal tension and compression testing machine with bending fixture) shall comprise

a) two specimen supports, at least 250 mm apart, at least one of which shall be a low friction roller;

b) a dynamometer, having a range of at least 20 000 N, for measurement of the load, F;

c) a displacement measurement gauge for measurement of the deflection, f.

The load shall be applied to the ski via a ram plate (see figure 2), which shall consist of a steel plate, 4 mm thick, and a hard rubber layer, 3 mm thick and having a Shore A hardness of 95 ± 5 (see ISO 868).

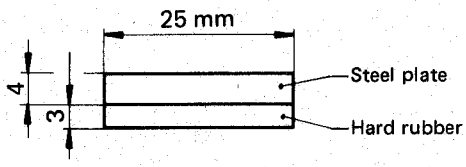

Figure 2 — Ram plate

Measurement data shall be recorded by means of a load-displacement recorder (see figure 3).

iTeh STANDARD PREVIEW
(standards.iteh.ai)

5 Determination of load application point

In order to obtain comparable values, the test shall be carried out at that point on the ski forebody which has a bending stiffness of 300 N/mm ± 3 % and with a separation between the supports of 250 ± 0,5 mm.

ISO 6265:1980
https://standards.iteh.ai/catalog/standards/sist/844bcb5e-cf52-4b2a-8954-29b15ba7e94/iso-6265-1980

Determine the load-application-point by moving the ski in a longitudinal direction on the supports until a deflection of 2,0 ± 0,03 mm is obtained under a load of 600 ± 5 N.

6 Conditioning

Condition the ski at a temperature of 23 ± 5 °C.

7 Test procedure

Insert the ski in the testing machine and fix it on the supports in such a way that the load application point is located midway between the supports.

NOTES

1 It is important that the stiffness of the ski at the load application point lies within the tolerance range of ± 3 %.

2 Testing at positions other than the load application point will result in false values for the deformation load and the breaking load.

Load the ski at a rate sufficient to increase the deflection by 25 mm/min, until the ski breaks.

Record the load-deflection values by means of the load-displacement recorder.

8 Evaluation

Determine the deformation load and the breaking load from the load-deflection chart as follows.

8.1 Deformation load

From the point on the abscissa corresponding to a 1 mm deflection, draw a straight line parallel to the linear portion of the load-deflection curve. The value of the deformation load, F_D, is given by the point of intersection of this line with the curve (see figure 3).

8.2 Breaking load

The breaking load, F_B, is the maximum load measured during the test, i.e. the maxima of the curve.

9 Test report

The test report shall include the following information :

a) the reference to this International Standard, i.e. ISO 6265;

b) the brand of ski tested;

c) the designation of the model;

d) the nominal length;

e) the manufacturer's registration number;

f) the load-deflection chart together with the deformation and breaking loads;

g) any deviation from the standard procedure and the reasons therefore.

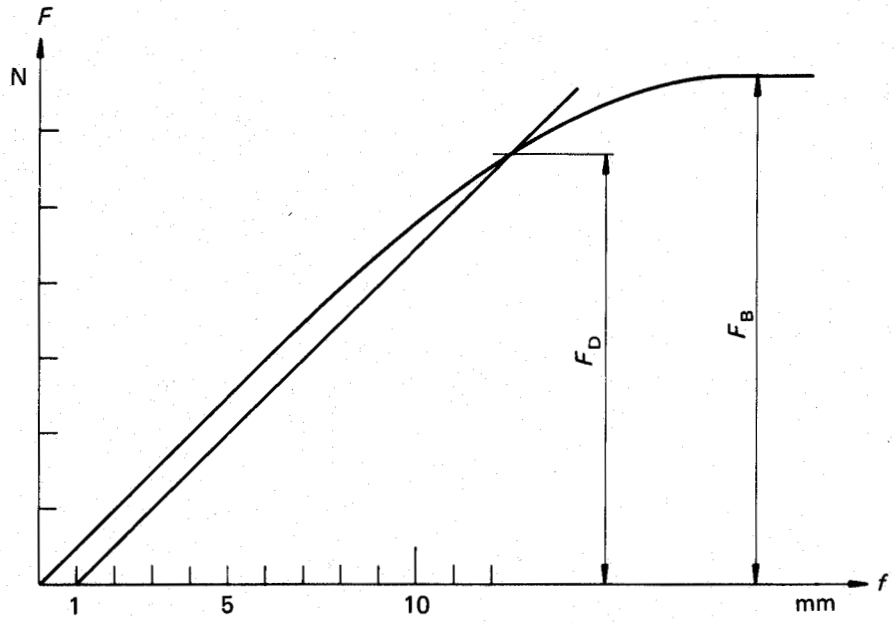

Figure 3 — Typical load-deflection curve and method of evaluation

iTeh STANDARD PREVIEW
(standards.iteh.ai)
ISO 6265:1980
https://standards.iteh.ai/catalog/standards/sist/844bcb5e-cf52-4b2a-8954-2f9b15ba7e94/iso-6265-1980

iTeh STANDARD PREVIEW
(standards.iteh.ai)

ISO 6265:1980
https://standards.iteh.ai/catalog/standards/sist/844bcb5e-cf52-4b2a-8954-2f9b15ba7e94/iso-6265-1980

iTeh STANDARD PREVIEW
(standards.iteh.ai)

ISO 6265:1980
https://standards.iteh.ai/catalog/standards/sist/844bcb5e-cf52-4b2a-8954-2f9b15ba7e94/iso-6265-1980

iTeh STANDARD PREVIEW
(standards.iteh.ai)

ISO 6265:1980
https://standards.iteh.ai/catalog/standards/sist/844bcb5e-cf52-4b2a-8954-2f9b15ba7e94/iso-6265-1980