International Standard ISO 6278

INTERNATIONAL ORGANIZATION FOR STANDARDIZATION•МЕЖДУНАРОДНАЯ ОРГАНИЗАЦИЯ ПО СТАНДАРТИЗАЦИИ•ORGANISATION INTERNATIONALE DE NORMALISATION

iTeh STANDARD PREVIEW
(standards.iteh.ai)
ISO 6278:1980
https://standards.iteh.ai/catalog/standards/sist/83de6ce4-0813-4b43-9a4d-5ac39175c513/iso-6278-1980

Needle roller bearings — Track rollers — Boundary dimensions

Roulements à aiguilles — Galets de came — Dimensions d'encombrement

First edition — 1980-03-01

UDC 621.822.8 **Ref. No. ISO 6278-1980 (E)**

Descriptors : needle bearings, roller bearings, dimensions, symbols.

Price based on 4 pages

Foreword

ISO (the International Organization for Standardization) is a worldwide federation of national standards institutes (ISO member bodies). The work of developing International Standards is carried out through ISO technical committees. Every member body interested in a subject for which a technical committee has been set up has the right to be represented on that committee. International organizations, governmental and non-governmental, in liaison with ISO, also take part in the work.

Draft International Standards adopted by the technical committees are circulated to the member bodies for approval before their acceptance as International Standards by the ISO Council.

iTeh STANDARD PREVIEW
(standards.iteh.ai)

International Standard ISO 6278 was developed by Technical Committee ISO/TC 4, *Rolling bearings*, and was circulated to the member bodies in August 1978.

It has been approved by the member bodies of the following countries :

ISO 6278:1980
https://standards.iteh.ai/catalog/standards/sist/85dc0ec4-0813-4b43-9a4d-5ac3917ac913/iso-6278-1980

Australia	Germany, F. R.	South Africa, Rep. of
Austria	Hungary	Spain
Belgium	India	Sweden
Bulgaria	Italy	Switzerland
Canada	Japan	United Kingdom
Chile	Korea, Rep. of	USA
China	Mexico	USSR
Czechoslovakia	Netherlands	Yugoslavia
France	Romania	

No member body expressed disapproval of the document.

© International Organization for Standardization, 1980 •

Printed in Switzerland

Needle roller bearings — Track rollers — Boundary dimensions

1 Scope and field of application

This International Standard specifies the boundary dimensions of needle roller bearing track rollers, yoke and stud type.

2 Symbols

B = overall width of inner ring with end washers

B_1 = total length of stud type roller

B_2 = stud length

B_3 = location of radial lubrication hole

C = outer ring width

C_1 = stud washer stand out

d = inner ring bore diameter

d_1 = stud diameter

D = outside diameter of roller

G = stud thread

G_1 = length of stud thread

r = outer ring chamfer dimension, radial and axial

$r_{s\,min}$ = outer ring smallest permissible single chamfer dimension, radial and axial

r_1 = inner ring chamfer dimension, radial and axial

$r_{1s\,min}$ = inner ring smallest permissible single chamfer dimension, radial and axial

iTeh STANDARD PREVIEW
(standards.iteh.ai)
ISO 6278:1980
https://standards.iteh.ai/catalog/standards/sist/83de6ce4-0813-4b13-9a42-5ac39175c513/iso-6278-1980

3 Boundary dimensions

3.1 Track rollers — yoke type

NOTE — The track rollers may be made with or without a cage.

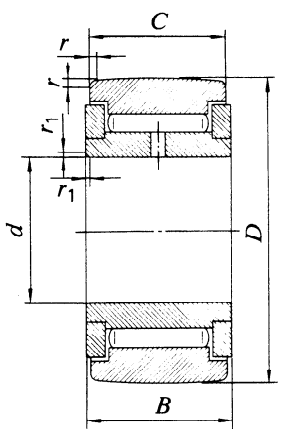

Figure 1 — Track roller — Yoke type — Light and heavy series

Table 1 — Track rollers — Yoke type — Light series

Dimensions in millimetres

d	D[1]	C	B	$r_{s\,min}$[2]	$r_{1s\,min}$[2]
5	16	11	12	0,3	0,3
6	19	11	12	0,3	0,3
8	24	14	15	0,3	0,3
10	30	14	15	0,6	0,3
12	32	14	15	0,6	0,3
15	35	18	19	0,6	0,3
17	40	20	21	1	0,3
20	47	24	25	1	0,3
25	52	24	25	1	0,3
30	62	28	29	1	0,3
35	72	28	29	1	0,6
40	80	30	32	1	0,6
45	85	30	32	1	0,6
50	90	30	32	1	0,6
55	100	34	36	1,5	0,6
60	110	34	36	1,5	0,6
65	120	40	42	1,5	0,6
70	125	40	42	1,5	0,6
75	130	40	42	1,5	0,6
80	140	46	48	2	1
85	150	46	48	2	1
90	160	52	54	2	1
95	170	52	54	2	1
100	180	63	65	2	1,5
110	200	63	65	2	1,5
120	215	63	65	2	1,5

iTeh STANDARD PREVIEW
(standards.iteh.ai)
ISO 6278:1980
https://standards.iteh.ai/catalog/standards/sist/85dc0ce4-0813-4b43-9a4d-5f1a2b2b2b2b/iso-6278-1980

1) The outside surface may be cylindrical or crowned.

2) No maximum limit is laid down for chamfer dimensions r and r_1.

Table 2 — Track rollers — Yoke type — Heavy series

Dimensions in millimetres

d	D[1]	C	B	$r_{s\,min}$[2]	$r_{1s\,min}$[2]
10	32	17	18	0,6	0,3
12	37	20	21	1	0,3
15	42	22	24	1	0,3
17	47	25	27	1	0,3
20	58	32	34	1	0,3
25	72	38	40	1	0,3
30	85	46	48	1,5	0,3
35	100	54	56	1,5	0,6
40	110	61	63	2	0,6
45	125	69	71	2	0,6
50	140	76	80	2,5	0,6
60	160	86	90	2,5	0,6
70	190	99	103	2,5	0,6
80	210	111	115	2,5	1
90	240	128	132	3	1

1) The outside surface may be cylindrical or crowned.

2) No maximum limit is laid down for chamfer dimensions r and r_1.

3.2 Track rollers — stud type

NOTE — The track rollers may be manufactured with or without a cage. The provision of an axial hole for lubrication purposes in the threaded end of the stud is optional. A radial hole in the stud shank is also optional, but where such provision is made for lubrication purposes dimension B_3 applies. Lubrication hole diameters are not specified.

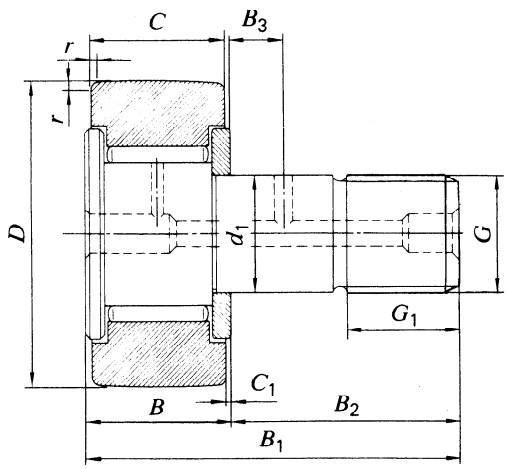

Figure 2 — Track roller — Stud type — Light and heavy series

iTeh STANDARD PREVIEW
(standards.iteh.ai)

Table 3 — Track rollers — Stud type — Light series

ISO 6278:1980
https://standards.iteh.ai/catalog/standards/sist/83de6ce4-0813-4b43-9a4d-5ac39175c513/iso-6278-1980

Dimensions in millimetres

D 1)	C	d_1	G	G_1	B_{max}	$B_{1\,max}$	B_2	B_3	C_1	$r_{s\,min}$ 2)
13	9	5	M 5 × 0,8	7	10	23	13	—	0,5	0,3
16	11	6	M 6 × 1	8	12,2	28,2	16	—	0,6	0,3
19	11	8	M 8 × 1,25	10	12,2	32,2	20	—	0,6	0,3
22	12	10	M 10 × 1,25	12	13,2	36,2	23	—	0,6	0,3
26	12	10	M 10 × 1,25	12	13,2	36,2	23	—	0,6	0,3
30	14	12	M 12 × 1,5	13	15,2	40,2	25	6	0,6	0,6
32	14	12	M 12 × 1,5	13	15,2	40,2	25	6	0,6	0,6
35	18	16	M 16 × 1,5	17	19,6	52,1	32,5	8	0,8	0,6
40	20	18	M 18 × 1,5	19	21,6	58,1	36,5	8	0,8	1
47	24	20	M 20 × 1,5	21	25,6	66,1	40,5	9	0,8	1
52	24	20	M 20 × 1,5	21	25,6	66,1	40,5	9	0,8	1
62	29	24	M 24 × 1,5	25	30,6	80,1	49,5	11	0,8	1
72	29	24	M 24 × 1,5	25	30,6	80,1	49,5	11	0,8	1
80	35	30	M 30 × 1,5	32	37	100	63	15	1	1
85	35	30	M 30 × 1,5	32	37	100	63	15	1	1
90	35	30	M 30 × 1,5	32	37	100	63	15	1	1

1) The outside surface may be cylindrical or crowned.

2) No maximum limit is laid down for chamfer dimension r.

Table 4 — Track rollers — Stud type — Heavy series

Dimensions in millimetres

D[1]	C	d_1	G	G_1	B_{max}	$B_{1\ max}$	B_2	B_3	C_1	$r_{s\ min}$[2]
13	9	6	M 6 × 1	8	10	25	15	—	0,5	0,3
16	11	8	M 8 × 1,25	10	12	31	19	—	0,5	0,3
19	11	10	M 10 × 1,25	12	12	34	22	—	0,5	0,3
24	14	12	M 12 × 1,5	14	15	41	26	—	0,5	0,3
32	17	14	M 14 × 1,5	16	18	48	30	7	0,5	0,6
37	20	16	M 16 × 1,5	18	21	56	35	8	0,5	1
42	22	20	M 20 × 1,5	21	24	65	41	10	1	1
47	25	24	M 24 × 1,5	25	27	75	48	11	1	1
58	32	30	M 30 × 1,5	30	34	93	59	14	1	1
72	38	36	M 36 × 3	41	40	116	76	17	1	1
85	46	42	M 42 × 3	46	48	135	87	20	1	1,5
100	54	48	M 48 × 3	53	56	156	100	23	1	1,5
110	61	56	M 56 × 4	61	63	178	115	—	1	2
125	69	64	M 64 × 4	68	71	200	129	—	1	2
140	76	72	M 72 × 4	73	79	222	143	—	2	2,5
160	86	80	M 80 × 4	80	89	246	157	—	2	2,5
190	99	80	M 80 × 4	80	102	262	160	—	2	2,5
210	111	90	M 90 × 4	88	114	292	178	—	2	2,5
240	128	100	M 100 × 4	96	131	328	197	—	2	3

1) The outside surface may be cylindrical or crowned.

2) No maximum limit is laid down for chamfer dimension r_s.

iTeh STANDARD PREVIEW
(standards.iteh.ai)

ISO 6278:1980
https://standards.iteh.ai/catalog/standards/sist/83de6ce4-0813-4b43-9a4d-5ac39175c513/iso-6278-1980

iTeh STANDARD PREVIEW
(standards.iteh.ai)
This page intentionally left blank

ISO 6278:1980
https://standards.iteh.ai/catalog/standards/sist/83de6ce4-0813-4b43-9a4d-5ac39175c513/iso-6278-1980

This page intentionally left blank

iTeh STANDARD PREVIEW
(standards.iteh.ai)
ISO 6278:1980
https://standards.iteh.ai/catalog/standards/sist/83de6ce4-0813-4b43-9a4d-5ac39175c513/iso-6278-1980