SLOVENSKI STANDARD
SIST EN 13331-1:2002

01-december-2002

Sistemi za razpiranje izkopov - 1. del: Specifikacija proizvoda

Trench lining systems - Part 1: Product specifications

Grabenverbaugeräte - Teil 1: Produktfestlegungen

Dispositifs de blindage de tranchées - Partie 1 : Spécifications du produit

Ta slovenski standard je istoveten z: EN 13331-1:2002

ICS:

93.020	Zemeljska dela. Izkopavanja. Gradnja temeljev. Dela pod zemljo	Earthworks. Excavations. Foundation construction. Underground works

SIST EN 13331-1:2002 **en**

EUROPEAN STANDARD

NORME EUROPÉENNE

EUROPÄISCHE NORM

EN 13331-1

August 2002

ICS 93.020

English version

Trench lining systems - Part 1: Product specifications

Dispositifs de blindage de tranchées - Partie 1: Spécification du produit

Grabenverbaugeräte - Teil 1: Produktfestlegungen

This European Standard was approved by CEN on 6 July 2002.

CEN members are bound to comply with the CEN/CENELEC Internal Regulations which stipulate the conditions for giving this European Standard the status of a national standard without any alteration. Up-to-date lists and bibliographical references concerning such national standards may be obtained on application to the Management Centre or to any CEN member.

This European Standard exists in three official versions (English, French, German). A version in any other language made by translation under the responsibility of a CEN member into its own language and notified to the Management Centre has the same status as the official versions.

CEN members are the national standards bodies of Austria, Belgium, Czech Republic, Denmark, Finland, France, Germany, Greece, Iceland, Ireland, Italy, Luxembourg, Malta, Netherlands, Norway, Portugal, Spain, Sweden, Switzerland and United Kingdom.

EUROPEAN COMMITTEE FOR STANDARDIZATION
COMITÉ EUROPÉEN DE NORMALISATION
EUROPÄISCHES KOMITEE FÜR NORMUNG

Management Centre: rue de Stassart, 36 B-1050 Brussels

Ref. No. EN 13331-1:2002 E

Contents

Foreword

This document (EN 13331-1:2002) has been prepared by Technical Committee CEN/TC 53 "Temporary works equipment", the secretariat of which is held by DIN.

This European Standard shall be given the status of a national standard, either by publication of an identical text or by endorsement, at the latest by February 2003, and conflicting national standards shall be withdrawn at the latest by February 2003.

According to the CEN/CENELEC Internal Regulations, the national standards organizations of the following countries are bound to implement this European Standard: Austria, Belgium, Czech Republic, Denmark, Finland, France, Germany, Greece, Iceland, Ireland, Italy, Luxembourg, Malta, Netherlands, Norway, Portugal, Spain, Sweden, Switzerland and the United Kingdom.

EN 13331, *Trench lining systems* consists of the following parts:

Part 1: Product specifications.

Part 2: Assessment by calculation or test.

These standards are to be read in conjunction with prEN 12811-2 and prEN 12811-3 *Temporary works equipment-Scaffolds*.

Introduction

Trench lining systems are intended to ensure the stability of vertical trench walls and to protect workers from the effects of collapse of the trenches.

Part 1 of the series deals with materials and specifications for the manufacture of trench lining systems.

Part 2 of the series deals with the evaluation methods using both calculations and tests for trench lining systems.

A trench lining system comprises a variety of components, which, when assembled, create trench support. The instruction manual provides all the necessary information on the designation and safe use of trench lining systems.

1 Scope

This European Standard specifies requirements for metallic trench lining systems assembled completely from purpose made prefabricated components. It includes material, constructional and structural requirements.

Partial safety factors for design refer to annex A.

2 Normative references

This European Standard incorporates by dated or undated reference, provisions from other publications. These normative references are cited at the appropriate places in the text, and the publications are listed hereafter. For dated references, subsequent amendments to or revisions of any of these publications apply to this European Standard only when incorporated in it by amendment or revision. For undated references the latest edition of the publication referred to applies (including amendments).

EN 10002-1, *Metallic materials - Tensile testing - Part 1: Method of test at ambient temperature.*

prEN 12811-2, *Temporary works equipment - Scaffolds - Part 2: Information on materials.*

EN ISO 898-1:1999, *Mechanical properties of fasteners made of carbon steel and alloy steel - Part 1: Bolts, screws and studs (ISO 898-1:1999)*

EN 13331-2, *Trench lining systems – Part 2: Assessment by calculation or test.*

ENV 1090-1, *Execution of steel structures – Part 1: General rules and rules for buildings.*

ENV 1999-1-1, *Eurocode 9: Design of aluminium structures – Part 1-1: General rules – General rules and rules for buildings.*

3 Terms and definitions

For the purposes of this European Standard, the following terms and definitions apply.

3.1
trench lining system
assembly of prefabricated components intended for the support of the vertical faces of trenches

NOTE Main load-bearing components are panels, slide rails and supporting components.

3.2
types of trench lining system

3.2.1
centre-supported trench lining system (CS type)
system in which pairs or panels are held apart by struts attached at the vertical centre line of the panels (see Figure 1)

3.2.2
edge-supported trench lining system (ES type)
system in which pairs of panels are held apart by struts attached at the vertical edges of the panels (see Figures 2 and 3)

3.2.3
slide rail trench lining system (R type), single (RS), double (RD) or triple (RT)
system in which panels can be moved up and down in single or multiple grooves of pairs of slide rails held apart by struts or supporting frames (see Figure 4)

3.2.4
drag box (DB type)
edge-supported trench lining system, intended to be dragged horizontally (see Figure 5)

NOTE The leading end has attachment points for pulling and can have cutting edges at the leading end and at the bottom. The clearance under the leading end struts can be different to that under the rear strut.

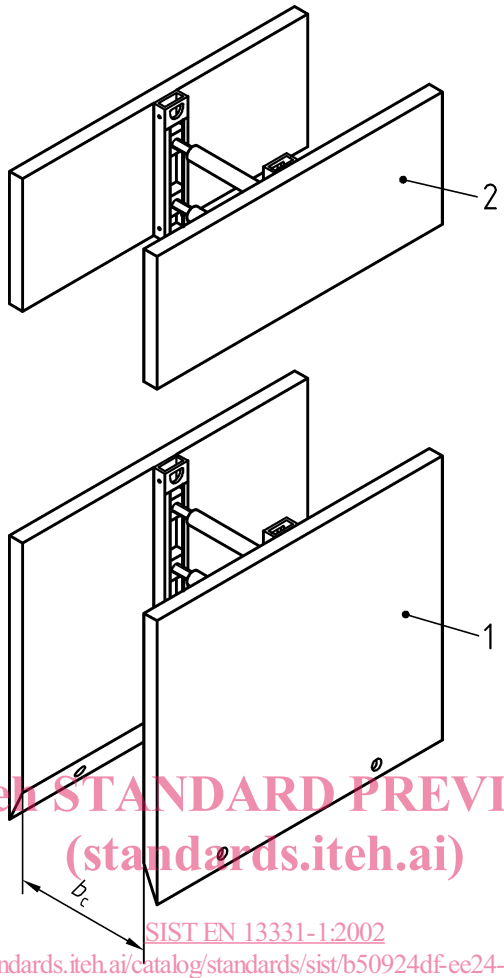

Key

1 Base assembly
2 Top assembly
b_c Internal trench lining width

Figure 1 — Example of a centre supported trench lining system (CS type) with struts with variable length adjustment (SV)

For the use of this equipment refer to 7.1.9.

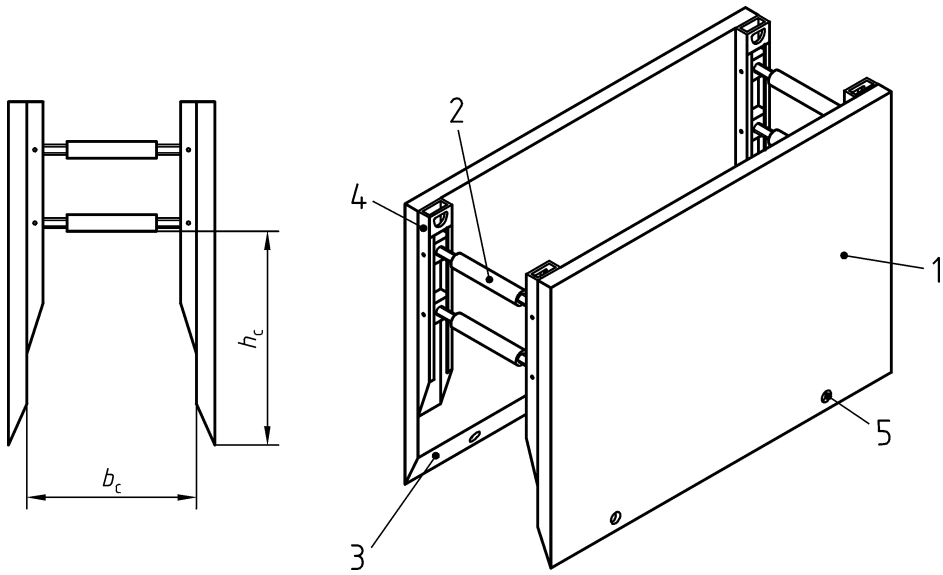

Keys

1 Panel
2 Strut with variable length adjustment
3 Cutting edge
4 Panel soldier
5 Handling point
b_c Internal trench lining width
h_c Bottom strut clearance

Figure 2 — Example of an edge-supported trench lining system (ES type) with struts with variable length adjustment (SV)

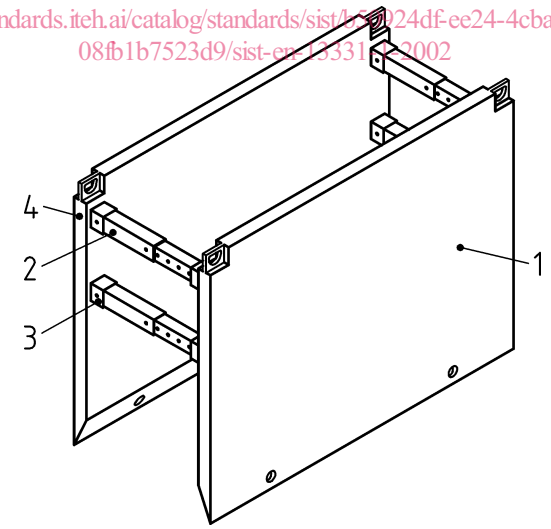

Key

1 Panel
2 Strut with incremental length adjustment
3 Clearance only connection
4 Integral panel soldier

Figure 3 — Example of an edge-supported trench lining system (ES type) with incremental struts and clearance only strut connections

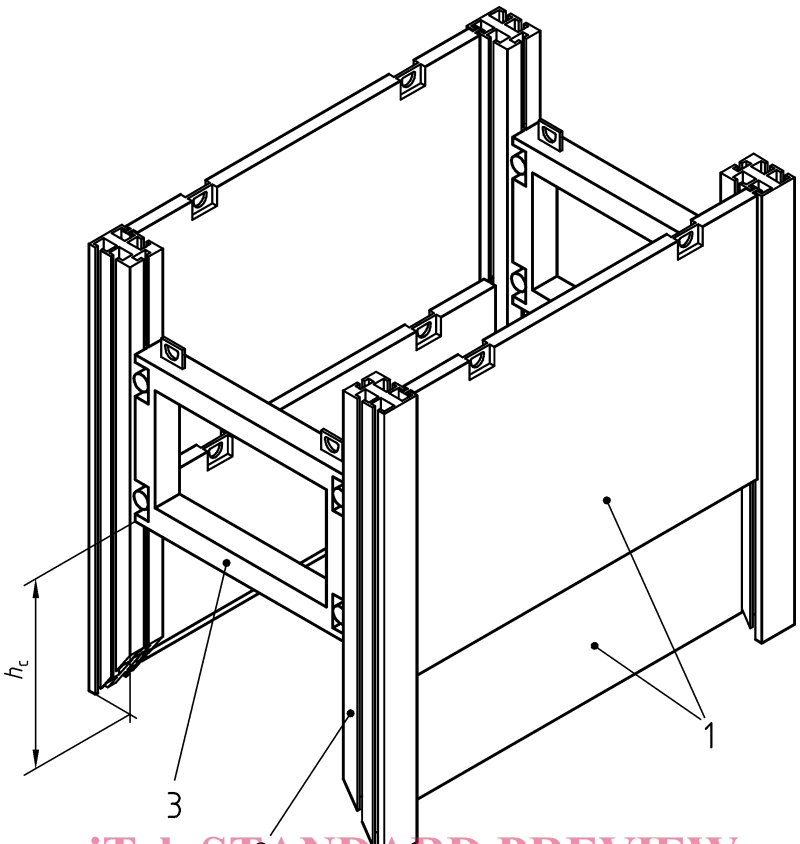

Key

1 Panel
2 Slide rail
3 Supporting frame
h_c Bottom strut clearance

Figure 4 — Example of a slide rail trench lining system, double type (RD), with supporting frames

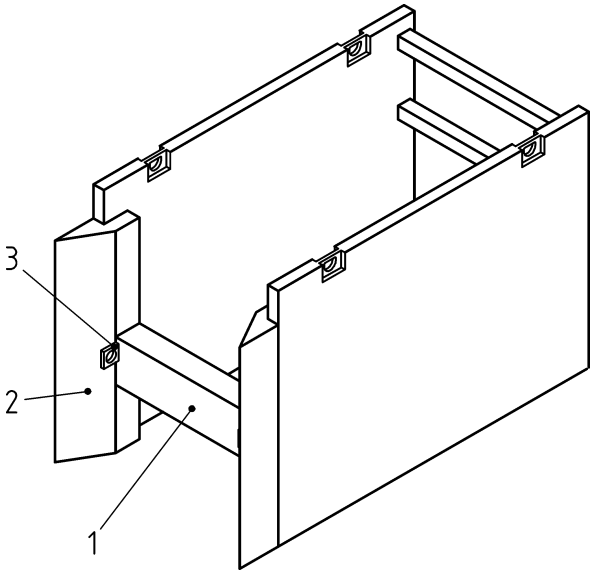

Key
1 Leading end strut
2 Cutting edge
3 Pulling point

Figure 5 — Example of a drag box (DB type)

3.3
supporting components

3.3.1
strut (S)
component that resists compressive and tensile forces and may resist moments at the end connections

3.3.2
strut with variable length adjustment (SV)
strut comprising threaded spindles, nuts and extension bars for which rough length adjustment is carried out by adding or removing extension bars, while fine length adjustment is achieved by means of the threaded spindles

3.3.3
strut with incremental length adjustment (SI)
strut comprising telescopic tubes with fixing holes and pins and/or extension bars for which only incremental adjustment is possible

3.3.4
non adjustable strut (SN)
strut with no facility for adjustment

3.3.5
extension bar
component used for axial insertion in a strut to increase its length

NOTE Two basic types of extension bar exist:

— with flanges at both ends (see Figures 6a and 6b);

— with a pinned spigot and socket connection (see Figure 6b).

3.3.6
supporting frame (FR)
component of a slide rail trench lining system that can be installed at any height above the bottom of the trench to resist compressive and tensile forces and bending moments (see Figure 4)

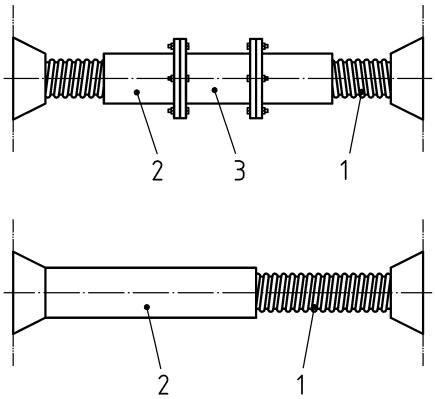

a)

a) Strut with variable length adjustment (SV)

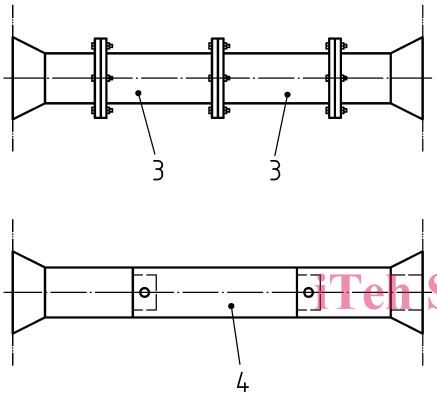

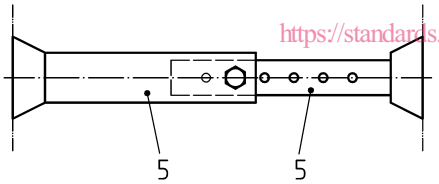

b)

b) Strut with incremental length adjustment (SI)

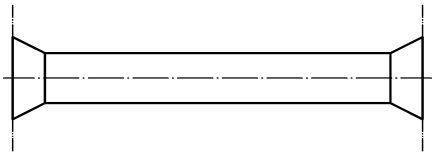

c)

c) Non adjustable strut (SN)

Key

1 Threaded spindle
2 Nut
3 Extension
4 Extension bar with a pinned spigot and socket connection
5 Telescopic tubes

Figure 6 — Example for strut types