INTERNATIONAL STANDARD

IEC 61883-6

Second edition
2005-10

Consumer audio/video equipment – Digital interface –

Part 6: Audio and music data transmission protocol

Withdrawn
iTeh Standards
(https://standards.iteh.ai)
Document Preview
IEC 61883-6:2005
https://standards.iteh.ai/catalog/standards/iec/6252 1d37-2bb8-40ae-9b44-499ea07d5551/iec-61883-6-2005

Reference number
IEC 61883-6:2005(E)

Publication numbering

As from 1 January 1997 all IEC publications are issued with a designation in the 60000 series. For example, IEC 34-1 is now referred to as IEC 60034-1.

Consolidated editions

The IEC is now publishing consolidated versions of its publications. For example, edition numbers 1.0, 1.1 and 1.2 refer, respectively, to the base publication, the base publication incorporating amendment 1 and the base publication incorporating amendments 1 and 2.

Further information on IEC publications

The technical content of IEC publications is kept under constant review by the IEC, thus ensuring that the content reflects current technology. Information relating to this publication, including its validity, is available in the IEC Catalogue of publications (see below) in addition to new editions, amendments and corrigenda. Information on the subjects under consideration and work in progress undertaken by the technical committee which has prepared this publication, as well as the list of publications issued, is also available from the following:

- **IEC Web Site (www.iec.ch)**

- **Catalogue of IEC publications**

  The on-line catalogue on the IEC web site (www.iec.ch/searchpub) enables you to search by a variety of criteria including text searches, technical committees and date of publication. On-line information is also available on recently issued publications, withdrawn and replaced publications, as well as corrigenda.

- **IEC Just Published**

  This summary of recently issued publications (www.iec.ch/online_news/ justpub) is also available by email. Please contact the Customer Service Centre (see below) for further information.

- **Customer Service Centre**

  If you have any questions regarding this publication or need further assistance, please contact the Customer Service Centre:

  Email: custserv@iec.ch
  Tel: +41 22 919 02 11
  Fax: +41 22 919 03 00

Withdrawn
iTeh Standards
(https://standards.iteh.ai)
Document Preview
IEC 61883-6:2005
https://standards.iteh.ai/catalog/standards/iec/0b521d37-2bb8-40ae-9b44-499ea07d5551/iec-61883-6-2005

INTERNATIONAL STANDARD

IEC 61883-6

Second edition
2005-10

Consumer audio/video equipment – Digital interface –

Part 6: Audio and music data transmission protocol

Withdrawn
iTeh Standards
(https://standards.iteh.ai)
Document Preview
IEC 61883-6:2005
https://standards.iteh.ai/catalog/standards/iec/02521d37-2bb8-40ae-9b44-499ea07d5551/iec-61883-6-2005

© IEC 2005 — Copyright - all rights reserved

No part of this publication may be reproduced or utilized in any form or by any means, electronic or mechanical, including photocopying and microfilm, without permission in writing from the publisher.

International Electrotechnical Commission, 3, rue de Varembé, PO Box 131, CH-1211 Geneva 20, Switzerland
Telephone: +41 22 919 02 11 Telefax: +41 22 919 03 00 E-mail: inmail@iec.ch Web: www.iec.ch

Commission Electrotechnique Internationale
International Electrotechnical Commission
Международная Электротехническая Комиссия

PRICE CODE XC

For price, see current catalogue

CONTENTS

FOREWORD 6

1 Scope 8
2 Normative references 8
3 Terms and definitions 8
4 Reference model for data transmission 10
4.1 Application layer 11
4.2 Adaptation layer 11
4.3 Packetization layer 12
5 Transport requirements 13
5.1 Arbitrated short bus reset 13
5.2 Bit, byte, and quadlet ordering 13
6 Packet header for audio and music data 13
6.1 Isochronous packet header format 13
6.2 CIP header format 13
7 Packetization 14
7.1 Packet transmission method 14
7.2 Transmission of timing information 14
7.3 Time stamp processing 15
7.4 Transmission control 16
8 Event types 17
8.1 General 17
8.2 AM824 data 20
8.3 32-bit floating-point data 28
8.4 24-bit * 4 audio pack 28
8.5 32-bit generic data 29
9 FDF definition 29
9.1 Introduction 29
9.2 Basic format 30
9.3 Special format 31
10 FDF definition for AM824 data 32
10.1 Definition of N-flag 32
10.2 Supplementary SFC definition 32
10.3 Clock-based rate control mode (FDF = 0000 $0xxx_2$) 33
10.4 Command-based rate control mode (FDF = $00001xxx_2$) 34
11 AM824 adaptation process 35
11.1 Introduction 35
11.2 Basic sequence conversion 35
11.3 Sequence multiplexing 35
11.4 Compound data block structure 36
12 AM824 sequence adaptation layers 40
12.1 General 40
12.2 DVD-Audio 56
12.3 SACD definition 59

Withdrawn
iTeh Standards
(https://standards.iteh.ai)
Document Preview
IEC 61883-6:2005
https://standards.iteh.ai/catalog/standards/iec/025c1d37-2bb8-40ae-9b44-499ea07d5551/iec-61883-6-2005

Annex A (informative) Blocking transmission method 64
Annex B (informative) Synchronization issues 66
Annex C (informative) Catching up in non-blocking transmission method 68
Annex D (informative) Transport characteristics 69

Bibliography 77

Figure 1 – Reference model for audio and music data transmission 10
Figure 2 – Reference model for AM824 data transmission 11
Figure 3 – Implementation example of receiver 12
Figure 4 – Isochronous packet header 13
Figure 5 – Common isochronous packet (CIP) format 14
Figure 6 – Non-blocking transmission method 16
Figure 7 – Transmission parameters 17
Figure 8 – Cluster events 18
Figure 9 – Pack and cluster events 19
Figure 10 – Pack event with 24-bit event sequence 19
Figure 11 – Generic AM824 format 20
Figure 12 – AM824 data with SUB LABEL 20
Figure 13 – AM824 LABEL allocation map (informative) 21
Figure 14 – IEC 60958-conformant data format 22
Figure 15 – MBLA data 22
Figure 16 – Raw audio data 23
Figure 17 – Alignment of 20-bit data in 24-bit field 23
Figure 18 – MIDI conformant data format 24
Figure 19 – No-data format 24
Figure 20 – High-precision multi-bit linear audio data 25
Figure 21 – Generic high-precision quadlet sequence 25
Figure 22 – Generic ancillary data 26
Figure 23 – Ancillary no data 26
Figure 24 – General format for ASID 27
Figure 25 – General format for application-specific ancillary data 28
Figure 26 – 32-bit floating-point data format 28
Figure 27 – 24-bit * 4 audio pack format 29
Figure 28 – 32-bit generic data format 29
Figure 29 – Generic FDF definition 30
Figure 30 – FDF code for NO-DATA packet 31
Figure 31 – Structure of FDF for AM824 data type 32
Figure 32 – SFC interpretation 32
Figure 33 – FDF for AM824 and AM824 LABEL space (informative) 33
Figure 34 – Adaptation to AM824 sequence 35
Figure 35 – Asynchronous sequence multiplexing 36
Figure 36 – Example of compound data block 37

iTeh Standards
(https://standards.iteh.ai)
Document Preview
Withdrawn

Figure 37 – Condition of AM824 rule 37
Figure 38 – Generic compound data block structure 38
Figure 39 – Example of unspecified region structure 39
Figure 40 – Generic one-bit audio quadlet 47
Figure 41 – Generic one-bit audio quadlet sequence 48
Figure 42 – One-bit audio DST encoded quadlet 48
Figure 43 – Multiplexing of MIDI data streams 49
Figure 44 – High-precision first ancillary data 50
Figure 45 – IEC 60958-conformant data with high-precision data 51
Figure 46 – Common and application-specific ancillary data with high-precision data 52
Figure 47 – High-precision channel assignment ancillary data 52
Figure 48 – Example of high-precision data 53
Figure 49 – Example of double-precision data 54
Figure 50 – Example of double-precision compound data 55
Figure 51 – Data transmitted at data starting-point 56
Figure 52 – Data transmitted at every data block 57
Figure 53 – Ancillary data for CCI 57
Figure 54 – Ancillary data for ISRC 58
Figure 55 – Basic data block of DVD-Audio stream 58
Figure 56 – Example of DVD-Audio data 59
Figure 57 – SACD ancillary data 60
Figure 58 – SACD supplementary data 61
Figure 59 – SACD Track_Mode&Flags data 61
Figure 60 – SACD Track_Copy_Management data 61
Figure 61 – Example of SACD stream in the case of six channels 62
Figure 62 – Example of SACD stream in the case of five channels 63
Figure A. 1 – Blocking transmission method 64
Figure D.1 – Two-node bus 72
Figure D.2 – Three-node bus 73
Figure D.3 – Thirty-five-node bus 74
Figure D.4 – Sample-clock recovery jitter attenuation template 75
Figure D.5 – Sample clock jitter measurement filter characteristic 76

Table 1 – Isochronous packet header fields 13
Table 2 – CIP fields 14
Table 3 – LABEL definition 21
Table 4 – SB and SF definitions 22
Table 5 – ASI1 definition 23
Table 6 – VBL (valid bit length code) definition 23
Table 7 – LABEL definition for one-bit audio (plain) 23
Table 8 – LABEL definition for one-bit audio (encoded) 24
Table 9 – C (counter) definition 24
Table 10 – Num. (slot number) definition 25

Withdrawn
iTeh Standards
(https://standards.iteh.ai)
Document Preview
IEC 61883-6:2005
https://standards.iteh.ai/catalog/standards/iec/...-61883-6-2005

Table 11 – LABEL definition for ancillary data type 26
Table 12 – LABEL definition for common ancillary data 26
Table 13 – CONTEXT definition 27
Table 14 – SUB LABEL definition for ASID 27
Table 15 – LABEL definition for application specific ancillary data 28
Table 16 – Subformat and FDF allocations 29
Table 17 – DBS for AM824 and 32-bit floating-point data 30
Table 18 – DBS for 24-bit * 4 audio pack 30
Table 19 – Event type (EVT) code definition 30
Table 20 – Default SFC table 30
Table 21 – TRANSFER_DELAY for blocking transmission 31
Table 22 – Default SFC table for FDF = 0000 $0xxx_2$ 33
Table 23 – TRANSFER_DELAY for blocking transmission 34
Table 24 – Default SFC table for FDF = 0000 $1xxx_2$ 34
Table 25 – Sampling frequency in IEC 60958-3:1999 40
Table 26 – Sampling frequency in IEC 60958-3:2002 41
Table 27 – Original sampling frequency 41
Table 28 – Up or down sampling ratio of 32 kHz line 42
Table 29 – Up or down sampling ratio of 44.1 kHz line 42
Table 30 – Up or down sampling ratio of 48 kHz line 42
Table 31 – Clock accuracy in IEC 60958-3 42
Table 32 – Cases 43
Table 33 – Examples 44
Table 34 – Relation of values in IEC 60958-3 and A/M protocol 46
Table 35 – Sampling frequency definition of one-bit audio 47
Table 36 – TRANSFER_DELAY for blocking transmission in the case of the one-bit audio 47
Table 37 – SFC definition of one-bit audio for high-speed AM824 data transfer 49
Table 38 – Channel definition 50
Table 39 – Accuracy definition 50
Table 40 – Recommended rules 51
Table 41 – Channel assignment definition 52
Table 42– ASI2 definition for DVD-Audio 56
Table 43– DVD-Audio specific ancillary data 56
Table 44 – Data transmitted at starting-point 57
Table 45 – Data transmitted at every data block 57
Table 46– data information (informative) 60
Table 47 – Validity flag definition 60
Table A. 1 – TRANSFER_DELAY for differing values of STF 65

Withdrawn
iTeh Standards
(https://standards.iteh.ai)
Document Preview
IEC 61883-6:2005

INTERNATIONAL ELECTROTECHNICAL COMMISSION

_____

CONSUMER AUDIO/VIDEO EQUIPMENT – DIGITAL INTERFACE –

Part 6: Audio and music data transmission protocol

FOREWORD

1) The International Electrotechnical Commission (IEC) is a worldwide organization for standardization comprising all national electrotechnical committees (IEC National Committees). The object of IEC is to promote international co-operation on all questions concerning standardization in the electrical and electronic fields. To this end and in addition to other activities, IEC publishes International Standards, Technical Specifications, Technical Reports, Publicly Available Specifications (PAS) and Guides (hereafter referred to as "IEC Publication(s)"). Their preparation is entrusted to technical committees; any IEC National Committee interested in the subject dealt with may participate in this preparatory work. International, governmental and non-governmental organizations liaising with the IEC also participate in this preparation. IEC collaborates closely with the International Organization for Standardization (ISO) in accordance with conditions determined by agreement between the two organizations.
2) The formal decisions or agreements of IEC on technical matters express, as nearly as possible, an international consensus of opinion on the relevant subjects since each technical committee has representation from all interested IEC National Committees.
3) IEC Publications have the form of recommendations for international use and are accepted by IEC National Committees in that sense. While all reasonable efforts are made to ensure that the technical content of IEC Publications is accurate, IEC cannot be held responsible for the way in which they are used or for any misinterpretation by any end user.
4) In order to promote international uniformity, IEC National Committees undertake to apply IEC Publications transparently to the maximum extent possible in their national and regional publications. Any divergence between any IEC Publication and the corresponding national or regional publication shall be clearly indicated in the latter.
5) IEC provides no marking procedure to indicate its approval and cannot be rendered responsible for any equipment declared to be in conformity with an IEC Publication.
6) All users should ensure that they have the latest edition of this publication.
7) No liability shall attach to IEC or its directors, employees, servants or agents including individual experts and members of its technical committees and IEC National Committees for any personal injury, property damage or other damage of any nature whatsoever, whether direct or indirect, or for costs (including legal fees) and expenses arising out of the publication, use of, or reliance upon, this IEC Publication or any other IEC Publications.
8) Attention is drawn to the Normative references cited in this publication. Use of the referenced publications is indispensable for the correct application of this publication.
9) Attention is drawn to the possibility that some of the elements of this IEC Publication may be the subject of patent rights. IEC shall not be held responsible for identifying any or all such patent rights.

International Standard IEC 61883-6 has been prepared by Technical Area 4: Digital system interfaces, of IEC technical committee 100: Audio, video and multimedia systems and equipment.

This second edition of IEC 61883-6 cancels and replaces the first edition published in 2002. This edition contains the following significant technical changes with respect to the previous edition.

a) It extends the AM824 data format transmission and specifies more details in order to reduce the ambiguities of the first edition.
b) It introduces new Clauses 4, 10, 11 and 12 as well as Annex D and, in 8.2, specifies new data types for SMPTE time code, sample count, high-precision multi-bit linear audio and ancillary data.
c) It changes the terminology "raw audio data" to "multi-bit linear audio (MBLA)".
d) It defines, in Clause 11, sequence multiplexing and MIDI data required to the AM824 adaptation process.

Withdrawn
Document Preview

e) It describes, in Clause 12, application-specific data transmission such as DVD-audio and SACD.

f) It specifies, in Clause 20, the N-flag that indicates command-based rate control and defines new sampling frequency code (SFC) definition and interpretation.

The text of this standard is based on the following documents:

FDIS	Report on voting
100/1001/FDIS	100/1024/RVD

Full information on the voting for the approval of this standard can be found in the report on voting indicated in the above table.

This publication has been drafted in accordance with the ISO/IEC Directives, Part 2.

IEC 61883 consists of the following parts under the general title *Consumer audio/video equipment – Digital interface*:

Part 1: General
Part 2: SD-DVCR data transmission
Part 3: HD-DVCR data transmission
Part 4: MPEG2-TS data transmission
Part 5: SDL-DVCR data transmission
Part 6: Audio and music data transmission protocol
Part 7: Transmission of ITU-R BO.1294 System B

The committee has decided that the contents of this publication will remain unchanged until the maintenance result date indicated on the IEC web site under "http://webstore.iec.ch" in the data related to the specific publication. At this date, the publication will be

- reconfirmed;
- withdrawn;
- replaced by a revised edition, or
- amended.

A bilingual version of this publication may be issued at a later date.

Withdrawn
iTeh Standards
(https://standards.iteh.ai)
Document Preview
IEC 61883-6:2005
https://standards.iteh.ai/catalog/standards/iec/625211d37-2bb8-40ae-9b44-499ea07d5551/iec-61883-6-2005

CONSUMER AUDIO/VIDEO EQUIPMENT – DIGITAL INTERFACE –

Part 6: Audio and music data transmission protocol

1 Scope

This part of IEC 61883 describes a protocol for the transmission of audio and music data employing IEEE 1394 and specifies essential requirements for the application of the protocol.

This protocol can be applied to all modules or devices that have any kind of audio and/or music data processing, generation and conversion function blocks. This document deals only with the transmission of audio and music data; the control, status and machine-readable description of these modules or devices should be defined outside of this document according to each application area.

2 Normative references

The following referenced documents are indispensable for the application of this document. For dated references, only the edition cited applies. For undated references, the latest edition of the referenced document (including any amendments) applies.

IEC 60958 (all parts), *Digital audio interface*

IEC 61883-1:2003, *Consumer audio/video equipment – Digital interface – Part 1: General*

IEC 61883-6:2002, *Consumer audio/video equipment – Digital interface – Part 6: Audio and music data transmission protocol*

IEEE 754:1985, *Standard for Binary Floating-Point Arithmetic*

IEEE 1394: *Standard for a High Performance Serial Bus*

3 Terms and definitions

For the purposes of this document, the terms and definitions given in IEC 61883-1, as well as the following, apply.

3.1
32-bit floating-point data
data type which is defined in IEEE 754:985

3.2
AM824 Data
32-bit data consisting of an 8-bit label and 24-bit data

3.3
A/M protocol
protocol for the transmission of audio and music data over IEEE 1394

IECNORM.COM : Click to view the full PDF of IEC 61883-6:2005
Withdrawn
(https://standards.iteh.ai)
Document Preview
https://standards.iteh.ai/catalog/standards/iec/625d1d37-2bb8-40ae-9b44-499ea07d5551/iec-61883-6-2005

3.4
ASID
Audio Software Information Delivery (see http://riaj.japan-music.or.jp/tech/asid/e.html)

3.5
AV/C
Audio Video Control

3.6
DVD

3.7 Digital Versatile Discs (see http://www.dvdforum.org/index.htm)
MIDI
Musical Instrument Digital Interface

NOTE The complete MIDI 1.0 detailed specification, Version 96.1, March 1996, is a specification for the interconnection of digital music processing devices (for example, keyboards and signal processors) and computers.

3.8
music data
data generally used for controlling a tone generator.

NOTE The data defined in the MIDI specification, which may be called MIDI data, are an example of music data.

3.9
reserved
keyword used to describe objects – bit, byte, quadlet, octet, and field – or the code values assigned to these objects, the object or the code value being set aside for future standardization by the IEC

3.10 SACD
SACD Super Audio CD (see http://www.licensing.philips.com/).

3.11
stream
uni-directional data transmission

3.12
time stamp
quantized timing in which an event occurs based on a reference clock

NOTE The reference clock is CYCLE_TIME unless otherwise specified in this standard.

iTeh Standards
(https://standards.iteh.ai)
Document Preview
IEC 61883-6:2005
https://standards.iteh.ai/catalog/standards/iec/6252 1d37-2bb8-40ae-9b44-499ea07d5551/iec-61883-6-2005
Withdrawn

4 Reference model for data transmission

This clause describes a reference model for data transmission.

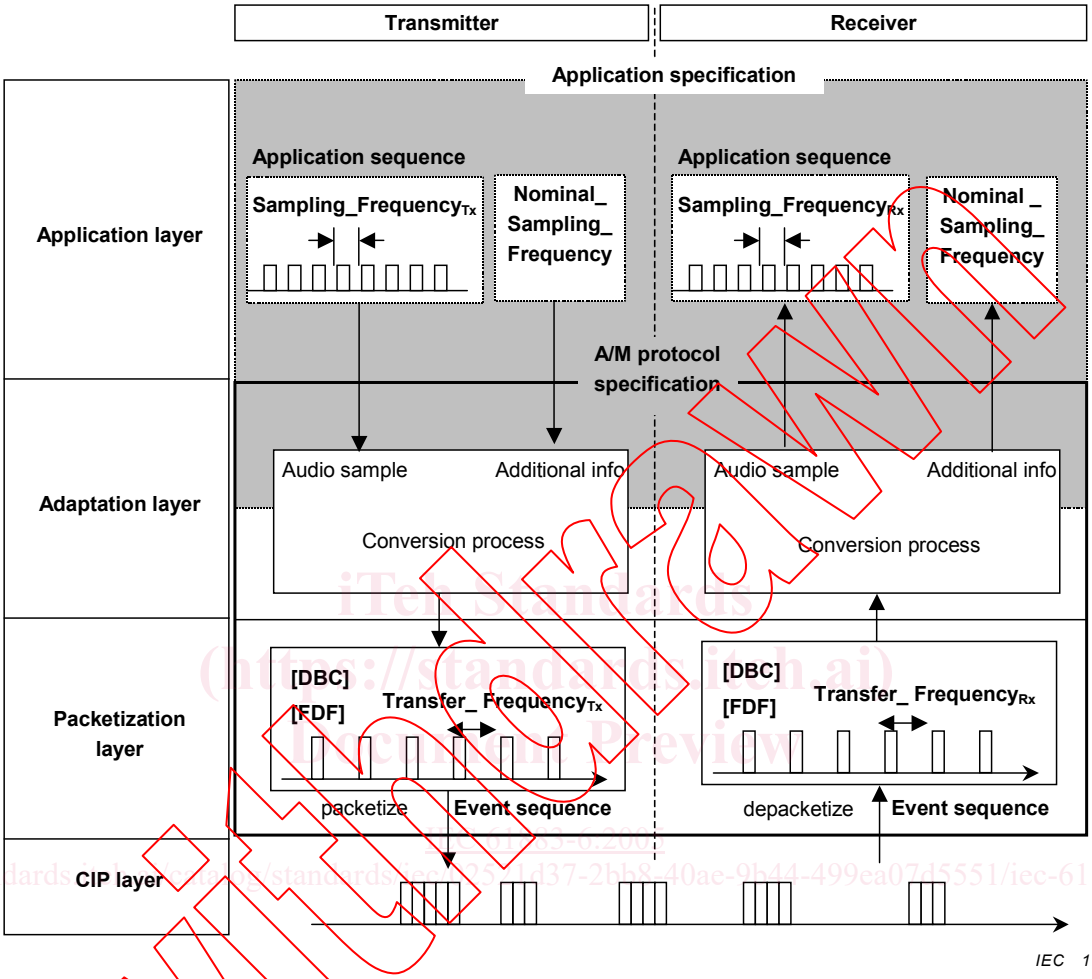

Figure 1 – Reference model for audio and music data transmission

iTeh Standards (https://standards.iteh.ai) Document Preview
IEC 61883-6:2005
https://standards.iteh.ai/catalog/standards/iec/025d1d37-2bb8-40ae-9b44-499ea07d5551/iec-61883-6-2005
Withdrawn

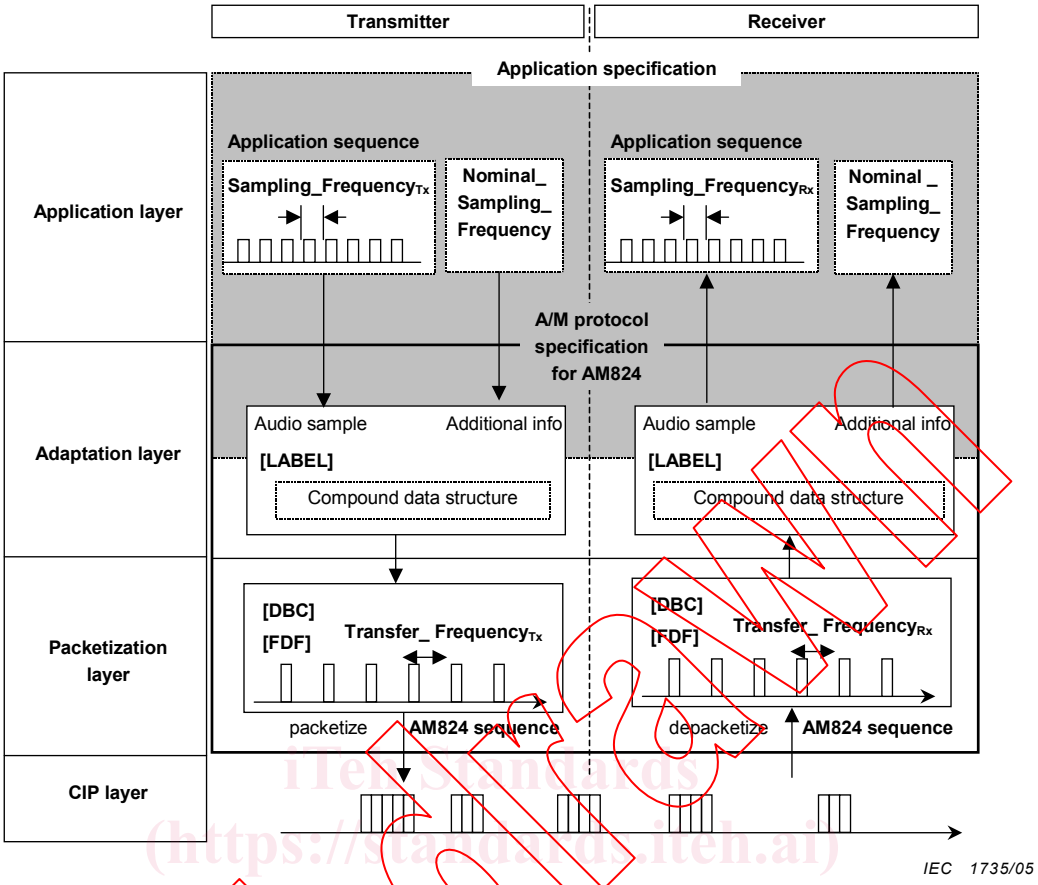

Figure 2 – Reference model for AM824 data transmission

Figure 1 gives an outline for audio data transmission from a transmitter to a receiver. It has four major layers denoted as CIP (common isochronous packet) layer, packetization layer, adaptation layer and application layer.

https://standards.iteh.ai/catalog/standards/sist/a2521d37-2bb8-40ae-9b44-499ea07d5551/iec-61883-6-2005

4.1 Application layer

Each application defines its own application sequence and the interface to the adaptation layer. The application sequence in Figure 1 is data in a format such as an audio signal format. The Nominal_Sampling_Frequency is the ideal sampling frequency for the application sequence. The range of *Sampling_Frequency* should be defined by the application. The audio signal at Nominal_Sampling_Frequency can be reproduced at the actual rate of Sampling_ Frequency in operation. This means that the value of Sampling_Frequency may have some deviation and/or may vary in time in contrast with Nominal_Sampling_Frequency.

Additional information in Figure 1 is any information other than events of a sequence (audio samples) being transmitted at a given rate.

4.2 Adaptation layer

The adaptation layer defines a process to convert an application sequence to an event sequence and vice versa. The conversion process may not be required if an application sequence and an event sequence have the same structure. If an event sequence consists of events of 24-bit payload, such as AM824 data defined in 8.2, and if the bit length of an audio sample of the application sequence is not 24-bit, some conversion between Sampling_Frequency and Transfer_Frequency may be required (see Figure 2 and Clause 11). The Transfer_Frequency represents the frequency of occurrence of a data block, which is equivalent to a cluster event. The Transfer_Frequency is used for describing a conceptual transmission model.

iTeh Standards (https://standards.iteh.ai) Document Preview
Withdrawn

The transfer rate of an event sequence is 24 * Transfer_ Frequency [bit/sec] in the case of AM824.

Generally, the adaptation layer is designed in such a way that both the application sequence at Sampling_Frequency and its Nominal_Sampling_Frequency are carried. In this specification, Nominal_Sampling_Frequency, which would usually be one of the ancillary data items, is carried by the SFC (sampling frequency code) which is defined in Clause 10. The information in Nominal_Sampling_Frequency is necessary for using command-based rate control or making a copy. On the other hand, Sampling_Frequency is necessary for clock-based rate control. Although Sampling_Frequency is not explicitly transmitted, it can be estimated from SYT_INTERVAL and time stamps by the algorithm specified for the AM824 data type.

An application specification defines the process (shown in the grey shaded area of Figure 1) to convert the signal of the application (application sequence) to an event sequence. This standard assumes that the application specification is an external document using the definition of an event sequence for the adaptation process. For several generic data types, this standard also defines the adaptation layer.

The adaptation to an event sequence is the point at which the packetization process interfaces to the application. The packetization process can be described as IEEE 1394 adaptation from the point of view that the data stream utilizes IEEE 1394 as its transport.

More details of this layer are described in Clause 12.

4.3 Packetization layer

The AM824 sequence is directly packetized to CIP or depacketized from CIP in the packetization layer.

The Transfer_Frequency can be implicitly expressed by the output of a locked PLL circuit, as shown in Figure 3, instead of being explicitly denoted in the packetization layer.

iTeh Standards (https://standards.iteh.ai) Document Preview
IEC 61883-6:2005
https://standards.iteh.ai/catalog/standards/iec/6252 1d37-2bb8-40ae-9b44-499ea07d5551/iec-61883-6-2005
Withdrawn

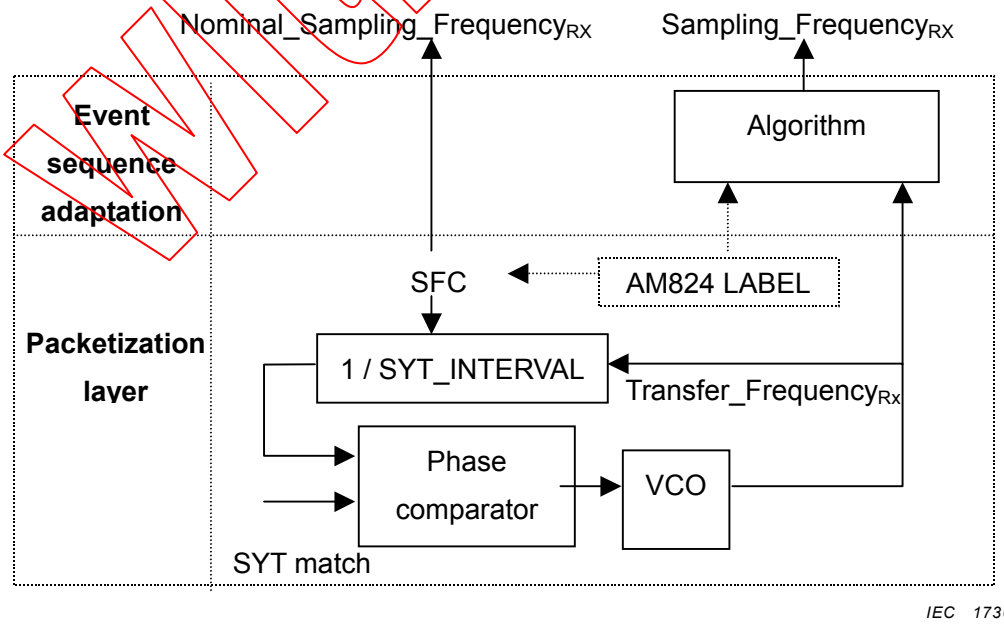

Figure 3 – Implementation example of receiver