SLOVENSKI STANDARD
SIST ETS 300 379-1:1997

01-november-1997

Signalizacijski protokoli in komutacija (SPS) - Vmesnik Q3 v krajevni centrali (LE) za upravljanje vzdrževalnih funkcij vmesnikov V5 in pridruženih uporabniških profilov - 1. del: Specifikacija vmesnika Q3

Signalling Protocols and Switching (SPS) - Q3 interface at the Local Exchange (LE) for fault and performance management of V5 interfaces and associated customer profiles; Part 1: Q3 interface specification

iTeh STANDARD PREVIEW
(standards.iteh.ai)
SIST ETS 300 379-1:1997
https://standards.iteh.ai/catalog/standards/sist/94e93095-6268-4bbd-adea-b16c5cc9d820/sist-ets-300-379-1-1997

Ta slovenski standard je istoveten z: **ETS 300 379-1 Edition 1**

ICS:

33.040.30	Komutacijski in signalizacijski sistem	Switching and signalling systems

SIST ETS 300 379-1:1997 **en**

2003-01.Slovenski inštitut za standardizacijo. Razmnoževanje celote ali delov tega standarda ni dovoljeno.

SIST ETS 300 379-1:1997

iTeh STANDARD PREVIEW
(standards.iteh.ai)

SIST ETS 300 379-1:1997
https://standards.iteh.ai/catalog/standards/sist/94e93095-6268-4bbd-adea-b16c5cc9d820/sist-ets-300-379-1-1997

SIST ETS 300 379-1:1997

EUROPEAN TELECOMMUNICATION STANDARD

ETS 300 379-1

November 1995

Source: ETSI TC-SPS

Reference: DE/SPS-03014.2

ICS: 35.100.70

Key words: TMN, information model, Q3 interface, LE, V5 interface, fault, performance, management

Signalling Protocols and Switching (SPS); Q3 interface at the Local Exchange (LE) for fault and performance management of V5 interfaces and associated customer profiles; Part 1: Q3 interface specification

iTeh STANDARD PREVIEW
(standards.iteh.ai)
SIST ETS 300 379-1:1997
https://standards.iteh.ai/catalog/standards/sist/b16c5cc9d820-sist-ets-300-379-1-1997

ETSI

European Telecommunications Standards Institute

ETSI Secretariat

Postal address: F-06921 Sophia Antipolis CEDEX - FRANCE
Office address: 650 Route des Lucioles - Sophia Antipolis - Valbonne - FRANCE
X.400: c=fr, a=atlas, p=etsi, s=secretariat - **Internet:** secretariat@etsi.fr

Tel.: +33 92 94 42 00 - Fax: +33 93 65 47 16

Copyright Notification: No part may be reproduced except as authorized by written permission. The copyright and the foregoing restriction extend to reproduction in all media.

© European Telecommunications Standards Institute 1995. All rights reserved.

New presentation - see History box

SIST ETS 300 379-1:1997

iTeh STANDARD PREVIEW
(standards.iteh.ai)

SIST ETS 300 379-1:1997
https://standards.iteh.ai/catalog/standards/sist/94e93095-6268-4bbd-adea-b16c5cc9d820/sist-ets-300-379-1-1997

Whilst every care has been taken in the preparation and publication of this document, errors in content, typographical or otherwise, may occur. If you have comments concerning its accuracy, please write to "ETSI Editing and Committee Support Dept." at the address shown on the title page.

SIST ETS 300 379-1:1997

Contents

Foreword 7

Introduction 7

1 Scope 9

2 Normative references 9

3 Definitions, symbols and abbreviations 10
3.1 Definitions 10
3.2 Symbols and abbreviations 11

4 Information model diagrams 12
4.1 Entity relationship diagram 12
4.2 Inheritance hierarchy 13
4.3 Naming hierarchy 13

5 Information model description 14
5.1 Description of object classes 14
5.1.1 V5 interface fragment 14
5.1.1.1 V5 interface (v5Interface) 14
5.1.1.2 V5 trail termination point (v5Ttp) 15
5.1.1.3 V5 time slot (v5TimeSlot) 15
5.1.2 Access port fragment 15
5.1.2.1 Virtual analogue access (virtualAnalogueAccess) 16
5.1.2.2 Virtual basic rate access (virtualBasicRateAccess) 16
5.1.2.3 Virtual primary rate access (virtualPrimaryRateAccess) 17
5.1.2.4 Virtual leased access (virtualLeasedAccess) 17
5.1.3 Communications path fragment 18
5.1.4 Protection fragment 18
5.1.5 Performance fragment 18
5.1.5.1 Bearer channel current data 18
5.1.5.2 Bearer channel history data 19
5.1.5.3 Communication channel current data 19
5.1.5.4 Communication channel history data 20
5.1.6 Alarm surveillance fragment 20
5.1.7 Support fragment 21
5.1.7.1 Event report management 21
5.1.7.2 Log control function 21
5.1.8 Test fragment 21
5.1.8.1 Access network ringback service treatment (anRbsTreatment) 21
5.2 Description of generic attributes 21
5.3 Description of generic actions 21
5.4 Description of generic notifications 21

6 Formal object class definitions 22
6.1 Definition of object classes 22
6.1.1 V5 interface fragment 22
6.1.2 Access port fragment 22
6.1.3 Communications path fragment 22
6.1.4 Protection fragment 22
6.1.5 Performance fragment 22
6.1.5.1 Bearer channel current data 22
6.1.5.2 Bearer channel history data 23
6.1.5.3 Communication channel current data 23
6.1.5.4 Communication channel history data 24

iTeh STANDARD PREVIEW
(standards.iteh.ai)
SIST ETS 300 379-1:1997
https://standards.iteh.ai/catalog/standards/sist/94e93095-6268-4bbd-adea-b16c5cc9d820/sist-ets-300-379-1-1997

SIST ETS 300 379-1:1997

6.1.6 Alarm surveillance fragment 24
6.1.7 Support fragment 24
6.1.8 Test fragment 25
6.1.8.1 Access network ringback service treatment 25
6.2 Name bindings 26
6.2.1 V5 interface fragment 26
6.2.2 Access port fragment 26
6.2.3 Communication path fragment 26
6.2.4 Protection fragment 26
6.2.5 Performance fragment 26
6.2.5.1 Bearer channel current data 26
6.2.5.2 Bearer channel history data 26
6.2.5.3 Communication channel current data 26
6.2.5.4 Communication channel history data 27
6.2.5.5 Simple scanner 27
6.2.6 Alarm surveillance fragment 27
6.2.7 Support fragment 27
6.2.8 Test fragment 27
6.2.8.1 Access network ringback service treatment 27
6.3 Definition of packages 28
6.3.1 Both-way bearer channel measurements package 28
6.3.2 Each-way bearer channel measurements package 28
6.3.3 Unsuccessful bearer channel allocation attempts package 28
6.4 Definition of attributes 28
6.4.1 Active standby 28
6.4.2 Apply ringing current 28
6.4.3 Apply tone 29
6.4.4 Bearer channel allocations 29
6.4.5 Bearer channel allocations originating 29
6.4.6 Bearer channel allocations terminating 29
6.4.7 Bearer channel holding times 29
6.4.8 Bearer channel holding times originating 29
6.4.9 Bearer channel holding times terminating 30
6.4.10 Bearer channel in-service times 30
6.4.11 Communication channel outages 30
6.4.12 Communication channel out of service any reason 30
6.4.13 Communication channel out of service far end block 30
6.4.14 Communication channel out of service near end block 30
6.4.15 Number of channels 31
6.4.16 Number of V5 links 31
6.4.17 Octets V5 frame 31
6.4.18 Unsuccessful bearer channel allocation attempts incoming 31
6.4.19 Unsuccessful bearer channel allocation attempts internal 31
6.5 Definition of actions 31
6.6 Definition of notifications 32
6.6.1 Off hook 32
6.6.2 On hook 32
6.6.3 Time out 32
6.7 Definition of parameters 32
6.7.1 Layer 3 port address 32
6.7.2 Envelope function address 32
6.7.3 Cause value 33
6.8 ASN.1 defined types module 33

7 Protocol requirements 34

Annex A (normative): Specification of parameters for V5 specific alarm reports 35

A.1 Alarm reports related to the V5 interface object class 35
A.1.1 Control protocol errors 35
A.1.2 Link control protocol errors 35
A.1.3 BCC protocol errors 36
A.1.4 Protection protocol errors 36

iTeh STANDARD PREVIEW
(standards.iteh.ai)
SIST ETS 300 379-1:1997
https://standards.iteh.ai/catalog/standards/sist/94e93095-6268-4bbd-adea-b16c5ce9d820/sist-ets-300-379-1-1997

SIST ETS 300 379-1:1997

A.1.5 PSTN protocol errors 36
A.1.6 Interface control failures 37
A.1.7 V5 data link failures 37

A.2 Alarm reports related to the V5 trail termination point object class 38
A.2.1 Link control failures 38
A.2.2 Link layer 1 failures 39

A.3 Alarm reports related to the V5 time slot object class 39
A.3.1 V5 communication channel failures 39

A.4 Alarm reports related to the virtual access port object class and subclasses 40
A.4.1 Control protocol errors 40
A.4.2 PSTN protocol errors 40
A.4.3 ISDN layer faults 41

Annex B (normative): V5 specific traffic measurement 42

B.1 Bearer channel oriented measurements at the V5 interface 42

B.2 Communication channel oriented measurements at the V5 interface 44

Annex C (informative): Task Information Base (TIB) 45

C.1 TMN management service "Fault management of V5 interfaces and associated user ports" 45
C.1.1 Description 45
C.1.2 Components of service (TIB A) 45
C.1.3 Management function list (TIB B) 46

C.2 TMN management service "Performance management of V5 interfaces and associated user ports" 47
C.2.1 Description 47
C.2.2 Components of service (TIB A) 47
C.2.3 Management function list (TIB B) 47

Annex D (informative): Description of management functions 48

D.1 Alarm surveillance 48
D.1.1 Alarm surveillance functions 48
D.1.2 Alarm reporting function 49

D.2 Performance management 50
D.2.1 Performance management functions 50
D.2.2 Performance management model 51

Annex E (informative): Bibliography 53

History 54

iTeh STANDARD PREVIEW
(standards.iteh.ai)
SIST ETS 300 379-1:1997
https://standards.iteh.ai/catalog/standards/sist/94e93095-6268-4bbd-adea-b16c5cc9d820/sist-ets-300-379-1-1997

SIST ETS 300 379-1:1997

Blank page

iTeh STANDARD PREVIEW
(standards.iteh.ai)

SIST ETS 300 379-1:1997
https://standards.iteh.ai/catalog/standards/sist/94e93095-6268-4bbd-adea-b16c5cc9d820/sist-ets-300-379-1-1997

SIST ETS 300 379-1:1997

Foreword

This European Telecommunication Standard (ETS) has been produced by the Signalling Protocols and Switching (SPS) Technical Committee of the European Telecommunications Standards Institute (ETSI).

This ETS is part 1 of a multi-part standard as described below:

Part 1: **"Q3 interface specification at the Local Exchange (LE) for fault and performance management of V5 interfaces and associated customer profiles";**

NOTE: A possible further part 2 may contain the Managed Object Conformance Statement (MOCS) proforma specification.

The following multi-part standards are directly related to this ETS:

ETS 300 376: "Q3 interface at the Access Network (AN) for configuration management of V5 interfaces and associated user ports";

ETS 300 377: "Q3 interface at the Local Exchange (LE) for configuration management of V5 interfaces and associated customer profiles";

ETS 300 378: "Q3 interface at the Local Exchange (AN) for fault and performance management of V5 interfaces and associated user ports".

Transposition dates	
Date of adoption of this ETS:	17 November 1995
Date of latest announcement of this ETS (doa):	28 February 1996
Date of latest publication of new National Standard or endorsement of this ETS (dop/e):	31 August 1996
Date of withdrawal of any conflicting National Standard (dow):	31 August 1996

iTeh STANDARD PREVIEW
(standards.iteh.ai)
SIST ETS 300 379-1:1997
https://standards.iteh.ai/catalog/standards/sist/94e93095-6268-4bbd-adea-

Introduction

V5 interfaces, as described in ETS 300 324-1 and ETS 300 347-1, operate between a Local Exchange (LE) and an Access Network (AN) to support various narrowband Integrated Services Digital Network (ISDN) and Public Switched Telephone Network (PSTN) services. These interfaces and their associated user ports need to be managed by the Operations Systems (OSs) within the Telecommunications Management Network (TMN). This management is performed by means of Q3 interfaces.

The companion standard on configuration management ETS 300 377-1 defines how the Q3 interface of a LE handles the configuration information for V5 interfaces and their associated customer profiles. This ETS describes the extension to include fault and performance management.

Fault management of V5 interfaces and associated user ports is part of a management activity which is performed by the operator in order to detect failure conditions and to bring the customer access back to its normal state of operation whenever a deviation occurs.

Performance management of V5 interfaces and associated user ports is part of a management activity which is employed in order to maintain the quality of service levels agreed with the customers. The activities undertaken in performance management are monitoring, analysis and problem alerting, diagnosis, optimization and control.

A customer access is considered as being that part of the local network which extends from the network termination equipment up to and including the exchange termination.

SIST ETS 300 379-1:1997

Here, only these parts of the activities are covered which are related directly to a V5 interface between a LE and an AN or to that part of the customer access which extends from the AN to the network termination equipment. An ISDN access extends to but does not include the T reference point. An analogue access extends to and may include the Customer Premise Equipment (CPE) (see figure 1).

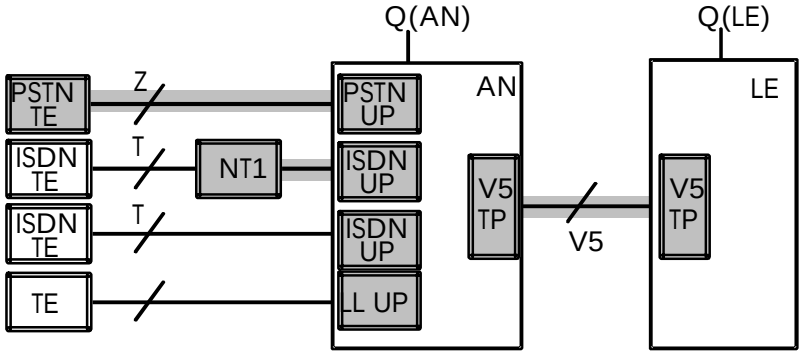

NOTE: Shaded areas are subject to V5 fault and performance management. User ports represent the different configurations for Line Circuit (LC), Line Termination (LT), Exchange Termination (ET) and Network Termination (NT) as given in figure 2 of the V5 specifications ETS 300 324-1 and ETS 300 347-1.

Figure 1: Scope of V5 fault and performance management

This ETS details only those functions and management information model components for which V5 specific descriptions are required. However, the use of other components which may be applicable from other specifications is not precluded. In this case, combined application incorporating both V5-specific and more generic aspects would result. For example, if log control is to be provided in conjunction with the V5 specific alarm reporting function (see annex A) then other specifications (e.g. CCITT Recommendation X.735) are available to define this.

iTeh STANDARD PREVIEW
(standards.iteh.ai)

The management information model described in this ETS complements that for configuration; both information models will normally share the same physical interface.

SIST ETS 300 379-1:1997
https://standards.iteh.ai/catalog/standards/sist/94e93095-6268-4bbd-adea-b16c5cc9d820/sist-ets-300-379-1-1997

SIST ETS 300 379-1:1997

1 Scope

This European Telecommunication Standard (ETS) specifies the Q3 interface between a Local Exchange (LE) and the Telecommunications Management Network (TMN) for the support of Fault and Performance Management functions for V5 interfaces, as described in ETS 300 324-1 [2] and ETS 300 347-1 [3], and their associated customer profiles. The management of transmission, media and services which are not related to V5 interfaces is outside the scope of this ETS, as is the management of equipment. This ETS includes the logging of faults and related functions.

For certain implementations, some test related functions like line monitoring, pattern injection for loopback tests and Dual Tone Multi-Frequency (DTMF) measurements may also be performed in the LE, e.g. due to economical reasons. A Q interface for these functions is required at the LE. As they are not V5 specific, this has to be handled within an overall LE test model which is outside the scope of this ETS.

The location of the Q3 interface to which this ETS refers is specified in ETS 300 377-1 [4].

Existing protocols are used where possible, and the focus of the work is on defining the object models. The definition of Operations System (OS) functionality is outside the scope of this ETS.

2 Normative references

This ETS incorporates by dated and undated reference, provisions from other publications. These normative references are cited at the appropriate places in the text and the publications are listed hereafter. For dated references, subsequent amendments to or revisions of any of these publications apply to this ETS only when incorporated in it by amendment or revision. For undated references the latest edition of the publication referred to applies.

iTeh STANDARD PREVIEW
(standards.iteh.ai)

[1] I-ETS 300 292 (1995): "Network Aspects (NA); Functional specification of call routeing information management on the Operations System/Network Element (OS/NE) interface".

[2] ETS 300 324-1 (1994): "Signalling Protocols and Switching (SPS); V interfaces at the digital Local Exchange (LE); V5.1 interface for the support of Access Network (AN); Part 1: V5.1 interface specification".

SIST ETS 300 379-1:1997
https://standards.iteh.ai/catalog/standards/sist/94e93095-6268-4bbd-adea-b16c5cc9d820/sist-ets-300-379-1-1997

[3] ETS 300 347-1 (1994): "Signalling Protocols and Switching (SPS); V interfaces at the digital Local Exchange (LE); V5.2 interface for the support of Access Network (AN); Part 1: V5.2 interface specification".

[4] ETS 300 377-1 (1994): "Signalling Protocols and Switching (SPS); Q3 interface at the Local Exchange (LE) for configuration management of V5 interfaces and associated customer profiles; Part 1: Q3 interface specification".

[5] CEPT Recommendation T/S 54-08 E (1987): "ISDN subscriber access and installation maintenance".

[6] CCITT Recommendation M.3010 (1992): "Principles for a telecommunications management network".

[7] CCITT Recommendation M.3100 (1992): "Generic network information model".

[8] ITU-T Recommendation Q.821 (1993): "Stage 2 and stage 3 description for the Q3 interface - Alarm surveillance".

[9] ITU-T Recommendation Q.822: "Stage 1, stage 2 and stage 3 description for the Q3 interface - Performance management".

[10] CCITT Recommendation X.208 (1988): "Specification of Abstract Syntax Notification One (ASN.1)".

SIST ETS 300 379-1:1997

[11] CCITT Recommendation X.721 | ISO/IEC 10165-2 (1992): "Information technology - Open systems interconnection - Structure of management information: Definition of management information".

[12] CCITT Recommendation X.730 | ISO/IEC 10164-1 (1992): "Information technology - Open systems interconnection - Systems management: Object management function".

[13] CCITT Recommendation X.731 | ISO/IEC 10164-2 (1992): "Information technology - Open systems interconnection - Systems management: State management function".

[14] CCITT Recommendation X.732 | ISO/IEC 10164-3 (1992): "Information technology - Open systems interconnection - Systems management: Attributes for representing relationships".

[15] CCITT Recommendation X.733 | ISO/IEC 10164-4 (1992): "Information technology - Open systems interconnection - Systems management: Alarm reporting function".

[16] CCITT Recommendation X.734 | ISO/IEC 10164-5 (1992): "Information technology - Open systems interconnection - Systems management: Event report management function".

[17] CCITT Recommendation X.735 | ISO/IEC 10164-6 (1992): "Information technology - Open systems interconnection - Systems management: Log control functions".

iTeh STANDARD PREVIEW
(standards.iteh.ai)

[18] ITU-T Recommendation X.738 | ISO/IEC 10164-13 (1993): "Information technology - Open systems interconnection - Systems management: Summarization function".

SIST ETS 300 379-1:1997
https://standards.iteh.ai/catalog/standards/sist/6a2f8e05-62f8-4d0d-ad1a-d0d2e2c9d820/sist-ets-300-379-1-1997

[19] ITU-T Recommendation X.739 | ISO/IEC 10164-11 (1993): "Information technology - Open systems interconnection - Systems management: Metric objects and attributes".

[20] ITU-T Recommendation X.745 | ISO/IEC 10164-12 (1993): "Information technology - Open systems interconnection - Systems management: Test management function".

3 Definitions, symbols and abbreviations

3.1 Definitions

For the purposes of this ETS, the following definitions apply:

Access Network (AN): See ETS 300 324-1 [2].

bearer channel: See ETS 300 324-1 [2].

Bearer Channel Connection (BCC): See ETS 300 347-1 [3].

Communication channel (C-channel): See ETS 300 324-1 [2].

Communication path (C-path): See ETS 300 324-1 [2].

SIST ETS 300 379-1:1997

control protocol: See ETS 300 324-1 [2].

envelope function address: See ETS 300 324-1 [2].

layer 3 address: See ETS 300 324-1 [2].

leased lines: See ETS 300 324-1 [2].

Local Exchange (LE): See ETS 300 324-1 [2].

Operations System (OS): See CCITT Recommendation M.3010 [6].

protection protocol: See ETS 300 347-1 [3].

V5 interface: See ETS 300 324-1 [2].

V5 interface messages: This term refers to all Function Elements (FEs) and other V5 protocol messages as defined in ETS 300 324-1 [2] and ETS 300 347-1 [3] which are communicated via the V5 interface.

V5 time slot: See ETS 300 324-1 [2].

3.2 Symbols and abbreviations

For the purposes of this ETS, the following abbreviations apply:

AIS	Alarm Indication Signal
AN	Access Network
ASN.1	Abstract Syntax Notation One (see CCITT Recommendation X.208 [10])
BCC	Bearer Channel Connection
C-channel	Communication channel
C-path	Communication path
CPE	Customer Premise Equipment
CRC	Cyclic Redundancy Check
DTMF	Dual Tone Multi-Frequency
ET	Exchange Termination
ID	Identity, identifier
ISDN	Integrated Services Digital Network
LAPV5	Link Access Protocol for V5 interface
LC	Line Circuit
LE	Local Exchange
LFA	Loss of Frame Alignment
LT	Line Termination
M/C/O	Mandatory/Conditional/Optional
NE	Network Element
NT	Network Termination
OS	Operations System
PM	Performance Management
PSTN	Public Switched Telephone Network
RAI	Remote Alarm Indication
RDN	Relative Distinguished Name
TIB	Task Information Base
TMN	Telecommunication Management Network
TTP	Trail Termination Point

iTeh STANDARD PREVIEW
(standards.iteh.ai)
SIST ETS 300 379-1:1997
https://standards.iteh.ai/catalog/standards/sist/94e93095-6268-4bbd-adea-b16c3cc9d820/sist-ets-300-379-1-1997

SIST ETS 300 379-1:1997

4 Information model diagrams

The entity relationship diagram is given in subclause 4.1 and the inheritance hierarchy (is-a relationships) and naming hierarchy (containment relationships) are given in subclauses 4.2 and 4.3, respectively.

4.1 Entity relationship diagram

Traffic measurements in the LE are concerned with bearer channel allocation and communication channel traffic characteristics. Subclasses of ITU-T Recommendation Q.822 [9] currentData object class are used to store traffic measurement data obtained from the object instance they are contained in. The current data is updated every 15 minutes.

The object class bearerChannelCurrentData has attributes for bearer channel oriented performance measurements of a V5.2 interface. The measurement results are obtained from the v5Interface object instance representing the V5.2 interface. The object class commChannelCurrentData is contained in an instance of commChannel. It has attributes for communication channel oriented measurements related to a V5 communication channel.

An instance of ITU-T Recommendation X.738 [18] simpleScanner object class may be used to collect the traffic measurement results stored in commChannelCurrentData and bearerChannelCurrentData object instances in a certain time interval. It generates a scanReport notification being sent to the managing system. In addition, results may be logged in a scanReportRecord object instance which is contained in a log object.

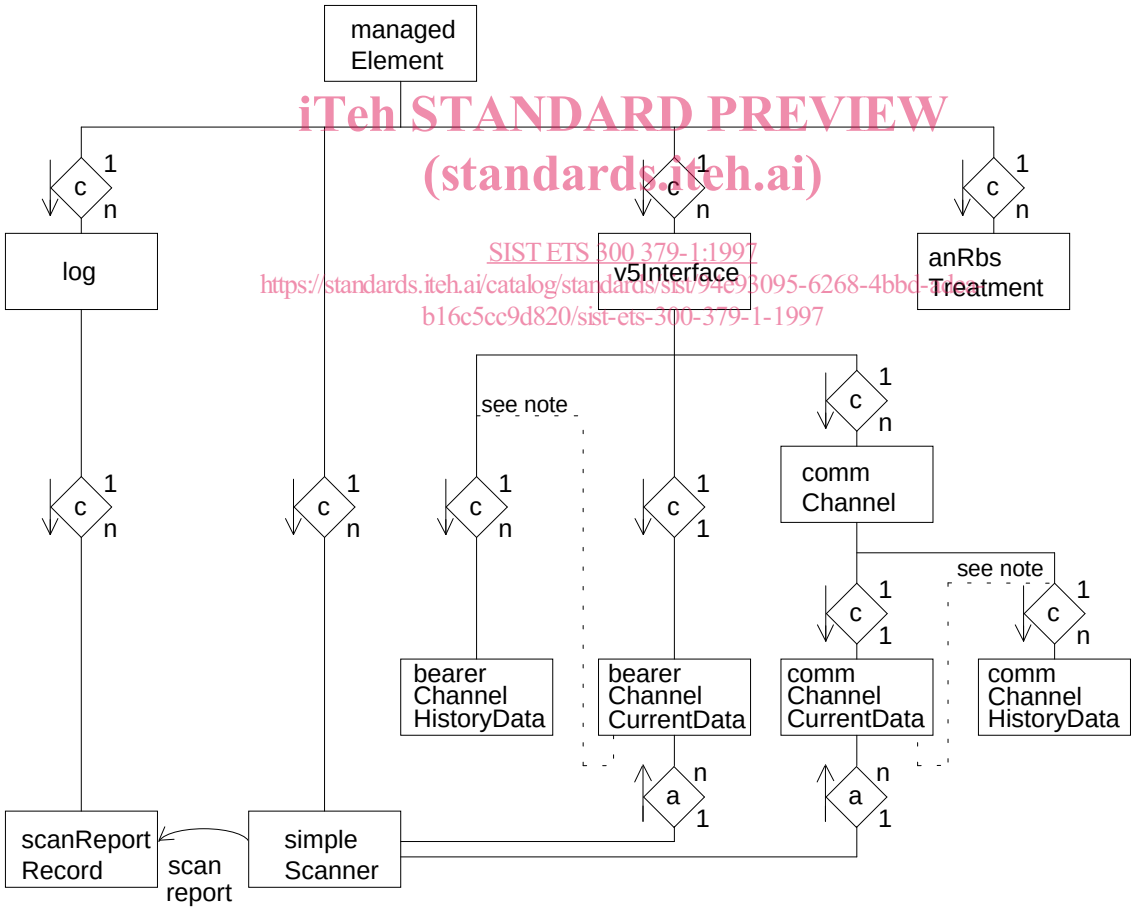

iTeh STANDARD PREVIEW
(standards.iteh.ai)
SIST ETS 300 379-1:1997
https://standards.iteh.ai/catalog/standards/sist/94e93095-6268-4bbd-b16c5cc9d820/sist-ets-300-379-1-1997

NOTE: History data objects may also be contained in the related current data objects.

Figure 2: Entity relationship diagram - V5 traffic measurement

Instead of generating scan reports, instances of the object classes bearerChannelHistoryData and commChannelHistoryData may be used to store the traffic measurement results. New instances of these object classes are created at the end of each interval.

SIST ETS 300 379-1:1997

4.2 Inheritance hierarchy

Figure 3 traces the inheritance from the highest level object "CCITT Recommendation X.721:1992":top to the managed objects defined in this ETS.

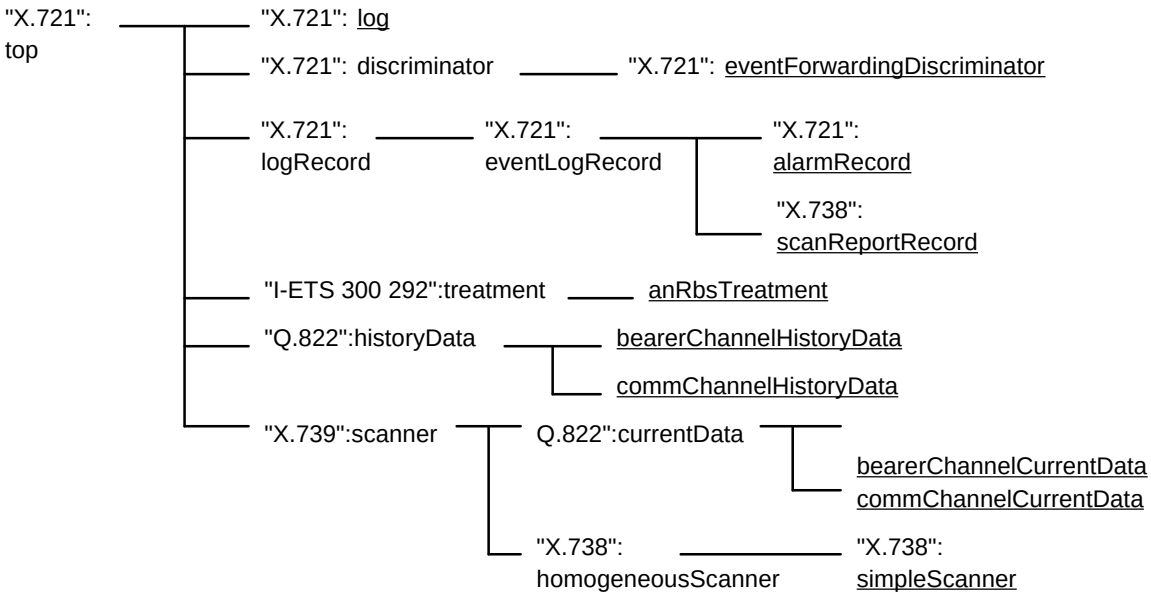

NOTE: Only classes which are underlined may be instantiated.

Figure 3: Inheritance hierarchy

iTeh STANDARD PREVIEW
(standards.iteh.ai)

4.3 Naming hierarchy

Figure 4 shows the naming (i.e. containment) relationships for the LE's managed objects associated with fault and performance management.

SIST ETS 300 379-1:1997
https://standards.iteh.ai/catalog/standards/sist/94e93095-6268-4bbd-adea-b16c5cc9d820/sist-ets-300-379-1-1997

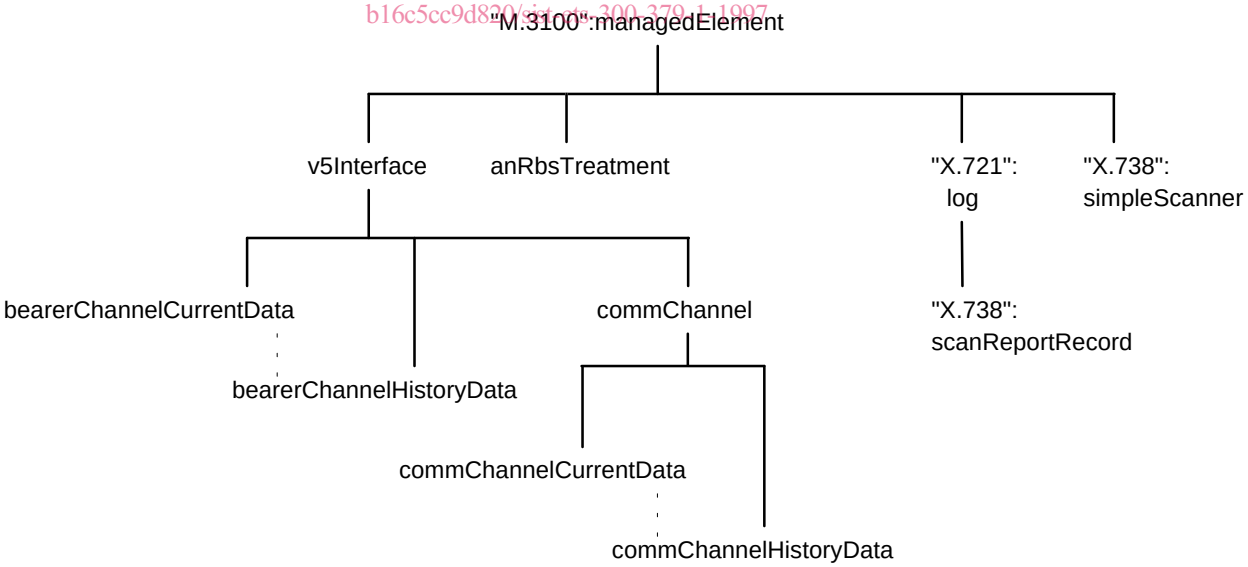

NOTE: History data objects may also be named from the related current data objects.

Figure 4: Naming hierarchy