IEC 60556

Edition 2.0 2006-04

INTERNATIONAL STANDARD

NORME INTERNATIONALE

Gyromagnetic materials intended for application at microwave frequencies – Measuring methods for properties

iTeh STANDARD PREVIEW
(standards.iteh.ai)

Matériaux gyromagnétiques destinés à des applications hyperfréquences – Méthodes de mesure des propriétés

IEC 60556:2006
https://standards.iteh.ai/catalog/standards/sist/c3bf73e1-2d47-44c3-a831-ce0756d3c198/iec-60556-2006

THIS PUBLICATION IS COPYRIGHT PROTECTED

Copyright © 2006 IEC, Geneva, Switzerland

All rights reserved. Unless otherwise specified, no part of this publication may be reproduced or utilized in any form or by any means, electronic or mechanical, including photocopying and microfilm, without permission in writing from either IEC or IEC's member National Committee in the country of the requester.
If you have any questions about IEC copyright or have an enquiry about obtaining additional rights to this publication, please contact the address below or your local IEC member National Committee for further information.

Droits de reproduction réservés. Sauf indication contraire, aucune partie de cette publication ne peut être reproduite ni utilisée sous quelque forme que ce soit et par aucun procédé, électronique ou mécanique, y compris la photocopie et les microfilms, sans l'accord écrit de la CEI ou du Comité national de la CEI du pays du demandeur.
Si vous avez des questions sur le copyright de la CEI ou si vous désirez obtenir des droits supplémentaires sur cette publication, utilisez les coordonnées ci-après ou contactez le Comité national de la CEI de votre pays de résidence.

IEC Central Office
3, rue de Varembé
CH-1211 Geneva 20
Switzerland
Email: inmail@iec.ch
Web: www.iec.ch

About the IEC

The International Electrotechnical Commission (IEC) is the leading global organization that prepares and publishes International Standards for all electrical, electronic and related technologies.

About IEC publications

The technical content of IEC publications is kept under constant review by the IEC. Please make sure that you have the latest edition, a corrigenda or an amendment might have been published.

- Catalogue of IEC publications: www.iec.ch/searchpub

The IEC on-line Catalogue enables you to search by a variety of criteria (reference number, text, technical committee,…). It also gives information on projects, withdrawn and replaced publications.

- IEC Just Published: www.iec.ch/online_news/justpub

Stay up to date on all new IEC publications. Just Published details twice a month all new publications released. Available on-line and also by email.

- Electropedia: www.electropedia.org

The world's leading online dictionary of electronic and electrical terms containing more than 20 000 terms and definitions in English and French, with equivalent terms in additional languages. Also known as the International Electrotechnical Vocabulary online.

- Customer Service Centre: www.iec.ch/webstore/custserv

If you wish to give us your feedback on this publication or need further assistance, please visit the Customer Service Centre FAQ or contact us:
Email: csc@iec.ch
Tel.: +41 22 919 02 11
Fax: +41 22 919 03 00

iTeh STANDARD PREVIEW
(standards.iteh.ai)
IEC 60556:2006
https://standards.iteh.ai/catalog/standards/sist/c3bf73e1-2d47-44c3-a831-ce7a5dda1f38/iec-60556-2006

A propos de la CEI

La Commission Electrotechnique Internationale (CEI) est la première organisation mondiale qui élabore et publie des normes internationales pour tout ce qui a trait à l'électricité, à l'électronique et aux technologies apparentées.

A propos des publications CEI

Le contenu technique des publications de la CEI est constamment revu. Veuillez vous assurer que vous possédez l'édition la plus récente, un corrigendum ou amendement peut avoir été publié.

- Catalogue des publications de la CEI: www.iec.ch/searchpub/cur_fut-f.htm

Le Catalogue en-ligne de la CEI vous permet d'effectuer des recherches en utilisant différents critères (numéro de référence, texte, comité d'études,…). Il donne aussi des informations sur les projets et les publications retirées ou remplacées.

- Just Published CEI: www.iec.ch/online_news/justpub

Restez informé sur les nouvelles publications de la CEI. Just Published détaille deux fois par mois les nouvelles publications parues. Disponible en-ligne et aussi par email.

- Electropedia: www.electropedia.org

Le premier dictionnaire en ligne au monde de termes électroniques et électriques. Il contient plus de 20 000 termes et définitions en anglais et en français, ainsi que les termes équivalents dans les langues additionnelles. Egalement appelé Vocabulaire Electrotechnique International en ligne.

- Service Clients: www.iec.ch/webstore/custserv/custserv_entry-f.htm

Si vous désirez nous donner des commentaires sur cette publication ou si vous avez des questions, visitez le FAQ du Service clients ou contactez-nous:
Email: csc@iec.ch
Tél.: +41 22 919 02 11
Fax: +41 22 919 03 00

IEC 60556

Edition 2.0 2006-04

INTERNATIONAL STANDARD

NORME INTERNATIONALE

Gyromagnetic materials intended for application at microwave frequencies – Measuring methods for properties

iTeh STANDARD PREVIEW
(standards.iteh.ai)

Matériaux gyromagnétiques destinés à des applications hyperfréquences – Méthodes de mesure des propriétés

IEC 60556:2006
https://standards.iteh.ai/catalog/standards/sist/c3bf73e1-2d47-44c3-a831-ce0756d3c198/iec-60556-2006

INTERNATIONAL ELECTROTECHNICAL COMMISSION

COMMISSION ELECTROTECHNIQUE INTERNATIONALE

PRICE CODE XA
CODE PRIX

ICS 29.100.10

ISBN 978-2-88912-595-1

® Registered trademark of the International Electrotechnical Commission
Marque déposée de la Commission Electrotechnique Internationale

CONTENTS

FOREWORD 5
1 Scope 7
2 Normative references 7
3 Terms and definitions 7
4 Saturation magnetization M_S 7
4.1 General 7
4.2 Object 8
4.3 Theory 8
4.4 Test sample 9
4.5 Measuring apparatus for the vibrating coil method (VCM) 9
4.6 Measuring apparatus for the vibrating sample method (VSM) 12
4.7 Calibration 15
4.8 Measuring procedure 16
4.9 Calculation 17
4.10 Accuracy 17
4.11 Data presentation 18
5 Magnetization (at specified field strength) M_H 18
5.1 General 18
5.2 Object 18
5.3 Theory 18
5.4 Test specimen 20
5.5 Measuring apparatus 21
5.6 Calibration 23
5.7 Measuring procedure 24
5.8 Calculation 24
5.9 Accuracy 24
5.10 Data presentation 24
6 Gyromagnetic resonance linewidth ΔH and effective Landé factor g_{eff} (general) 25
6.1 General 25
6.2 Object 25
6.3 Theory 25
6.4 Test specimens and cavities 26
6.5 Measuring apparatus 29
6.6 Measuring procedure 29
6.7 Calculation 31
6.8 Accuracy 31
6.9 Data presentation 31
7 Gyromagnetic resonance linewidth ΔH_{10} and effective Landé factor g_{10} (at 10 GHz) 31
7.1 General 31
7.2 Object 31
7.3 Theory 31
7.4 Test specimen and cavity 32
7.5 Measuring apparatus 33
7.6 Measuring procedure 33
7.7 Calculation 34
7.8 Accuracy 34

iTeh STANDARD PREVIEW
(standards.iteh.ai)
IEC 60556:2006
https://standards.iteh.ai/catalog/standards/sist/c3bf73e1-2d47-44c3-a831-ce0756d3c198/iec-60556-2006

7.9 Data presentation 35
8 Spin-wave resonance linewidth ΔH_k 35
8.1 General 35
8.2 Object 35
8.3 Theory 35
8.4 Test specimen and cavity 38
8.5 Measuring apparatus 39
8.6 Calibration 39
8.7 Measuring procedure 39
8.8 Calculation 40
8.9 Accuracy 40
8.10 Data presentation 40
9 Effective linewidth ΔH_{eff} 40
9.1 General 40
9.2 Object 40
9.3 Theory 41
9.4 Test specimen and cavity 43
9.5 Measuring apparatus 43
9.6 Calibration 44
9.7 Apparatus adjustment 44
9.8 Measuring procedure 45
9.9 Calculation 46
9.10 Accuracy 46
9.11 Data presentation 46
10 Complex permittivity $\underline{\varepsilon}_r$ 47
10.1 General 47
10.2 Object 47
10.3 Theory 47
10.4 Test specimen and cavity 50
10.5 Measuring apparatus 50
10.6 Measurement procedure 51
10.7 Calculation 51
10.8 Accuracy 52
10.9 Data presentation 52
11 Apparent density ρ_{app} 52
11.1 General 52
11.2 Apparent density (by mensuration) 52
11.3 Apparent density (by water densitometry) 54
Bibliography 56

Figure 1 – Vibrating coil method – Sample and coils arrangement 9
Figure 2 – Magnetic field configuration 10
Figure 3 – Measuring apparatus (VCM) 12
Figure 4 – Vibrating sample method – Sample and coil arrangement 13
Figure 5 – Measuring apparatus (VSM) 14
Figure 6 – Hysteresis curves for a magnetic material: $B(H)$ curve, $M(H)$ curve 19
Figure 7 – Test sample with compensation unit 20

iTeh STANDARD PREVIEW
(standards.iteh.ai)
IEC 60556:2006
https://standards.iteh.ai/catalog/standards/sist/c3bf73e1-2d47-44c3-a831-ce0756d3c198/iec-60556-2006

Figure 8 – Test specimen 21
Figure 9 – Measuring circuit for determining magnetization (at specified field strength) M_H 22
Figure 10 – Miller integrator 23
Figure 11 – Cavity for measurement of gyromagnetic resonance linewidth and effective Landé factor 27
Figure 12 – Stripline resonator for measurement of gyromagnetic resonance linewidth and effective Landé factor at low frequency 28
Figure 13 – Schematic diagram of the equipment required for measurement of gyromagnetic resonance linewidth and effective Landé factor 30
Figure 14 – Schematic diagram of the equipment required for measurement of gyromagnetic resonance linewidth and effective Landé factor at 10 GHz 34
Figure 15 – Subsidiary absorption and saturation of the normal resonance 36
Figure 16 – Pulse deterioration at onset of subsidiary resonance 36
Figure 17 – Measured critical r.f. field strength as a function of pulse duration t_d 37
Figure 18 – Typical TE_{104} cavity for the measurement of spin-wave resonance linewidth at about 9,3 GHz 38
Figure 19 – Block diagram of spin-wave resonance linewidth test equipment 39
Figure 20 – Sectional view of the cavity with specimen 42
Figure 21 – Dimensions of a cavity designed for resonance at a frequency of 9,1 GHz 42
Figure 22 – Schematic diagram of equipment for measuring effective linewidth ΔH_{eff} 44
Figure 23 – Determination of Q_0 46
Figure 24 – Ideal resonant cavity with specimen, used for theoretical calculation (sectional view) 48
Figure 25 – Dimensions of the resonant cavity with specimen 50
Figure 26 – Schematic diagram of equipment required for the measurement of complex dielectric constant 51

iTeh STANDARD PREVIEW
(standards.iteh.ai)
IEC 60556:2006
https://standards.iteh.ai/catalog/standards/sist/e5bf73e1-2d47-44c3-a831-ee0756d3c198/iec-60556-2006

INTERNATIONAL ELECTROTECHNICAL COMMISSION

GYROMAGNETIC MATERIALS INTENDED FOR APPLICATION AT MICROWAVE FREQUENCIES – MEASURING METHODS FOR PROPERTIES

FOREWORD

1) The International Electrotechnical Commission (IEC) is a worldwide organization for standardization comprising all national electrotechnical committees (IEC National Committees). The object of IEC is to promote international co-operation on all questions concerning standardization in the electrical and electronic fields. To this end and in addition to other activities, IEC publishes International Standards, Technical Specifications, Technical Reports, Publicly Available Specifications (PAS) and Guides (hereafter referred to as "IEC Publication(s)"). Their preparation is entrusted to technical committees; any IEC National Committee interested in the subject dealt with may participate in this preparatory work. International, governmental and non-governmental organizations liaising with the IEC also participate in this preparation. IEC collaborates closely with the International Organization for Standardization (ISO) in accordance with conditions determined by agreement between the two organizations.
2) The formal decisions or agreements of IEC on technical matters express, as nearly as possible, an international consensus of opinion on the relevant subjects since each technical committee has representation from all interested IEC National Committees.
3) IEC Publications have the form of recommendations for international use and are accepted by IEC National Committees in that sense. While all reasonable efforts are made to ensure that the technical content of IEC Publications is accurate, IEC cannot be held responsible for the way in which they are used or for any misinterpretation by any end user.
4) In order to promote international uniformity, IEC National Committees undertake to apply IEC Publications transparently to the maximum extent possible in their national and regional publications. Any divergence between any IEC Publication and the corresponding national or regional publication shall be clearly indicated in the latter.
5) IEC itself does not provide any attestation of conformity. Independent certification bodies provide conformity assessment services and, in some areas, access to IEC marks of conformity. IEC is not responsible for any services carried out by independent certification bodies.
6) All users should ensure that they have the latest edition of this publication.
7) No liability shall attach to IEC or its directors, employees, servants or agents including individual experts and members of its technical committees and IEC National Committees for any personal injury, property damage or other damage of any nature whatsoever, whether direct or indirect, or for costs (including legal fees) and expenses arising out of the publication, use of, or reliance upon, this IEC Publication or any other IEC Publications.
8) Attention is drawn to the Normative references cited in this publication. Use of the referenced publications is indispensable for the correct application of this publication.
9) Attention is drawn to the possibility that some of the elements of this IEC Publication may be the subject of patent rights. IEC shall not be held responsible for identifying any or all such patent rights.

iTeh STANDARD PREVIEW
(standards.iteh.ai)
IEC 60556:2006
https://standards.iteh.ai/catalog/standards/sist/c3bf73e1-2d47-44c3-a831-c0075bd3b190/iec-60556-2006

International Standard IEC 60556 has been prepared by IEC technical committee 51: Magnetic components and ferrite materials.

This second edition cancels and replaces the first edition, published in 1982, its amendment 1 (1997) and amendment 2 (2004). This edition constitutes a technical revision.

This second edition is a consolidation of the first edition and its amendments 1 and 2. It includes editorial improvements as well as improvements to the figures.

This standard is to be read in conjunction with IEC 60392.

This bilingual version (2011-07) replaces the English version.

The text of this standard is based on the following documents:

FDIS	Report on voting
51/850/FDIS	51/859/RVD

Full information on the voting for the approval of this standard can be found in the report on voting indicated in the above table.

The French version of this standard has not been voted upon.

This publication has been drafted in accordance with the ISO/IEC Directives, Part 2.

The committee has decided that the contents of this publication will remain unchanged until the stability date indicated on the IEC web site under "http://webstore.iec.ch" in the data related to the specific publication. At this date, the publication will be

- reconfirmed,
- withdrawn,
- replaced by a revised edition, or
- amended.

iTeh STANDARD PREVIEW
(standards.iteh.ai)
IEC 60556:2006
https://standards.iteh.ai/catalog/standards/sist/c3bf73e1-2d47-44c3-a831-ce0756d3c198/iec-60556-2006

GYROMAGNETIC MATERIALS INTENDED FOR APPLICATION AT MICROWAVE FREQUENCIES – MEASURING METHODS FOR PROPERTIES

1 Scope

This International Standard describes methods of measuring the properties used to specify polycrystalline microwave ferrites in accordance with IEC 60392 and for general use in ferrite technology. These measuring methods are intended for the investigation of materials, generally referred to as ferrites, for application at microwave frequencies.

Single crystals and thin films generally fall outside the scope of this standard.

NOTE 1 For the purposes of this standard, the words “ferrite” and “microwave” are used in a broad sense:

– by “ferrites” is meant not only magneto-dielectric chemical components having a spinel crystal structure, but also materials with garnet and hexagonal structures;

– the “microwave” region is taken to include wavelengths approximately between 1 m and 1 mm, the main interest being concentrated on the region 0,3 m to 10 mm.

NOTE 2 Examples of components employing microwave ferrites are non-reciprocal devices such as circulators, isolators and non-reciprocal phase-shifters. These constitute the major field of application, but the materials may be used in reciprocal devices as well, for example, modulators and (reciprocal) phase-shifters. Other applications include gyromagnetic filters, limiters and more sophisticated devices, such as parametric amplifiers.

iTeh STANDARD PREVIEW
(standards.iteh.ai)

2 Normative references

IEC 60556:2006
https://standards.iteh.ai/catalog/standards/sist/e5e1e1e0-0f75-4c1c-2e47-4fe5-a0e1-ce0750d5e19b/iec-60556-2006

The following referenced documents are indispensable for the application of this document. For dated references, only the edition cited applies. For undated references, the latest edition of the referenced document (including any amendment) applies.

IEC 60050-221, *International Electrotechnical Vocabulary (IEV) – Part 221: Magnetic materials components*

IEC 60205:2006, *Calculation of the effective parameters of magnetic piece parts*

IEC 60392:1972, *Guide for the drafting of specifications for microwave ferrites*

3 Terms and definitions

For the purposes of this document, the terms and definitions given in IEC 60050-221 apply.

4 Saturation magnetization M_s

4.1 General

Saturation magnetization is a characteristic parameter of ferrite materials. It is widely used in theoretical calculations, for instance in computation of tensor permeability components (see IEC 60050-221). In a variety of microwave applications, saturation magnetization determines the lower frequency limit of the device, mainly due to the occurrence of so-called low-field loss when the material is unsaturated.

4.2 Object

The object is to give two similar techniques for measuring saturation magnetization. These are the vibrating coil method (VCM) and vibrating sample method (VSM).

The vibrating coil method [1][1] [2] has the advantages of easier sample mounting and simpler mechanical arrangement when measurements over a range of temperatures are required, particularly at low temperatures.

The vibrating sample method is more accurate, given a similar degree of elaboration in electronic apparatus.

The equipment needed in both cases is very similar and the calibration methods are identical. The same test samples can be used for either technique.

4.3 Theory

When a sphere of isotropic magnetic material is placed in a uniform magnetic field, the sphere becomes uniformly magnetized in the direction parallel to the applied field. The sphere now produces its own external magnetic field, equivalent to that of a magnetic dipole at the centre of the sphere and orientated parallel to the direction of magnetization.

If a small detection coil (in practice a pair wound in opposition) is now vibrated at small amplitude, close to the sample sphere and in a direction at right angles to the applied field, a voltage e_s, will be induced in the coil, proportional to the rate of change of flux φ_s due to the sample at the mean coil position x_0 whose value is given by

iTeh STANDARD PREVIEW
(standards.iteh.ai)

$$e_s = -N \cdot \left(\frac{d\varphi_s}{dx}\right)_{x_0} \cdot \frac{dx}{dt} \tag{1}$$

IEC 60556:2006
https://standards.iteh.ai/catalog/standards/sist/c3bf73e1-2d47-44c3-a831-ee0756d3c198/iec-60556-2006

where N is the number of turns on the coil.

The motion of the coil, in the x-direction, is given by

$$x = x_0 + \delta \sin \omega t \tag{2}$$

where

x is displacement at time *t*;

ω is angular frequency;

δ is vibration amplitude.

If the unknown sample is now replaced by a calibrating sample of known saturation magnetization M_c and volume V_c, inducing a voltage e_c, the magnetization of the sample M_s may be found by comparison:

$$\frac{M_s}{M_c} = \frac{e_s}{e_c} \cdot \frac{V_c}{V_s} \tag{3}$$

If the induced voltages e_s and e_c give rise to readings E_s and E_c from the apparatus, then

$$M_s = M_c \cdot \frac{E_s}{E_c} \cdot \frac{d_c^3}{d_s^3} \tag{4}$$

where d_s and d_c are diameters of the sample and calibrating spheres, respectively.

---

[1] Figures in square brackets refer to the bibliography.

Identical equations apply in the VSM case, when the sample is vibrated while the coil remains stationary.

4.4 Test sample

For the dipole assumption to be valid, the test sample shall be a sphere, whose deviation from roundness is not more than 0,5 %. The percentage deviation from roundness is defined as

$$\left(\frac{\text{max. diameter} - \text{min. diameter}}{\text{min. diameter}} \right) \times 100 \qquad (5)$$

For most ferrite materials, a diameter of about 2,5 mm is suitable. If it is less than 1 mm, a reasonable signal-to-noise ratio will be difficult to achieve, particularly when M_s is low. Spheres larger than about 4 mm are less convenient to make and it is not so easy to maintain a uniform applied field over the volume of the sphere.

It may be permissible to use other than spherical samples, provided that the induced voltage can be shown to be a linear function of the magnetization to within the accuracy required, and that the calibration sample has identical dimensions to the samples to be measured.

4.5 Measuring apparatus for the vibrating coil method (VCM)

4.5.1 Arrangement of detection coils and sample

A schematic diagram of the arrangement of the detection coils and the sample is shown in Figure 1. Figure 2 indicates the directions of the applied and sample fields.

iTeh STANDARD PREVIEW
(standards.iteh.ai)

The sample is rigidly mounted between the pole-pieces of an electromagnet, in such a way that its position relative to the detection coils is reproducible to ±0,1 mm in any direction. All parts of the sample holder shall be made of non-magnetic material.

IEC 60556:2006
https://standards.iteh.ai/catalog/standards/sist/c3b173e1-2d47-44c3-a831-ce0756d3c198/iec-60556-2006

The detection coils are an identical pair wound in series opposition. They are attached to the vibrator by a rigid, non-magnetic arm and are located as close to the sample as practicable. Their axes are normally parallel to the direction of vibration, but other configurations are acceptable.

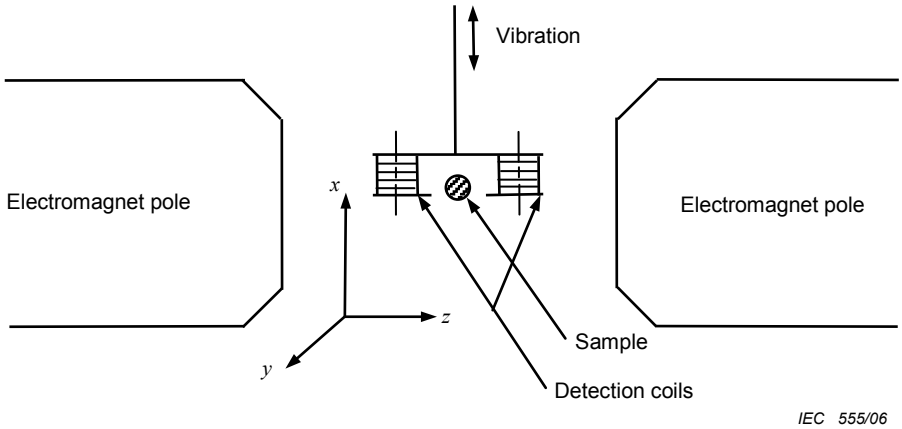

Figure 1 – Vibrating coil method – Sample and coils arrangement

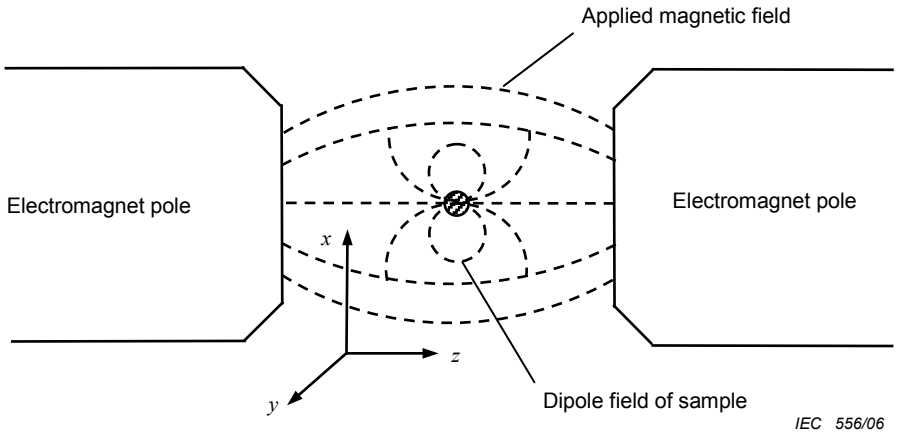

Figure 2 – Magnetic field configuration

The direction of vibration (the x-direction) is at 90° to the z-axis of the electromagnet (Figure 1), i.e. perpendicular to the magnetostatic field direction, and the amplitude shall be of the order of 0,05 mm to 0,5 mm. The frequency is not critical, but would normally be between 20 Hz and 200 Hz, although frequencies outside that range are acceptable. Motion of the coils in the z- and y-directions shall be limited by means of suitable mounting to not more than 1 % of that in the x-direction. Some means of stabilizing the vibration amplitude by use of a feedback loop may be incorporated if required.

iTeh STANDARD PREVIEW
(standards.iteh.ai)

4.5.2 The electromagnet

The magnetostatic field shall be capable of fully saturating a spherical specimen of the material to be measured. For most microwave ferrites, a field of 300 kAm^{-1} will be adequate, but for the hexagonal, barium-based ferrites, a field up to 500 kAm^{-1} may be needed. The current supply to the electromagnet shall be such as to maintain the field stable to 0,5 %.

IEC 60556:2006
https://standards.iteh.ai/catalog/standards/sist/e3bf73e1-2d47-44e3-a831-ce0756d3c198/iec-60556-2006

At the mean position of the detection coils, the transverse field shall be not more than 1 % of the longitudinal field (H_z).

Since the uniformity of the field is dependent on the field-strength, measurements shall always be made at the applied field at which calibration and zero-setting (see 4.8) have been carried out.

4.5.3 Elimination of applied field effects

If the applied field were wholly uniform and had no radial components, while the direction of vibration was exactly at right angles to the applied field, the theory of 4.3 could be applied directly to the experimental arrangement of Figure 1.

However, as indicated in Figure 2, the applied field is not uniform, and its direction and magnitude vary from point to point. Moreover, it is impracticable to make an identical pair of detection coils. The angle of vibration will deviate from 90° and some residual motion in the y- and z-directions will always be present.

Voltages will therefore be induced in the coils by the inhomogeneity of the applied field. The effect of H_z is considerably lessened by winding the coils in opposition, so that voltages due to H_z tend to cancel out whereas those due to the sample dipole field will add up.

However, complete cancellation cannot in general be achieved with one pair of coils alone. Therefore, a second pair of coils, the compensating coils, is used. These are mounted on the same formers as the sample coils, but are wound in series, so that the voltages induced by H_z are additive. A compensating voltage can then be obtained, which may be adjusted in amplitude and phase to balance out the voltage induced in the sample coils by H_z.

The effect of H_x is more difficult to eliminate because the voltages induced in the sample coils will be added in the same way as those due to the dipole field. However, in general, the variation of H_x with x will be different from that of the sample dipole field. The two signals will therefore differ in phase and may be distinguished by means of a phase sensitive detector.

4.5.4 Electronic instrumentation

A schematic diagram of the measuring apparatus is shown in Figure 3. The vibrator is driven by a low-frequency oscillator (9), which may be tunable, and a power amplifier. The amplitude of the oscillator output and the gain of the power amplifier shall be sufficiently stable to provide a constant drive to the vibrator to within ±0,3 %, after warm-up. If this is not possible, some means of stabilizing the vibration amplitude shall be provided. The oscillator frequency shall be stable to 0,05 % after warm-up.

The output from the compensating coils (1(c)) is balanced against that of the sample coils (1(s)) by means of the difference amplifier (4), using the variable attenuator (2) and phase shifter (3). The phase shifter shall be fully variable over 360° and its resolution shall be at least ±0,1°. Neither the phase shifter nor the attenuator needs to be calibrated.

The difference amplifier shall have a low enough noise level at low frequencies to allow precise zero setting. The exact requirements will depend on the design of the coils and other equipment. A variable gain control may be incorporated.

The low-pass filter (5) shall reduce all harmonics by at least 20 dB with respect to the fundamental frequency.

iTeh STANDARD PREVIEW
(standards.iteh.ai)

The selective amplifier, which is tuned to the oscillator frequency, shall have a bandwidth of the order of 1 % and shall be tunable if the oscillator is not tunable.

IEC 60556:2006
https://standards.iteh.ai/catalog/standards/sist/a21f73a1-2d47-44c3-a831-ea0756d3a108/iec-60556-2006

The phase-sensitive detector (7) shall have a resolution better than 3° and either the reference or signal channel shall be variable over 360° in phase. The phase setting shall be independent of the amplitude of the input to either channel.

The meter (8) may be an analogue or digital type. When measurements are to be made over a range of temperatures, an X–Y-recorder may be substituted for the meter, one axis to record a linear function of magnetization, the other a linear function of temperature. Both axes shall be calibrated to the accuracy required. The temperature measuring device, normally a thermocouple, shall be in close thermal contact with the sample itself.

All the electronic instruments shall have adequate temperature stability to ensure the required accuracy over the range of ambient temperatures to be met in use.

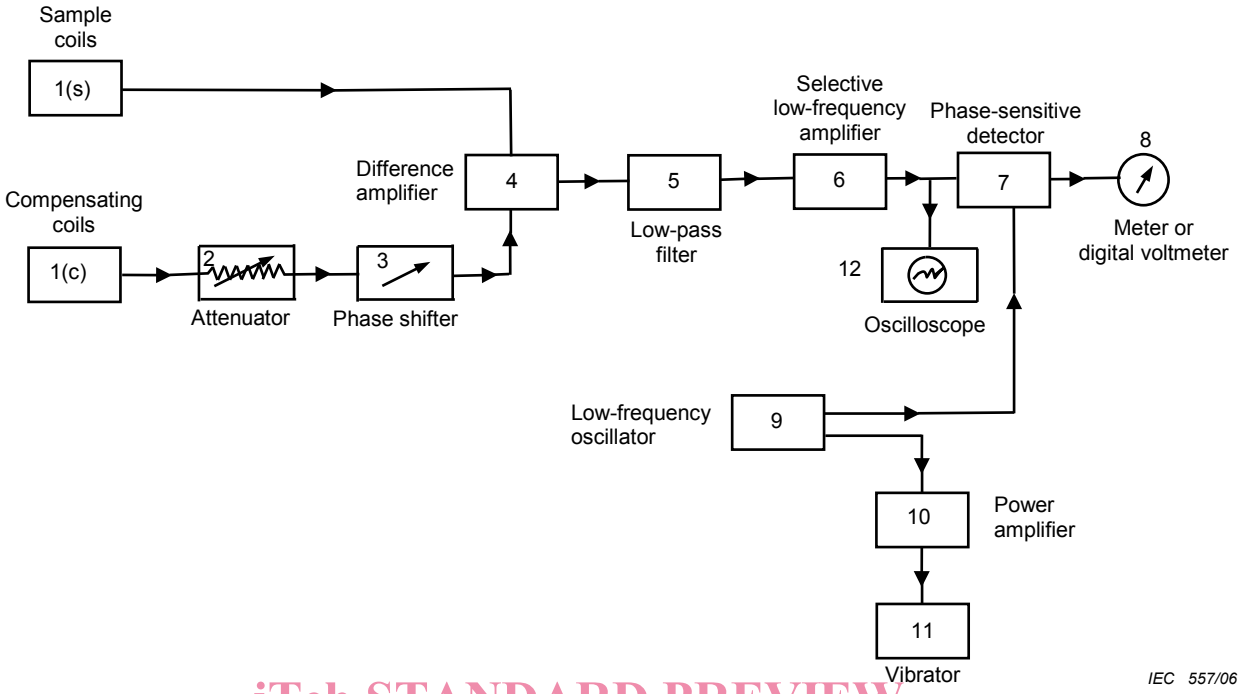

iTeh STANDARD PREVIEW
(standards.iteh.ai)

Figure 3 – Measuring apparatus (VCM)

IEC 60556:2006
https://standards.iteh.ai/catalog/standards/sist/c3bf73e1-2d47-44c3-a831-ec0756d3e198/iec-60556-2006

4.6 Measuring apparatus for the vibrating sample method (VSM)

4.6.1 Arrangement of detection coils and sample

In the vibrating sample case, the detection coils (Figure 4) are rigidly mounted between the pole-pieces of the electromagnet, but in such a way that frequent small adjustments are possible. Normally, their axes are at right angles to the applied field and parallel to the direction of vibration, but other configurations [5] are acceptable. The mean sample position is on the axis of the electromagnet, normally located symmetrically with respect to the detection coils. Its position shall be reproducible to ±0,1 mm. It is rigidly mounted on a non-magnetic vibrating arm, attached to a vibrator, and is as close to the detection coils as practicable.

The direction of vibration (the x-direction) is at 90° to the z-axis of the electromagnet (Figure 4), i.e. perpendicular to the magnetostatic field direction, and the amplitude shall be of the order of 0,05 mm to 0,5 mm. The frequency is not critical, but would normally be between 20 Hz and 200 Hz, although frequencies outside that range are acceptable. Motion of the sample in the z- and y-directions shall be limited by means of a suitable mounting to not more than 1 % of that in the x-direction. Some means of stabilizing the vibration amplitude by use of a feedback loop may be incorporated if necessary.

A small permanent magnet is attached to the vibrating arm, far enough away from the electromagnet to be unaffected by it. Two small coils are mounted rigidly on either side of this magnet to detect its field. A small coil carrying a precisely controlled direct current may be used instead of the magnet.

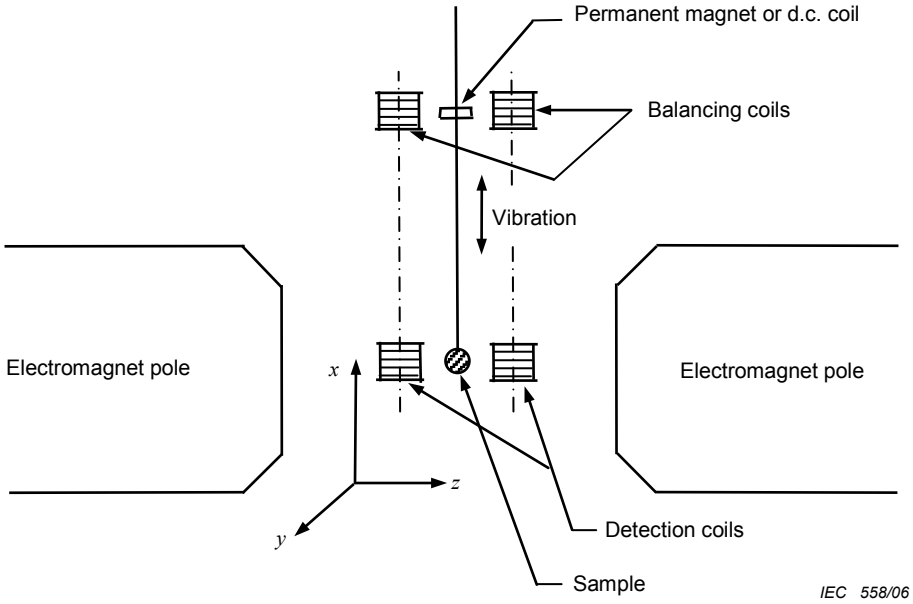

Figure 4 – Vibrating sample method – Sample and coil arrangement

iTeh STANDARD PREVIEW
(standards.iteh.ai)

4.6.2 The electromagnet

No precautions need be taken to counteract curvature and non-uniformity of applied field, provided that a uniformity of about 3 % over the volume of the sample is maintained. A radial field of up to 1 % of the longitudinal field is permissible.

IEC 60556:2006
https://standards.iteh.ai/catalog/standards/sist/c3bf73e1-2d47-44c3-a831-ce0756d3c198/iec-60556-2006

The magnetostatic field shall be capable of fully saturating a spherical specimen of the material to be measured. For most microwave ferrites, a field of 300 kAm^{-1} will be adequate, but for the hexagonal, barium-based ferrites a field up to 500 kAm^{-1} may be needed. The current supply shall maintain the field stable to about 0,5 %.

4.6.3 Electronic instrumentation

A schematic diagram of the electronic instrumentation is shown in Figure 5. The simplest arrangement uses only items 1 to 8, and allows point-by-point measurements to be made at fixed temperatures. The calibrated potential divider (3) is used to balance the voltage induced in the balancing coils against that in the sample coils. The null point is observed by means of the oscilloscope (5). Magnetization is calculated from the potential divider setting.

Alternatively, the null balance may be made with the empty sample holder in position. The out-of-balance signal on insertion of a sample is then proportional to magnetization. This signal may be read directly from the meter (5) or oscilloscope. For continuous plotting of M_s as a function of temperature, an X–Y-recorder may be substituted for the oscilloscope. Greater sensitivity and better stability may be obtained by use of a phase sensitive detector (9) to detect the signal, which may then be observed by means of a meter or recorder.

If a d.c. coil (12) is used instead of a permanent magnet to obtain the balancing voltage, automatic null balancing may be achieved by feeding the output of this phase sensitive detector to the d.c. coil. The current in the coil is then directly proportional to magnetization.

The coil current may be measured by means of a d.c. ammeter in series with it, or by a high-resistance voltmeter in parallel with the coil. In the second case, variations in coil resistance due to temperature changes shall be compatible with the degree of accuracy required in M_s.