INTERNATIONAL STANDARD

IEC 61169-37

QC 222400

First edition
2007-02

Radio-frequency connectors –

Part 37:
Sectional specification – STWX8 R.F. connectors

iTeh Standards
(https://standards.iteh.ai)
Document Preview

IEC 61169-37:2007
https://standards.iteh.ai/catalog/standards/iec/9c702a15-e568-4777-88b2-7a6cef1d54d7/iec-61169-37-2007

Reference number
IEC 61169-37:2007(E)

Publication numbering

As from 1 January 1997 all IEC publications are issued with a designation in the 60000 series. For example, IEC 34-1 is now referred to as IEC 60034-1.

Consolidated editions

The IEC is now publishing consolidated versions of its publications. For example, edition numbers 1.0, 1.1 and 1.2 refer, respectively, to the base publication, the base publication incorporating amendment 1 and the base publication incorporating amendments 1 and 2.

Further information on IEC publications

The technical content of IEC publications is kept under constant review by the IEC, thus ensuring that the content reflects current technology. Information relating to this publication, including its validity, is available in the IEC Catalogue of publications (see below) in addition to new editions, amendments and corrigenda. Information on the subjects under consideration and work in progress undertaken by the technical committee which has prepared this publication, as well as the list of publications issued, is also available from the following:

- **IEC Web Site (www.iec.ch)**

- **Catalogue of IEC publications**

  The on-line catalogue on the IEC web site (www.iec.ch/searchpub) enables you to search by a variety of criteria including text searches, technical committees and date of publication. On-line information is also available on recently issued publications, withdrawn and replaced publications, as well as corrigenda.

- **IEC Just Published**

  This summary of recently issued publications (www.iec.ch/online_news/ justpub) is also available by email. Please contact the Customer Service Centre (see below) for further information.

- **Customer Service Centre**

  If you have any questions regarding this publication or need further assistance, please contact the Customer Service Centre:

  Email: custserv@iec.ch
  Tel: +41 22 919 02 11
  Fax: +41 22 919 03 00

iTeh Standards
(https://standards.iteh.ai)
Document Preview
IEC 61169-37:2007
https://standards.iteh.ai/catalog/standards/iec/9c702a15-e568-4777-88b2-7a6cef1d54d7/iec-61169-37-2007

INTERNATIONAL STANDARD

IEC 61169-37

QC 222400

First edition
2007-02

Radio-frequency connectors –

Part 37:
Sectional specification – STWX8 R.F. connectors

iTeh Standards
(https://standards.iteh.ai)
Document Preview

IEC 61169-37:2007
https://standards.iteh.ai/catalog/standards/iec/9c702a15-e568-4777-88b2-7a6cef1d54d7/iec-61169-37-2007

© IEC 2007 — Copyright - all rights reserved

No part of this publication may be reproduced or utilized in any form or by any means, electronic or mechanical, including photocopying and microfilm, without permission in writing from the publisher.

International Electrotechnical Commission, 3, rue de Varembé, PO Box 131, CH-1211 Geneva 20, Switzerland
Telephone: +41 22 919 02 11 Telefax: +41 22 919 03 00 E-mail: inmail@iec.ch Web: www.iec.ch

Commission Electrotechnique Internationale
International Electrotechnical Commission
Международная Электротехническая Комиссия

PRICE CODE T

For price, see current catalogue

CONTENTS

FOREWORD 3

1 Scope 5
2 Normative references 5
3 Mating face and gauge information 5
3.1 Dimensions - General connectors – Grade 2 (Figure 1) 5
3.2 Gauges for general purpose connectors - Grade 2 7
3.3 Dimensions – standard test connectors – Grade 0 10
4 Quality assessment procedure 13
4.1 General 13
4.2 Rating and characteristics (see Clause 6 of IEC 61169-1 (QC 220000)) 13
4.3 Test schedule and inspection requirements - Acceptance tests 16
4.4 Procedures 19
5 Instructions for preparation of detail specifications 19
5.1 General 19
5.2 Identification of the detail specification 19
5.3 Identification of the component 19
5.4 Performance 20
5.5 Marking, ordering information and related matters 20
5.6 Selection of tests, tests conditions and severities 20
5.7 Blank detail specification pro-forma for type STWX 8 connectors 20

Figure 1 – Mating face of STWX8 connectors (for dimensions and notes, see Table 1) 6
Figure 2 – Gauge pins for contact of socket connectors (for dimensions, see Table 2) 8
Figure 3 – Gauge for outer of socket connectors (for dimensions, see Table 3) 9
Figure 4 – Female contact (for dimensions and notes, see Table 4) 10
Figure 5 – Male contact (for dimensions and notes, see Table 5) 12

Table 1 – Mating face dimensions 7
Table 2 – Gauges Dimensions 8
Table 3 – Gauge dimensions 10
Table 4 – Female contact dimensions 11
Table 5 – Male contact dimensions 12
Table 6 – Rating and characteristics 14
Table 7 – Acceptance tests 16
Table 8 – Periodic tests 17

iTeh Standards
(https://standards.iteh.ai)
Document Preview
IEC 61169-37:2007
https://standards.iteh.ai/catalog/standards/sist/...-61169-37-2007

INTERNATIONAL ELECTROTECHNICAL COMMISSION

RADIO-FREQUENCY CONNECTORS –

Part 37: Sectional specification – STWX8 R.F. connectors

FOREWORD

1) The International Electrotechnical Commission (IEC) is a worldwide organization for standardization comprising all national electrotechnical committees (IEC National Committees). The object of IEC is to promote international co-operation on all questions concerning standardization in the electrical and electronic fields. To this end and in addition to other activities, IEC publishes International Standards, Technical Specifications, Technical Reports, Publicly Available Specifications (PAS) and Guides (hereafter referred to as "IEC Publication(s)"). Their preparation is entrusted to technical committees; any IEC National Committee interested in the subject dealt with may participate in this preparatory work. International, governmental and non-governmental organizations liaising with the IEC also participate in this preparation. IEC collaborates closely with the International Organization for Standardization (ISO) in accordance with conditions determined by agreement between the two organizations.
2) The formal decisions or agreements of IEC on technical matters express, as nearly as possible, an international consensus of opinion on the relevant subjects since each technical committee has representation from all interested IEC National Committees.
3) IEC Publications have the form of recommendations for international use and are accepted by IEC National Committees in that sense. While all reasonable efforts are made to ensure that the technical content of IEC Publications is accurate, IEC cannot be held responsible for the way in which they are used or for any misinterpretation by any end user.
4) In order to promote international uniformity, IEC National Committees undertake to apply IEC Publications transparently to the maximum extent possible in their national and regional publications. Any divergence between any IEC Publication and the corresponding national or regional publication shall be clearly indicated in the latter.
5) IEC provides no marking procedure to indicate its approval and cannot be rendered responsible for any equipment declared to be in conformity with an IEC Publication.
6) All users should ensure that they have the latest edition of this publication.
7) No liability shall attach to IEC or its directors, employees, servants or agents including individual experts and members of its technical committees and IEC National Committees for any personal injury, property damage or other damage of any nature whatsoever, whether direct or indirect, or for costs (including legal fees) and expenses arising out of the publication, use of, or reliance upon, this IEC Publication or any other IEC Publications.
8) Attention is drawn to the Normative references cited in this publication. Use of the referenced publications is indispensable for the correct application of this publication.
9) Attention is drawn to the possibility that some of the elements of this IEC Publication may be the subject of patent rights. IEC shall not be held responsible for identifying any or all such patent rights.

iTeh Standards
(https://standards.iteh.ai)
Document Preview
IEC 61169-37:2007
https://standards.iteh.ai/catalog/standards/iec/0c700e15-e566-4777-88b2-7c6ef1d54d7f/iec-61169-37-2007

International Standard IEC 61169-37 has been prepared by subcommittee 46F: R.F. and microwave passive components, of IEC technical committee 46: Cables, wires, waveguides, R.F. connectors, R.F. and microwave passive components and accessories.

The text of this standard is based on the following documents:

CDV	Report on voting
46F/44/CDV	46F/49/RVC

Full information on the voting for the approval of this standard can be found in the report on voting indicated in the above table.

This publication has been drafted in accordance with the ISO/IEC Directives, Part 2.

A list of all parts of the IEC 61169 series, under the general title *Radio frequency connectors*, can be found on the IEC website.

The QC numbers that appear on the front cover of this publication are the specification numbers in the IEC Quality Assessment System for Electronic Components (IECQ).

The committee has decided that the contents of this publication will remain unchanged until the maintenance result date indicated on the IEC web site under "http://webstore.iec.ch" in the data related to the specific publication. At this date, the publication will be

- reconfirmed,
- withdrawn,
- replaced by a revised edition, or
- amended.

A bilingual version of this publication may be issued at a later date.

iTeh Standards
(https://standards.iteh.ai)
Document Preview

IEC 61169-37:2007
https://standards.iteh.ai/catalog/standards/iec/9c702a15-e568-4777-88b2-7a6cef1d54d7/iec-61169-37-2007

RADIO-FREQUENCY CONNECTORS –

Part 37: Sectional specification – STWX8 R.F. connectors

1 Scope

This part of IEC 61169, which is a Sectional Specification (SS), provides information and rules for the preparation of Detail Specifications (DS) for type STWX8 R.F. coaxial connectors with push-pull self-lock coupling.

The connectors are normally used with flexible and semi-rigid R.F. cables for middle power applications in conjunction with 50 Ω cables in an operating frequency range up to 4 GHz.

It describes the interface dimensions for general purpose grade 2 connectors, dimensional details for standard test connectors, grade 0, together with gauging information and the mandatory tests selected from QC 220000 (IEC 61169-1), applicable to all DS relating to type STWX8 connectors.

This specification indicates the recommended performance characteristics to be considered when writing a DS and covers test schedules and inspection requirements.

iTeh Standards
(https://standards.iteh.ai)
Document Preview

2 Normative references

The following referenced documents are indispensable for the application of this document. For dated references, only the edition cited applies. For undated references, the latest edition of the referenced document (including any amendments) applies.

IEC 61169-37:2007
https://standards.iteh.ai/catalog/standards/sist/9e709e15-e568-4777-88b2-7a6cef1d54d7/iec-61169-37-2007

IEC 60096 (all parts), *Radio-frequency cables*
IEC 61169-1:1992, *Radio-frequency connectors – Part 1: Generic specification – General requirements and measuring methods*
Amendment 1 (1996)
Amendment 2 (1997)

3 Mating face and gauge information

3.1 Dimensions - General connectors – Grade 2 (Figure 1)

All dimensions are in mm. All un-dimensioned pictorial configurations are for reference purpose only.

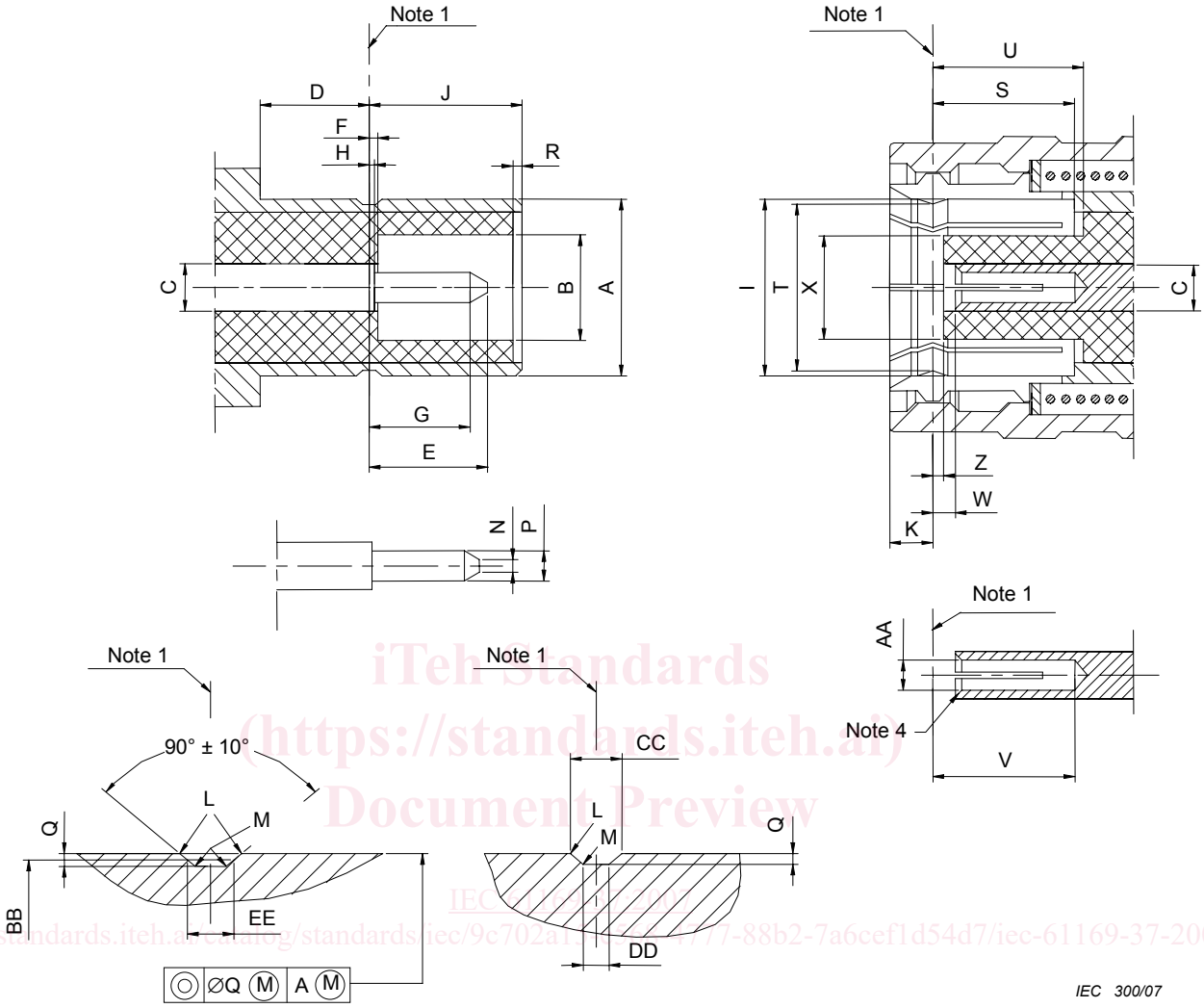

iTeh Standards
(https://standards.iteh.ai)
Document Preview
IEC 61169-37:2007
https://standards.iteh.ai/catalog/standards/iec/9c702a1f-...-88b2-7a6cef1d54d7/iec-61169-37-2007

Figure 1 – Mating face of STWX8 connectors
(for dimensions and notes, see Table 1)

Table 1 – Mating face dimensions

Reference	mm		Notes
	min.	max.	
A	8,12	8,20	Diameter
B	4,83,	-----	Diameter
C	2,06	2,21	Diameter
D	4,0	-----	
E	5,33	5,84	
F	------	0,18	
G	4,5	------	
H	-----	0,18	
I	8,22	8,28	Diameter
J	6,90	7,00	
K	------	2,20	
L	0,05	0,15	Radius
M	------	0,13	Radius
N	------	0,64	Diameter
P	1,32	1,37	Diameter
Q	0,19	0,25	
R	0,00	0,30	
S	7,05	------	
T	------	------	Diameter (see Note 2)
U	7,05	------	
V	6,00	------	
W	0,18	------	
X	------	4,72-	Diameter
Z	0,18	------	
AA	-------	------	Diameter (see Note 3)
BB	7,92	8,02	Diameter
CC	1,22	1,42	
DD	0,72	0,92	
EE	1,10		Nominal

NOTE 1 Reference plane: mechanical and electrical.

NOTE 2 To meet electrical and mechanical requirements.

NOTE 3 Bore diameter closed to meet electrical and mechanical requirements when mated with a 1,32/1,37 diameter.

iTeh Standards
(https://standards.iteh.ai)
Document Preview
IEC 61169-37:2007
https://standards.iteh.ai/catalog/standards/iec/9c702a15-e568-4777-88b2-7a6cefld54d7/iec-61169-37-2007

3.2 Gauges for general purpose connectors - Grade 2

All dimensions are in mm. All undimensioned pictorial configurations are for reference purposes only.

3.2.1 Gauges for socket contact

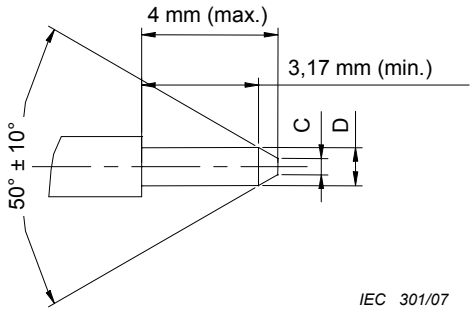

Figure 2 – Gauge pins for contact of socket connectors
(for dimensions, see Table 2)

Table 2 – Gauges Dimensions

Reference	Gauge A- Maximum material for sizing purposes		Gauge B – Minimum material for measurement of gauge retention force Mass of gauge: (80 ± 1) g	
	mm		mm	
	min.	max.	min.	max.
D	1,370	1,375	1,315	1,320
C	0	0,64	-----	------
Material: steel, polished. Surface roughness: Ra=0,4 µm maximum.				

iTeh Standards (https://standards.iteh.ai) Document Preview
IEC 61169-37:2007
https://standards.iteh.ai/catalog/standards/iec/9c702a15-e568-4777-88b2-7a6ce11d54d7/iec-61169-37-2007

Test procedure

According to 9.3.4 of IEC 61169-1, the gauge A shall be inserted three times into the socket center contact. This is a sizing operation.

After this, the gauge B shall be inserted into socket centre contact. The contact shall support the mass of the gauge in a vertical downward attitude.

NOTE The minimum diameter of gauge A corresponds to the maximum diameter of a male contact.