IEC 61169-37

Edition 1.0 2007-02

INTERNATIONAL STANDARD

NORME INTERNATIONALE

colour inside

Radio-frequency connectors –
Part 37: Sectional specification – STWX8 R.F. connectors

iTeh STANDARD PREVIEW
(standards.iteh.ai)

Connecteurs pour fréquences radioélectriques –
Partie 37: Spécification intermédiaire – Connecteurs pour fréquences radioélectriques STWX8

IEC 61169-37:2007
https://standards.iteh.ai/catalog/standards/sist/9e702a15-e3d8-4777-88b2-7a6cef1d54d7/iec-61169-37-2007



IEC 61169-37:2007-02(en-fr)

THIS PUBLICATION IS COPYRIGHT PROTECTED
Copyright © 2007 IEC, Geneva, Switzerland

All rights reserved. Unless otherwise specified, no part of this publication may be reproduced or utilized in any form or by any means, electronic or mechanical, including photocopying and microfilm, without permission in writing from either IEC or IEC's member National Committee in the country of the requester. If you have any questions about IEC copyright or have an enquiry about obtaining additional rights to this publication, please contact the address below or your local IEC member National Committee for further information.

Droits de reproduction réservés. Sauf indication contraire, aucune partie de cette publication ne peut être reproduite ni utilisée sous quelque forme que ce soit et par aucun procédé, électronique ou mécanique, y compris la photocopie et les microfilms, sans l'accord écrit de l'IEC ou du Comité national de l'IEC du pays du demandeur. Si vous avez des questions sur le copyright de l'IEC ou si vous désirez obtenir des droits supplémentaires sur cette publication, utilisez les coordonnées ci-après ou contactez le Comité national de l'IEC de votre pays de résidence.

IEC Central Office
3, rue de Varembé
CH-1211 Geneva 20
Switzerland

Tel.: +41 22 919 02 11
Fax: +41 22 919 03 00
info@iec.ch
www.iec.ch

About the IEC
The International Electrotechnical Commission (IEC) is the leading global organization that prepares and publishes International Standards for all electrical, electronic and related technologies.

About IEC publications
The technical content of IEC publications is kept under constant review by the IEC. Please make sure that you have the latest edition, a corrigenda or an amendment might have been published.

IEC Catalogue - webstore.iec.ch/catalogue
The stand-alone application for consulting the entire bibliographical information on IEC International Standards, Technical Specifications, Technical Reports and other documents. Available for PC, Mac OS, Android Tablets and iPad.

IEC publications search - www.iec.ch/searchpub
The advanced search enables to find IEC publications by a variety of criteria (reference number, text, technical committee,…). It also gives information on projects, replaced and withdrawn publications.

IEC Just Published - webstore.iec.ch/justpublished
Stay up to date on all new IEC publications. Just Published details all new publications released. Available online and also once a month by email.

Electropedia - www.electropedia.org
The world's leading online dictionary of electronic and electrical terms containing 20 000 terms and definitions in English and French, with equivalent terms in 15 additional languages. Also known as the International Electrotechnical Vocabulary (IEV) online.

IEC Glossary - std.iec.ch/glossary
65 000 electrotechnical terminology entries in English and French extracted from the Terms and Definitions clause of IEC publications issued since 2002. Some entries have been collected from earlier publications of IEC TC 37, 77, 86 and CISPR.

IEC Customer Service Centre - webstore.iec.ch/csc
If you wish to give us your feedback on this publication or need further assistance, please contact the Customer Service Centre: csc@iec.ch.

iTeh STANDARD PREVIEW
(standards.iteh.ai)
IEC 61169-37:2007
https://standards.iteh.ai/catalog/standards/sist/9c702a15-e568-4777-88b2-7a6cef1d54d7/iec-61169-37-2007

A propos de l'IEC
La Commission Electrotechnique Internationale (IEC) est la première organisation mondiale qui élabore et publie des Normes internationales pour tout ce qui a trait à l'électricité, à l'électronique et aux technologies apparentées.

A propos des publications IEC
Le contenu technique des publications IEC est constamment revu. Veuillez vous assurer que vous possédez l'édition la plus récente, un corrigendum ou amendement peut avoir été publié.

Catalogue IEC - webstore.iec.ch/catalogue
Application autonome pour consulter tous les renseignements bibliographiques sur les Normes internationales, Spécifications techniques, Rapports techniques et autres documents de l'IEC. Disponible pour PC, Mac OS, tablettes Android et iPad.

Recherche de publications IEC - www.iec.ch/searchpub

La recherche avancée permet de trouver des publications IEC en utilisant différents critères (numéro de référence, texte, comité d'études,…). Elle donne aussi des informations sur les projets et les publications remplacées ou retirées.

IEC Just Published - webstore.iec.ch/justpublished

Restez informé sur les nouvelles publications IEC. Just Published détaille les nouvelles publications parues. Disponible en ligne et aussi une fois par mois par email.

Electropedia - www.electropedia.org

Le premier dictionnaire en ligne de termes électroniques et électriques. Il contient 20 000 termes et définitions en anglais et en français, ainsi que les termes équivalents dans 15 langues additionnelles. Egalement appelé Vocabulaire Electrotechnique International (IEV) en ligne.

Glossaire IEC - std.iec.ch/glossary
65 000 entrées terminologiques électrotechniques, en anglais et en français, extraites des articles Termes et Définitions des publications IEC parues depuis 2002. Plus certaines entrées antérieures extraites des publications des CE 37, 77, 86 et CISPR de l'IEC.

Service Clients - webstore.iec.ch/csc

Si vous désirez nous donner des commentaires sur cette publication ou si vous avez des questions contactez-nous: csc@iec.ch.

IEC 61169-37

Edition 1.0 2007-02

INTERNATIONAL STANDARD

NORME INTERNATIONALE

colour inside

Radio-frequency connectors – Part 37: Sectional specification – STWX8 R.F. connectors

iTeh STANDARD PREVIEW
(standards.iteh.ai)

Connecteurs pour fréquences radioélectriques – Partie 37: Spécification intermédiaire – Connecteurs pour fréquences radioélectriques STWX8

IEC 61169-37:2007
https://standards.iteh.ai/catalog/standards/sist/5e7f2d1a-e5e8-4777-8e81-7a6cef1d54d7/iec-61169-37-2007

INTERNATIONAL ELECTROTECHNICAL COMMISSION

COMMISSION ELECTROTECHNIQUE INTERNATIONALE

ICS 33.120.30

ISBN 978-2-8322-3783-0

Warning! Make sure that you obtained this publication from an authorized distributor.
Attention! Veuillez vous assurer que vous avez obtenu cette publication via un distributeur agréé.

® Registered trademark of the International Electrotechnical Commission
Marque déposée de la Commission Electrotechnique Internationale

CONTENTS

FOREWORD 3
1 Scope 5
2 Normative references 5
3 Mating face and gauge information 5
3.1 Dimensions – General connectors – Grade 2 (Figure 1) 5
3.2 Gauges for general purpose connectors – Grade 2 7
3.3 Dimensions – standard test connectors – Grade 0 10
4 Quality assessment procedure 13
4.1 General 13
4.2 Rating and characteristics (see Clause 6 of IEC 61169-1 (QC 220000)) 13
4.3 Test schedule and inspection requirements - Acceptance tests 16
4.4 Procedures 19
5 Instructions for preparation of detail specifications 19
5.1 General 19
5.2 Identification of the detail specification 19
5.3 Identification of the component 19
5.4 Performance 20
5.5 Marking, ordering information and related matters 20
5.6 Selection of tests, tests conditions and severities 20
5.7 Blank detail specification pro-forma for type STWX 8 connectors 20

Figure 1 – Mating face of STWX8 connectors (for dimensions and notes, see Table 1) 6
Figure 2 – Gauge pins for contact of socket connectors (for dimensions, see Table 2) 8
Figure 3 – Gauge for outer of socket connectors (for dimensions, see Table 3) 9
Figure 4 – Female contact (for dimensions and notes, see Table 4) 10
Figure 5 – Male contact (for dimensions and notes, see Table 5) 12

Table 1 – Mating face dimensions 7
Table 2 – Gauges Dimensions 8
Table 3 – Gauge dimensions 10
Table 4 – Female contact dimensions 11
Table 5 – Male contact dimensions 12
Table 6 – Rating and characteristics 14
Table 7 – Acceptance tests 16
Table 8 – Periodic tests 17

iTeh STANDARD PREVIEW
(standards.iteh.ai)
IEC 61169-37:2007
https://standards.iteh.ai/catalog/standards/sist/9c702a15-e568-4777-88b2-7abce97d54d7/iec-61169-37-2007

INTERNATIONAL ELECTROTECHNICAL COMMISSION

_____

RADIO-FREQUENCY CONNECTORS –

Part 37: Sectional specification – STWX8 R.F. connectors

FOREWORD

1) The International Electrotechnical Commission (IEC) is a worldwide organization for standardization comprising all national electrotechnical committees (IEC National Committees). The object of IEC is to promote international co-operation on all questions concerning standardization in the electrical and electronic fields. To this end and in addition to other activities, IEC publishes International Standards, Technical Specifications, Technical Reports, Publicly Available Specifications (PAS) and Guides (hereafter referred to as "IEC Publication(s)"). Their preparation is entrusted to technical committees; any IEC National Committee interested in the subject dealt with may participate in this preparatory work. International, governmental and non-governmental organizations liaising with the IEC also participate in this preparation. IEC collaborates closely with the International Organization for Standardization (ISO) in accordance with conditions determined by agreement between the two organizations.
2) The formal decisions or agreements of IEC on technical matters express, as nearly as possible, an international consensus of opinion on the relevant subjects since each technical committee has representation from all interested IEC National Committees.
3) IEC Publications have the form of recommendations for international use and are accepted by IEC National Committees in that sense. While all reasonable efforts are made to ensure that the technical content of IEC Publications is accurate, IEC cannot be held responsible for the way in which they are used or for any misinterpretation by any end user.
4) In order to promote international uniformity, IEC National Committees undertake to apply IEC Publications transparently to the maximum extent possible in their national and regional publications. Any divergence between any IEC Publication and the corresponding national or regional publication shall be clearly indicated in the latter.
5) IEC provides no marking procedure to indicate its approval and cannot be rendered responsible for any equipment declared to be in conformity with an IEC Publication.
6) All users should ensure that they have the latest edition of this publication.
7) No liability shall attach to IEC or its directors, employees, servants or agents including individual experts and members of its technical committees and IEC National Committees for any personal injury, property damage or other damage of any nature whatsoever, whether direct or indirect, or for costs (including legal fees) and expenses arising out of the publication, use of, or reliance upon, this IEC Publication or any other IEC Publications.
8) Attention is drawn to the Normative references cited in this publication. Use of the referenced publications is indispensable for the correct application of this publication.
9) Attention is drawn to the possibility that some of the elements of this IEC Publication may be the subject of patent rights. IEC shall not be held responsible for identifying any or all such patent rights.

iTeh STANDARD PREVIEW
(standards.iteh.ai)
IEC 61169-37:2007
https://standards.iteh.ai/catalog/standards/sist/9c702a15-e568-4777-88b2-7abeaf1d5dd7/iec-61169-37-2007

International Standard IEC 61169-37 has been prepared by subcommittee 46F: R.F. and microwave passive components, of IEC technical committee 46: Cables, wires, waveguides, R.F. connectors, R.F. and microwave passive components and accessories.

This bilingual version (2016-11) corresponds to the monolingual English version, published in 2007-02.

The text of this standard is based on the following documents:

CDV	Report on voting
46F/44/CDV	46F/49/RVC

Full information on the voting for the approval of this standard can be found in the report on voting indicated in the above table.

The French version of this standard has not been voted upon.

This publication has been drafted in accordance with the ISO/IEC Directives, Part 2.

A list of all parts of the IEC 61169 series, under the general title *Radio frequency connectors*, can be found on the IEC website.

The QC numbers that appear on the front cover of this publication are the specification numbers in the IEC Quality Assessment System for Electronic Components (IECQ).

The committee has decided that the contents of this publication will remain unchanged until the maintenance result date indicated on the IEC web site under "http://webstore.iec.ch" in the data related to the specific publication. At this date, the publication will be

- reconfirmed,
- withdrawn,
- replaced by a revised edition, or
- amended.

IMPORTANT – The 'colour inside' logo on the cover page of this publication indicates that it contains colours which are considered to be useful for the correct understanding of its contents. Users should therefore print this document using a colour printer.

iTeh STANDARD PREVIEW
(standards.iteh.ai)
IEC 61169-37:2007
https://standards.iteh.ai/catalog/standards/sist/9c702a15-e568-4777-88b2-7a6cef1d54d7/iec-61169-37-2007

RADIO-FREQUENCY CONNECTORS –

Part 37: Sectional specification – STWX8 R.F. connectors

1 Scope

This part of IEC 61169, which is a Sectional Specification (SS), provides information and rules for the preparation of Detail Specifications (DS) for type STWX8 R.F. coaxial connectors with push-pull self-lock coupling.

The connectors are normally used with flexible and semi-rigid R.F. cables for middle power applications in conjunction with 50 Ω cables in an operating frequency range up to 4 GHz.

It describes the interface dimensions for general purpose grade 2 connectors, dimensional details for standard test connectors, grade 0, together with gauging information and the mandatory tests selected from QC 220000 (IEC 61169-1), applicable to all DS relating to type STWX8 connectors.

This specification indicates the recommended performance characteristics to be considered when writing a DS and covers test schedules and inspection requirements.

iTeh STANDARD PREVIEW
(standards.iteh.ai)

2 Normative references

IEC 61169-37:2007
https://standards.iteh.ai/catalog/standards/sist/0e702e15-e568-4777-88c2-7a6cefc154d7/iec-61169-37-2007

The following referenced documents are indispensable for the application of this document. For dated references, only the edition cited applies. For undated references, the latest edition of the referenced document (including any amendments) applies.

IEC 60096 (all parts), *Radio-frequency cables*

IEC 61169-1:1992, *Radio-frequency connectors – Part 1: Generic specification – General requirements and measuring methods*
Amendment 1 (1996)
Amendment 2 (1997)

3 Mating face and gauge information

3.1 Dimensions – General connectors – Grade 2 (Figure 1)

All dimensions are in mm. All un-dimensioned pictorial configurations are for reference purpose only.

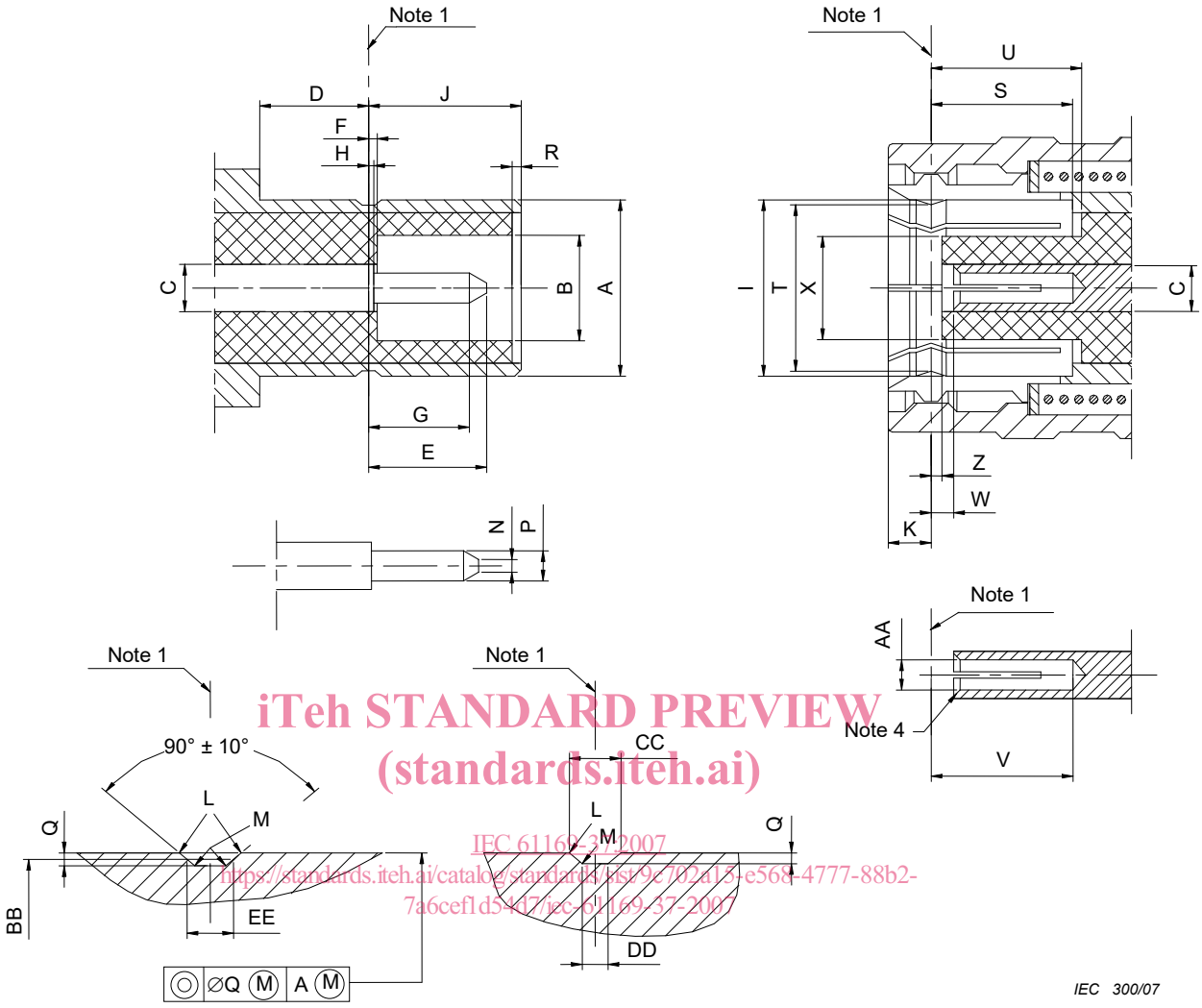

iTeh STANDARD PREVIEW
(standards.iteh.ai)
IEC 61169-37:2007
https://standards.iteh.ai/catalog/standards/sist/9c702a15-e568-4777-88b2-7a6cef1d5417/iec-61169-37-2007

Figure 1 – Mating face of STWX8 connectors
(for dimensions and notes, see Table 1)

Table 1 – Mating face dimensions

Reference	mm		Notes
	Min.	Max.	
A	8,12	8,20	Diameter
B	4,83	-----	Diameter
C	2,06	2,21	Diameter
D	4,0	-----	
E	5,33	5,84	
F	------	0,18	
G	4,5	------	
H	-----	0,18	
I	8,22	8,28	Diameter
J	6,90	7,00	
K	------	2,20	
L	0,05	0,15	Radius
M	------	0,13	Radius
N	------	0,64	Diameter
P	1,32	1,37	Diameter
Q	0,19	0,25	
R	0,00	0,30	
S	7,05	------	
T	------	-----	Diameter (see Note 2)
U	7,05	-----	
V	6,00	------	
W	0,18	------	
X	------	4,72	Diameter
Z	0,18	------	
AA	-------	------	Diameter (see Note 3)
BB	7,92	8,02	Diameter
CC	1,22	1,42	
DD	0,72	0,92	
EE	1,10		Nominal

NOTE 1 Reference plane: mechanical and electrical.

NOTE 2 To meet electrical and mechanical requirements.

NOTE 3 Bore diameter closed to meet electrical and mechanical requirements when mated with a 1,32/1,37 diameter.

iTeh STANDARD PREVIEW
(standards.iteh.ai)
IEC 61169-37:2007
https://standards.iteh.ai/catalog/standards/sist/9c702a15-e568-4777-88b2-7a6cef1d54d7/iec-61169-37-2007

3.2 Gauges for general purpose connectors – Grade 2

All dimensions are in mm. All undimensioned pictorial configurations are for reference purposes only.

3.2.1 Gauges for socket contact

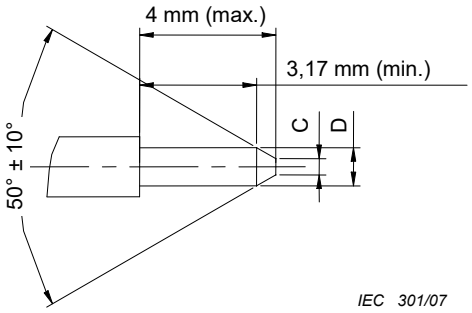

Figure 2 – Gauge pins for contact of socket connectors
(for dimensions, see Table 2)

Table 2 – Gauges dimensions

Reference	Gauge A – Maximum material for sizing purposes		Gauge B – Minimum material for measurement of gauge retention force Mass of gauge: (80 ± 1) g	
	mm		mm	
	min.	max.	min.	max.
D	1,370	1,375	1,315	1,320
C	0	0,64	-----	-----
Material: steel, polished. Surface roughness: Ra = 0,4 µm maximum.				

iTeh STANDARD PREVIEW
(standards.iteh.ai)
IEC 61169-37:2007
https://standards.iteh.ai/catalog/standards/sist/9c702a15-e568-4777-88b2-7a6cef1d54d7/iec-61169-37-2007

Test procedure

According to 9.3.4 of IEC 61169-1, the gauge A shall be inserted three times into the socket center contact. This is a sizing operation.

After this, the gauge B shall be inserted into socket centre contact. The contact shall support the mass of the gauge in a vertical downward attitude.

NOTE The minimum diameter of gauge A corresponds to the maximum diameter of a male contact.

3.2.2 Gauges for female outer contact

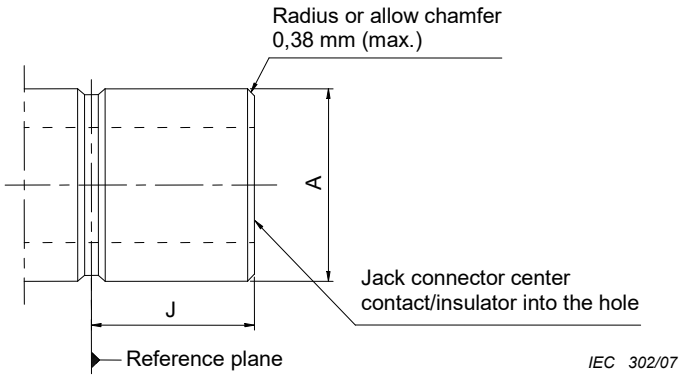

(A) General dimensions

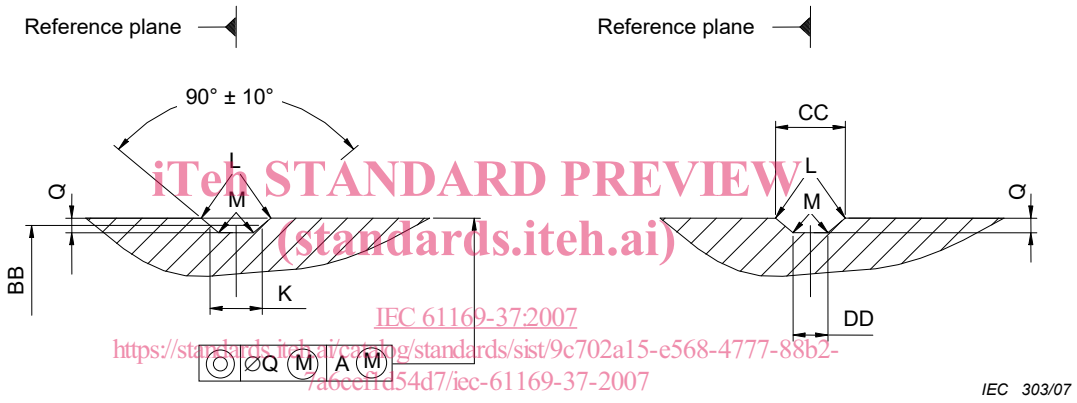

iTeh STANDARD PREVIEW
(standards.iteh.ai)
IEC 61169-37:2007
https://standards.iteh.ai/catalog/standards/sist/9c702a15-e568-4777-88b2-7a6ceffd54d7/iec-61169-37-2007

(B) Alternative coupling grooves

Figure 3 – Gauge for outer of socket connectors
(for dimensions, see Table 3)

Table 3 – Gauge dimensions

Reference	Gauge C-Maximum material for sizing purpose		Gauge D-Minimum material for measurement of gauge retention force	
	mm		mm	
	min.	max.	min.	max.
A	8,185	8,20	8,12	8,135
J	7,05	7,15	7,05	7,15
K	1,1		1,1	
Rad.L	0,05	0,15	0,05	0,15
RadM	----	0,13	-----	0,13
Q	0,2	0,25	0,15	0,20
BB	7,95	7,98	7,95	7,98
CC	1,2	1,4	1,1	1,3
DD	0,6	0,8	0,5	0,7
Material: polished steel. Surface roughness: Ra = 0,4 µm max.				

Test procedure

iTeh STANDARD PREVIEW
(standards.iteh.ai)

According to 9.3.4 of IEC 61169-1, the gauge C shall be placed three times inside the outer contact. This is a sizing operation.

IEC 61169-37:2007
https://standards.iteh.ai/catalog/standards/sist/9c702a15-e568-4777-88b2-7a6cef1d54d7/iec-61169-37-2007

The gauge D is placed inside the outer contact. The retention force of the gauge shall be 15 N minimum.

3.3 Dimensions – standard test connectors – Grade 0

3.3.1 Socket (female contact)

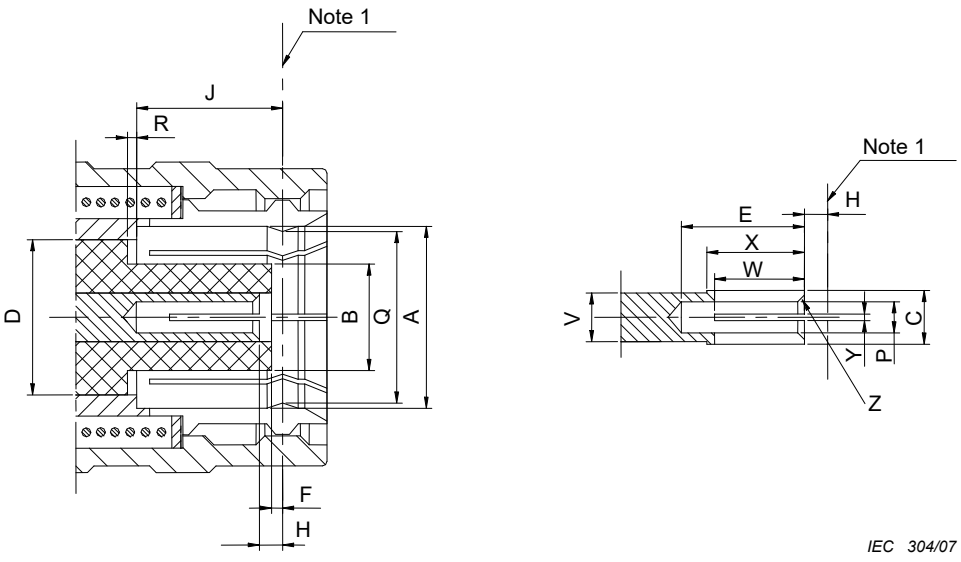

Figure 4 – Female contact
(for dimensions and notes, see Table 4)

Table 4 – Female contact dimensions

Reference	mm		Notes
	min.	max.	
A	8,22	8,25	Diameter
B	4,67	4,72	see Note 3/Diameter
C	2,16	2,18	see Note 4/Diameter
D	—	—	see Note 2/Diameter
E	6	—	
F	0,27	0,52	
H	0,29	0,57	
J	7,05	7,20	
P	1,39	1,41	Diameter
Q	7,78	7,82	
R	0	0,30	
V	2,13	2,18	Diameter
W	4,62	4,88	
X	6,05	6,10	
Y	0,18	0,23	
Z	0,15	0,25	

iTeh STANDARD PREVIEW
(standards.iteh.ai)

NOTE 1 Reference plane: mechanical and electrical.

NOTE 2 Diameter of outer conductor and length of uniform section of transmission line to give required characteristic impedance of 50 Ω when checked using time domain reflectometer methods.

IEC 61169-37:2007
https://standards.iteh.ai/catalog/standards/sist/9c702a15-e568-4777-88b2-7a6ceffd54d7/iec-61169-37-2007

NOTE 3 Dimension for use of PTFE dielectric having a dielectric constant of 2,02. Use of PTFE is mandatory.

NOTE 4 Bore diameter closed to meet electrical and mechanical requirements when mated with a 1,35/1,37 diameter.

3.3.2 Plug (male contact)

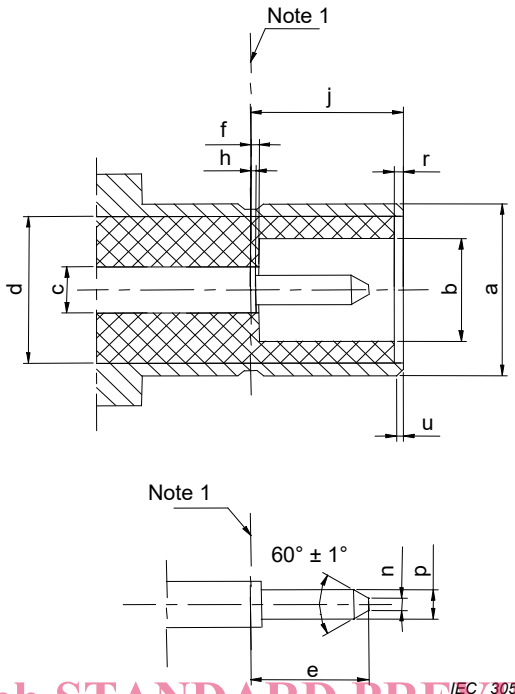

iTeh STANDARD PREVIEW
(standards.iteh.ai)

Figure 5 – Male contact
(for dimensions and notes, see Table 5)

IEC 61169-37:2007
https://standards.iteh.ai/catalog/standards/sist/9c702a15-e568-4777-88b2-7a6ccef1d54d7/iec-61169-37-2007

Table 5 – Male contact dimensions

Reference	mm		Notes
	min.	max.	
a	8,15	8,20	Diameter
b	4,88	4,93	see Note 3/Diameter
c	2,13	2,18	see Note 2/Diameter
d	—	—	see Note 2/Diameter
e			
f	0,04	0,24	
h	—	0,09	
j	6,95	7,00	
n	—	0,30	
p	1,35	1,37	Diameter
r	0	0,20	Diameter
u	0,10	0,20	

NOTE 1 Reference plane: mechanical and electrical.

NOTE 2 Diameter of outer conductor and length of uniform section of transmission line to give required characteristic impedance of 50Ω when checked using time domain reflectometer methods.

NOTE 3 Dimension for use of PTFE dielectric having a dielectric constant of 2,02. Use of PTFE is mandatory.

4 Quality assessment procedure

4.1 General

The following subclauses provide recommended rating, performance and test conditions to be considered when writing a Detail Specification (DS). They also provide an appropriate schedule of tests with the pro-formal blank detail specification and instructions for the preparation of a detail specification.

4.2 Rating and characteristics (see Clause 6 of IEC 61169-1 (QC 220000))

The values indicated below are recommended for type STWX8 connectors and are given for the writer of the detail specification (see Table 6). They are applicable to the condition when the connectors are fully mated.

Certain tests will usually not be required. When these tests are required appropriate values shall be entered in the detail specification at the discretion of the specification writer.

iTeh STANDARD PREVIEW
(standards.iteh.ai)
IEC 61169-37:2007
https://standards.iteh.ai/catalog/standards/sist/9c702a15-e568-4777-88b2-7a6cef1d54d7/iec-61169-37-2007