IEC 60512-25-9

Edition 1.0 2008-08

INTERNATIONAL STANDARD

NORME INTERNATIONALE

Connectors for electronic equipment – Tests and measurements – Part 25-9: Signal integrity tests – Test 25i: Alien crosstalk

iTeh STANDARD PREVIEW
(standards.iteh.ai)

Connecteurs pour équipements électroniques – Essais et mesures – Partie 25-9: Essais d'intégrité des signaux – Essai 25i: Diaphonie exogène

IEC 60512-25-9:2008
https://standards.iteh.ai/catalog/standards/sist/99dcbfbc-6428-4e43-9c4f-73b406b9a2dc/iec-60512-25-9-2008



IEC 60512-25-9:2008

THIS PUBLICATION IS COPYRIGHT PROTECTED

Copyright © 2008 IEC, Geneva, Switzerland

All rights reserved. Unless otherwise specified, no part of this publication may be reproduced or utilized in any form or by any means, electronic or mechanical, including photocopying and microfilm, without permission in writing from either IEC or IEC's member National Committee in the country of the requester.
If you have any questions about IEC copyright or have an enquiry about obtaining additional rights to this publication, please contact the address below or your local IEC member National Committee for further information.

Droits de reproduction réservés. Sauf indication contraire, aucune partie de cette publication ne peut être reproduite ni utilisée sous quelque forme que ce soit et par aucun procédé, électronique ou mécanique, y compris la photocopie et les microfilms, sans l'accord écrit de la CEI ou du Comité national de la CEI du pays du demandeur.
Si vous avez des questions sur le copyright de la CEI ou si vous désirez obtenir des droits supplémentaires sur cette publication, utilisez les coordonnées ci-après ou contactez le Comité national de la CEI de votre pays de résidence.

IEC Central Office
3, rue de Varembé
CH-1211 Geneva 20
Switzerland
Email: inmail@iec.ch
Web: www.iec.ch

About the IEC

The International Electrotechnical Commission (IEC) is the leading global organization that prepares and publishes International Standards for all electrical, electronic and related technologies.

About IEC publications

The technical content of IEC publications is kept under constant review by the IEC. Please make sure that you have the latest edition, a corrigenda or an amendment might have been published.

- Catalogue of IEC publications: www.iec.ch/searchpub

The IEC on-line Catalogue enables you to search by a variety of criteria (reference number, text, technical committee,…). It also gives information on projects, withdrawn and replaced publications.

- IEC Just Published: www.iec.ch/online_news/justpub

Stay up to date on all new IEC publications. Just Published details twice a month all new publications released. Available on-line and also by email.

- Electropedia: www.electropedia.org

The world's leading online dictionary of electronic and electrical terms containing more than 20 000 terms and definitions in English and French, with equivalent terms in additional languages. Also known as the International Electrotechnical Vocabulary online.

- Customer Service Centre: www.iec.ch/webstore/custserv

If you wish to give us your feedback on this publication or need further assistance, please visit the Customer Service Centre FAQ or contact us:
Email: csc@iec.ch
Tel.: +41 22 919 02 11
Fax: +41 22 919 03 00

iTeh STANDARD PREVIEW
(standards.iteh.ai)
IEC 60512-25-9:2008
https://standards.iteh.ai/catalog/standards/sist/99dcbfbc-6428-4e45-9c4f-73b406b9a2dc/iec-60512-25-9-2008

A propos de la CEI

La Commission Electrotechnique Internationale (CEI) est la première organisation mondiale qui élabore et publie des normes internationales pour tout ce qui a trait à l'électricité, à l'électronique et aux technologies apparentées.

A propos des publications CEI

Le contenu technique des publications de la CEI est constamment revu. Veuillez vous assurer que vous possédez l'édition la plus récente, un corrigendum ou amendement peut avoir été publié.

- Catalogue des publications de la CEI: www.iec.ch/searchpub/cur_fut-f.htm

Le Catalogue en-ligne de la CEI vous permet d'effectuer des recherches en utilisant différents critères (numéro de référence, texte, comité d'études,…). Il donne aussi des informations sur les projets et les publications retirées ou remplacées.

- Just Published CEI: www.iec.ch/online_news/justpub

Restez informé sur les nouvelles publications de la CEI. Just Published détaille deux fois par mois les nouvelles publications parues. Disponible en-ligne et aussi par email.

- Electropedia: www.electropedia.org

Le premier dictionnaire en ligne au monde de termes électroniques et électriques. Il contient plus de 20 000 termes et définitions en anglais et en français, ainsi que les termes équivalents dans les langues additionnelles. Egalement appelé Vocabulaire Electrotechnique International en ligne.

- Service Clients: www.iec.ch/webstore/custserv/custserv_entry-f.htm

Si vous désirez nous donner des commentaires sur cette publication ou si vous avez des questions, visitez le FAQ du Service clients ou contactez-nous:
Email: csc@iec.ch
Tél.: +41 22 919 02 11
Fax: +41 22 919 03 00

IEC 60512-25-9

Edition 1.0 2008-08

INTERNATIONAL STANDARD

NORME INTERNATIONALE

Connectors for electronic equipment – Tests and measurements – Part 25-9: Signal integrity tests – Test 25i: Alien crosstalk

iTeh STANDARD PREVIEW
(standards.iteh.ai)

Connecteurs pour équipements électroniques – Essais et mesures – Partie 25-9: Essais d'intégrité des signaux – Essai 25i: Diaphonie exogène

IEC 60512-25-9:2008
https://standards.iteh.ai/catalog/standards/sist/73b406b9a2dc-60512-25-9-2008
73b406b9a2dc/iec-60512-25-9-2008

INTERNATIONAL ELECTROTECHNICAL COMMISSION

COMMISSION ELECTROTECHNIQUE INTERNATIONALE

PRICE CODE
CODE PRIX

R

ICS 31.220.10

ISBN 2-8318-9971-0

® Registered trademark of the International Electrotechnical Commission
Marque déposée de la Commission Electrotechnique Internationale

CONTENTS

FOREWORD 3
1 Scope and object 5
2 Normative references 5
3 Terms and definitions 5
4 Overview 6
4.1 Procedure 6
4.2 Resources 7
5 Overall test arrangement 7
5.1 General 7
5.2 Terminations 8
5.3 Pairs of connectors to test 8
6 Procedure to test alien crosstalk from one connector to another connector 10
6.1 Calibration 10
6.2 Measurement (noise) floor 10
6.3 Alien crosstalk measurement 10
7 Procedure for determining significance 11
8 Details to be specified in the detail specification 12
9 Power sum calculation, report and documentation 12
Annex A (informative) Flow chart for obtaining alien crosstalk performance data 13
Annex B (informative) Illustrations of alien crosstalk testing using coaxial switching 14
Bibliography 18
Figure 1 – Schematic for testing without a switch 8
Figure 2 – Schematic for terminations 8
Figure 3 – Connector array 9
Figure 4 – Test directions 11
Figure A.1 – Flowchart for the test procedure 13
Figure B.1 – Schematic for testing with a switch 14
Figure B.2 – Example network analyzer, switch, and fixture with 8 baluns in 2 clusters 15
Figure B.3 – Example of fixture, in which balun clusters can slide left and right 16
Figure B.4 – Post can rotate three different directions 17

iTeh STANDARD PREVIEW
(standards.iteh.ai)
IEC 60512-25-9:2008
https://standards.iteh.ai/catalog/standards/sist/99dcbfbc-6428-4e45-9c4f-73b406b9a2dc/iec-60512-25-9-2008

INTERNATIONAL ELECTROTECHNICAL COMMISSION

CONNECTORS FOR ELECTRONIC EQUIPMENT – TESTS AND MEASUREMENTS –

Part 25-9: Signal integrity tests – Test 25i: Alien crosstalk

FOREWORD

1) The International Electrotechnical Commission (IEC) is a worldwide organization for standardization comprising all national electrotechnical committees (IEC National Committees). The object of IEC is to promote international co-operation on all questions concerning standardization in the electrical and electronic fields. To this end and in addition to other activities, IEC publishes International Standards, Technical Specifications, Technical Reports, Publicly Available Specifications (PAS) and Guides (hereafter referred to as "IEC Publication(s)"). Their preparation is entrusted to technical committees; any IEC National Committee interested in the subject dealt with may participate in this preparatory work. International, governmental and non-governmental organizations liaising with the IEC also participate in this preparation. IEC collaborates closely with the International Organization for Standardization (ISO) in accordance with conditions determined by agreement between the two organizations.
2) The formal decisions or agreements of IEC on technical matters express, as nearly as possible, an international consensus of opinion on the relevant subjects since each technical committee has representation from all interested IEC National Committees.
3) IEC Publications have the form of recommendations for international use and are accepted by IEC National Committees in that sense. While all reasonable efforts are made to ensure that the technical content of IEC Publications is accurate, IEC cannot be held responsible for the way in which they are used or for any misinterpretation by any end user.
4) In order to promote international uniformity, IEC National Committees undertake to apply IEC Publications transparently to the maximum extent possible in their national and regional publications. Any divergence between any IEC Publication and the corresponding national or regional publication shall be clearly indicated in the latter.
5) IEC provides no marking procedure to indicate its approval and cannot be rendered responsible for any equipment declared to be in conformity with an IEC Publication.
6) All users should ensure that they have the latest edition of this publication.
7) No liability shall attach to IEC or its directors, employees, servants or agents including individual experts and members of its technical committees and IEC National Committees for any personal injury, property damage or other damage of any nature whatsoever, whether direct or indirect, or for costs (including legal fees) and expenses arising out of the publication, use of, or reliance upon, this IEC Publication or any other IEC Publications.
8) Attention is drawn to the Normative references cited in this publication. Use of the referenced publications is indispensable for the correct application of this publication.
9) Attention is drawn to the possibility that some of the elements of this IEC Publication may be the subject of patent rights. IEC shall not be held responsible for identifying any or all such patent rights.

iTeh STANDARD PREVIEW
(standards.iteh.ai)
IEC 60512-25-9:2008
https://standards.iteh.ai/catalog/standards/sist/0016df8e-6d0b-4c15-9e5f-73b406b9a2dc/iec-60512-25-9-2008

International Standard IEC 60512-25-9 has been prepared by subcommittee 48B: Connectors, of IEC technical committee 48: Electromechanical components and mechanical structures for electronic equipment.

The text of this standard is based on the following documents:

FDIS	Report on voting
48B/1915/FDIS	48B/1930/RVD

This publication has been drafted in accordance with the ISO/IEC Directives, Part 2.

A list of all parts of IEC 60512 series, under the general title *Connectors for electronic equipment – Tests and measurements*, can be found on the IEC website.

The committee has decided that the contents of this publication will remain unchanged until the maintenance result date indicated on the IEC web site under "http://webstore.iec.ch" in the data related to the specific publication. At this date, the publication will be

- reconfirmed,
- withdrawn,
- replaced by a revised edition, or
- amended.

iTeh STANDARD PREVIEW
(standards.iteh.ai)
IEC 60512-25-9:2008
https://standards.iteh.ai/catalog/standards/sist/99dcbfbc-6428-4e45-9c4f-73b406b9a2dc/iec-60512-25-9-2008

CONNECTORS FOR ELECTRONIC EQUIPMENT – TESTS AND MEASUREMENTS –

Part 25-9: Signal integrity tests – Test 25i: Alien crosstalk

1 Scope and object

This part of IEC 60512 defines a test method which is intended to assess the near-end alien crosstalk (ANEXT) and the far-end alien crosstalk (AFEXT) between connectors in close proximity, when mounted in their mounting systems. Both discrete modular connectors and multi-port panel connectors may be tested using this method. This method provides a means to test the alien (exogenous) crosstalk between any two ports, as well as a means to assess the overall alien crosstalk from all other ports. This test procedure is generally applicable to any electrical connector, and is particularly suitable to connectors described in IEC 60603-7 series, IEC 61076-3-104, and other types of connectors for data transmission.

2 Normative references

iTeh STANDARD PREVIEW
(standards.iteh.ai)

The following referenced documents are indispensable for the application of this document. For dated references, only the edition cited applies. For undated references, the latest edition of the referenced document (including any amendments) applies.

IEC 60050-581, *International Electrotechnical Vocabulary (IEV) – Chapter 581: Electromechanical components for electronic equipment*

IEC 60512-25-9:2008
https://standards.iteh.ai/catalog/standards/sist/dcbfbc-6428-4e45-9c4f-73b406b9a2dc/iec-60512-25-9-2008

IEC 60512-26-100, *Connectors for electronic equipment – Tests and measurement – Part 26-100: Measurement setup, test and reference arrangements and measurements for connectors according to IEC 60603-7 (tests 26a to 26g)*

IEC 60603-7-4:2005, *Connectors for electronic equipment – Part 7-4: Detail specification for 8-way, unshielded, free and fixed connectors, for data transmissions with frequencies up to 250 MHz*

IEC 60603-7 (all parts), *Connectors for electronic equipment – Part 7: Detail specifications for 8-way, (un)shielded, free and fixed connectors, for data transmissions*

IEC 61076-3-104:2006, *Connectors for electronic equipment – Part 3-104: Detail specification for 8-way, shielded, free and fixed connectors, for data transmissions with frequencies up to 1000 MHz*

IEC 61156, *Multicore and symmetrical pair/quad cable for digital communications*

3 Terms and definitions

For the purposes of this document, the terms and definitions given in IEC 60050-581 apply as well as the following.

3.1
alien (exogenous) crosstalk (AXT)
signal coupling from disturbing conductor pairs into a disturbed pair of another connector

3.2
alien (exogenous) near-end crosstalk (ANEXT) loss
signal coupling from a near-end disturbing conductor pair into a disturbed pair of another connector, measured at the near-end

3.3
alien (exogenous) far-end crosstalk (AFEXT) loss
signal coupling from a near-end disturbing conductor pair into a disturbed pair of another connector, measured at the far-end

3.4
power sum alien (exogenous) near-end crosstalk (PSANEXT) loss
a computation of signal coupling from multiple near-end disturbing conductor pairs, in one or more connectors, into a disturbed pair of another connector, measured at the near-end

3.5
power sum alien (exogenous) far-end crosstalk (PSAFEXT) loss
a computation of signal coupling from multiple near-end disturbing conductor pairs, in one or more connectors, into a disturbed pair of another connector, measured at the far-end

4 Overview

4.1 Procedure

iTeh STANDARD PREVIEW
(standards.iteh.ai)

Alien crosstalk is a property that exists between connectors. It is affected by the properties of the connectors themselves, as well as the arrangement of the connectors in their mounting system, and the mounting systems themselves. Examples of mounting systems include faceplates, mounting boxes, frame-mounted panels, frames containing multiple panels, etc. Where necessary, connectors in other frame-mounted panels, etc., in close proximity shall be included as disturbing connectors. Alien crosstalk of the connector should be tested for all mounting systems in which the connector is intended to be mounted, or a sub-set thereof, as defined by the detail specification. Manufacturers may define a worst case mounting system, and test in either or both.

IEC 60512-25-9:2008
https://standards.iteh.ai/catalog/standards/sist/994cb1bc-6478-4e45-9c4f-73b406b9a2dc/iec-60512-25-9-2008

This procedure may also be applied to multi-port connector panels, in which case each port of the panel shall be treated as a discrete connector.

The mounting systems shall be filled, at a minimum, with all connectors that are significant in respect to the alien crosstalk of the disturbed connector. The number of connectors that need to be tested is explained in 5.3 and Clause 7. As there are generally four conductor pairs in each connector, and therefore 16 pair combinations for each port combination, consideration should be given for a convenient method for testing those combinations, such as automatic switching. Further, the interconnection method between the baluns and the CUT (connectors under test) should provide sufficient flexibility to easily connect the baluns to different CUTs. As the devices need to be terminated with cables, a minimum of two cables, each at least 40 m long, shall be available, and for convenience consideration should be given to having a larger number of termination cables available. These cables shall be separated as far as possible during the test.

The procedure to perform this test shall be as follows. The mounting system for the connectors shall be set up near the measurement system. The connectors shall be installed in the mounting system. One connector shall be selected as the disturbed connector for a particular instance of this test. Another connector shall be selected as the first disturbing connector. The two connectors shall be terminated and connected to the measurement system as specified in Clause 6. The ANEXT loss and AFEXT loss, as required, shall be measured, between these connectors, as specified in Clause 6. The significance of the alien crosstalk, for each frequency point of each pair combination, shall be checked, per Clause 7. A determination shall be made, per Clause 7, whether additional disturbing connectors need to be tested for this disturbed connector. Testing shall continue until all significant disturbing connectors have been

tested, per 5.3 and Clause 7. Then, the power sum of all significant pair-to-pair measurements shall be calculated, per Clause 9. Finally, a report shall be written per Clause 9. If required, additional disturbed connectors, and additional mounting arrangements, may be tested.

The preceding paragraph provides the procedure by which all the necessary information shall be obtained. The steps may be performed in any order.

Annex A illustrates the above.

4.2 Resources

The measurements shall be performed using a network analyzer, or with a signal generator and receiver.

The required equipment includes:

a) A network analyzer with a minimum frequency range of 1 MHz to 1 GHz shall preferably be used. A signal generator and a receiver may also be used.

b) If baluns are used, a minimum of 2 baluns meeting the requirements of IEC 60603-7-4, Annex D, extrapolated to the highest frequency of interest (8 baluns are recommended).

c) A minimum of 2 cables, minimum 40 m long, suitable for terminating all pairs of the far ends of the connectors under test. These shall be minimum category 6, IEC 61156 cables. For category 7 or better connectors, the terminating cables shall be the same or higher category as the connectors. Their return loss and balance should be as good as possible, to provide the best possible connector termination. Consideration should be given to the use of a larger number of cables. Cables are needed for both the cable termination (fixed) end, and the free (plug) end, of the connector;

iTeh STANDARD PREVIEW
(standards.iteh.ai)
IEC 60512-25-9:2008
https://standards.iteh.ai/catalog/standards/sist/99dc0fdc-6428-4e45-9c4f-73b406b9a2dc/iec-60512-25-9-2008

NOTE It should be recognized that each time the cable is used to terminate one connector, it will shorten by approximately 50 mm.

d) Two short "plugs", or cables, or "wiring harnesses", to connect from the baluns to the near ends of the devices under test.

e) A means to provide 100 Ω differential, and 50 Ω common, mode terminations, on all unused pairs of both ends of the connectors under test; discrete precision surface-mount resistors are recommended.

f) At least one sample of each connector mounting system in which the connectors are to be tested.

g) A sufficient number of samples of the connector to be tested. It is recommended to have enough to completely fill the mounting system.

h) Coaxial cables to interconnect between the network analyzer and the baluns. It is recommended to use high quality phase-stable cables.

i) It is recommended to have a convenient mounting system, to arrange the recommended 8 baluns into two groups of four.

j) It is recommended to have an automatic switching system to change among the 16 pair combinations.

5 Overall test arrangement

5.1 General

It is recommended to use eight baluns, arranged in two clusters of four, and to minimize the separation of the baluns within each balun cluster. In this case, it is advantageous to use a multi-port (minimum 8 ports) coaxial switch, to automate testing. The schematic for the use of such a switch is shown in Annex B. Figure 1 shows a schematic for testing without a switch.

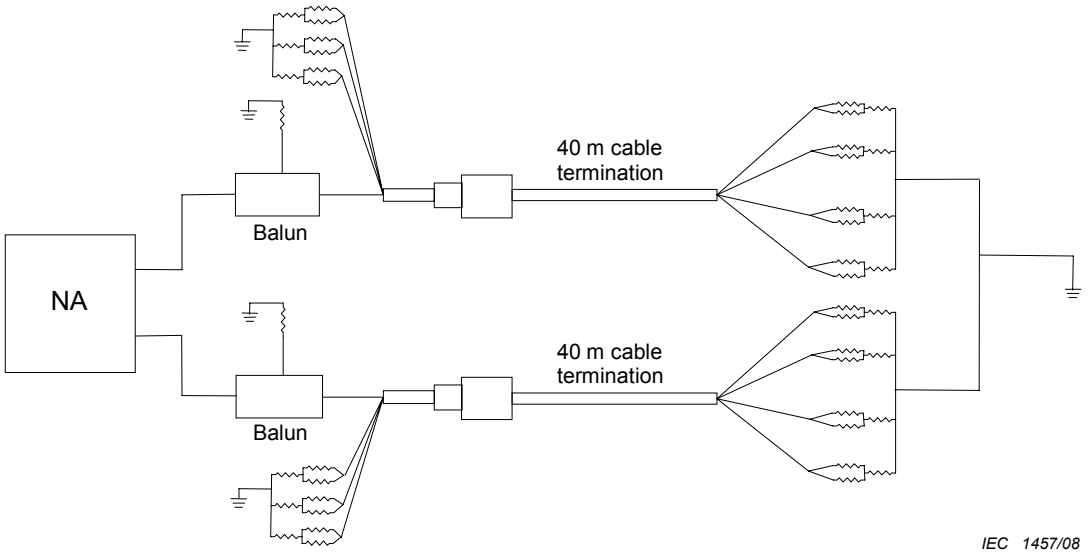

Key

NA Network analyzer

iTeh STANDARD PREVIEW

Figure 1 – Schematic for testing without a switch

(standards.iteh.ai)

5.2 Terminations

IEC 60512-25-9:2008
https://standards.iteh.ai/catalog/standards/sist/09dcbfbc-6428-4e45-9c4f-73b40f6b9c24/iec-60512-25-9-2008

For measurement (noise) floor measurements, and for all ANEXT and AFEXT measurements, both ends of all pairs of both connectors under test shall be terminated with common and differential mode terminations per IEC 60603-7-4, Clause D.6 or per 3.4 of IEC 60512-26-100. The pair ends under test shall be terminated through the baluns, with a 50 Ω coaxial cable on the differential input, and a 50 Ω termination resistor on the centre tap. Unused pairs on these ends may be terminated either with baluns and terminating resistors, or with precision resistor networks. Screens and/or shields, if present, shall also be connected to this same node. The termination cables shall be separated as far as possible during the test.

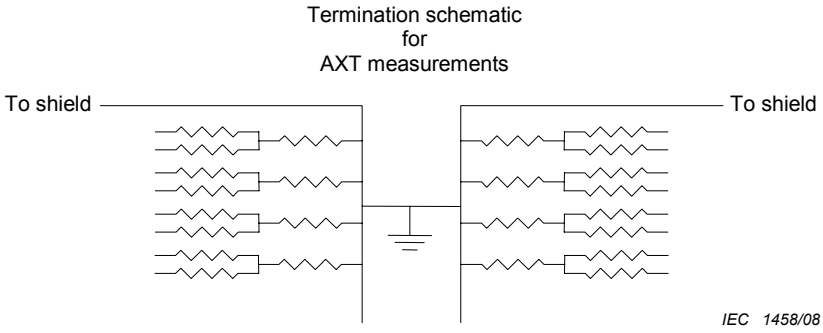

Figure 2 – Schematic for terminations

5.3 Pairs of connectors to test

At a minimum, all connectors adjacent to the disturbed connector, in all directions including diagonal directions, shall be tested in combination with that connector. Figure 3 illustrates an array. If any disturbing connector is deemed "significant" per Clause 7, then the next further away connector in the same direction from the disturbed connector shall also be tested.

Testing of disturbing connectors in this direction from the disturbed connector shall continue, until a connector is tested which is not "significant". At this point, no further connectors in this direction away from the disturbed connector need to be tested.

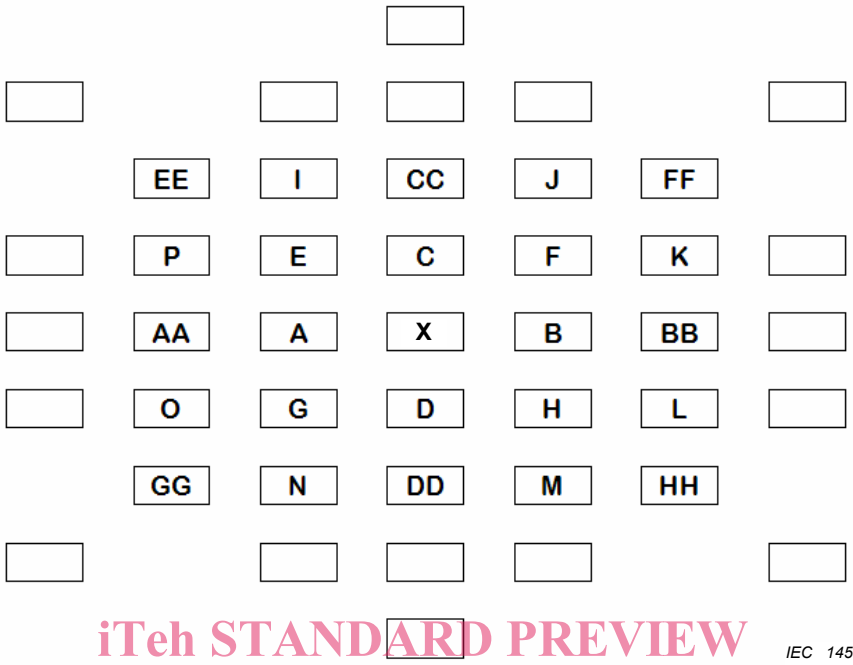

iTeh STANDARD PREVIEW
(standards.iteh.ai)

Figure 3 – Connector array

IEC 60512-25-9:2008
https://standards.iteh.ai/catalog/standards/sist/99dcbfbc-6428-4e45-9c4f-73b406b9a2dc/iec-60512-25-9-2008

Notes to Figure 3	
NOTE 1	If the mounting hardware is smaller than this array, those positions which are not present are ignored. However, the influences of other mounting systems in close proximity of the system under test shall be taken into account.
NOTE 2	In this example, when the disturbed connector "X" is tested, alien crosstalk into it from connectors A, B, C, D, E, F, G, and H, shall be tested. In the event that connector B contributes significant alien crosstalk, the alien crosstalk from connector BB into connector X shall also be tested. In the event that connector BB also contributes significant alien crosstalk, the alien crosstalk from connector BBB (not labelled) into connector X shall also be tested, etc.
NOTE 3	In this example, if either connector F or connector CC contributes significant alien crosstalk into connector X, the alien crosstalk from connector J into connector X shall also be tested.
NOTE 4	Although rectangular connectors are illustrated in this example, the same principle can be applied to connectors which are round, square, trapezoidal, or otherwise shaped.
NOTE 5	This is an example for illustration purposes; mounting hardware used is not required to conform to this illustration.

If required, other connectors in the mounting system may also be tested as the disturbed connector. It is suggested that, at a minimum, at least one connector in the most vulnerable position, such as the middle, be tested.

When the connector to be tested is a ganged connector, such as a multi-port patch panel, special considerations apply. The cable (rear) side of the panel should be inspected, and connector ports which may not be near the disturbed connector on the front side, but are near on the back, should be tested. Consideration should be given to testing at least two ports on each side of the disturbed port. Consideration should be given to testing all port combinations in the gang, as there may be internal circuit paths in close proximity.

6 Procedure to test alien crosstalk from one connector to another connector

6.1 Calibration

A minimum of 100 frequency points per decade shall be tested, and a linear frequency sweep shall be used.

For each of the 16 pair combinations between connectors, perform a 2-port calibration. It is recommended to use a zero-length through calibration, with the baluns back-to-back, however it is acceptable to use a short twisted-pair jumper as the through. It is recommended to omit the isolation calibration step. Short, load, and open calibration artefacts shall be placed at the balun output. Other calibration requirements of E.4.1 of IEC 60603-7-4 shall be followed.

6.2 Measurement (noise) floor

Two termination cables shall be connected directly to the two baluns or balun clusters. The cables shall be separated by at least 25 mm throughout their length. The far ends of the cables shall be terminated according to Clause 5 above. The ANEXT between them shall be measured. It is recommended that the noise floor be at least 100 dB throughout the frequency range.

6.3 Alien crosstalk measurement

Unless otherwise specified in the detail specification, the alien crosstalk shall be measured in both directions. To measure ANEXT in the "forward" direction 2 four-pair test cables, or "plugs" shall be used. These are to be, preferably, a short length, approximately 80 mm, and shall not be longer than 300 mm. The "front" end of these plugs shall be connected to the baluns. The four pairs shall be fanned out orthogonally, over as short a distance as possible, to connect to the baluns. This distance should be minimized, to avoid common mode return loss effects. It is recommended to manage the common mode impedance of the pairs by placing them in the vicinity of a ground plane, or by some other method. The far ends of the two connectors shall be terminated to four-pair terminating cables which are at least 40 m long. The far ends of those cables shall be terminated according to Clause 5 above. Adequate separation between the two terminating cables shall be maintained, also between the two test-cables, as cable-to-cable alien crosstalk will affect the test result.

iTeh STANDARD PREVIEW
(standards.iteh.ai)
IEC 60512-25-9:2008
https://standards.iteh.ai/catalog/standards/sist/99dcbfec-6428-4e45-9c4f-73b406b9a2dc/iec-60512-25-9-2008

Test directions diagram
for
AXT measurements

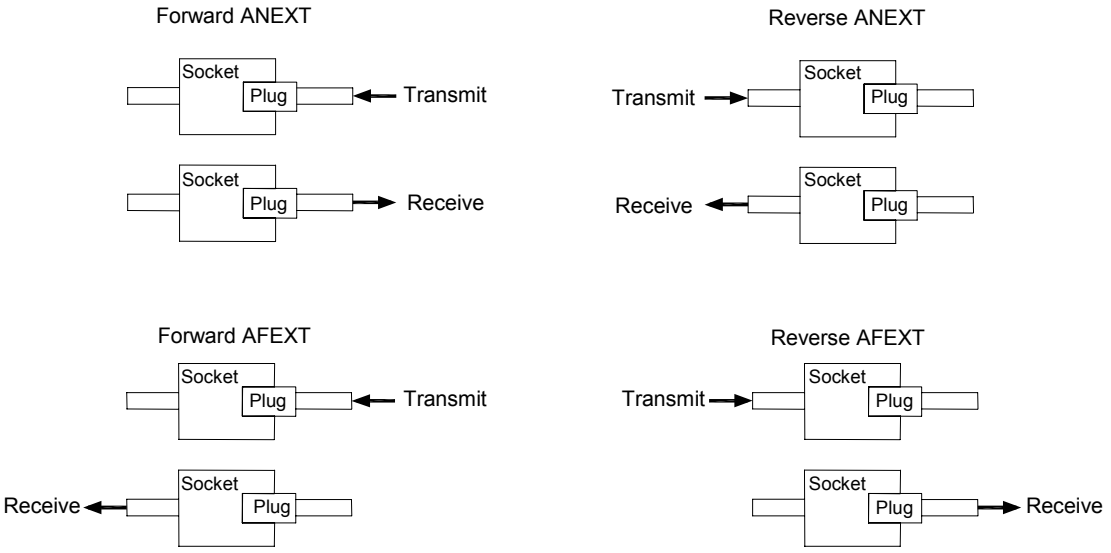

iTeh STANDARD PREVIEW
(standards.iteh.ai)

Figure 4 – Test directions

IEC 60512-25-9:2008
https://standards.iteh.ai/catalog/standards/sist/...

To measure ANEXT in the "reverse" direction, the non-plug end of the connector shall be connected to the baluns using a short (approximately 80 mm) test cable, balun interface as described above. A plug shall be mounted on the near end of the termination cable, its far end shall be terminated as in Clause 5 above; the plug and connector shall be mated.

To measure AFEXT in the "forward" direction, the disturbing connector shall be terminated as for ANEXT in the forward direction above, and the disturbed connector as in the reverse direction above. The disturbing signal shall be launched into the free end (plug end) of the disturbing connector, and the alien crosstalk shall be monitored at the cable end of the disturbed connector.

To measure AFEXT in the "reverse" direction, the disturbed connector shall be terminated as for ANEXT in the forward direction above, and the disturbing as in the reverse direction above. The disturbing signal shall be launched into the cable end of the disturbing connector, and the alien crosstalk will be monitored at the free end of the disturbed connector.

7 Procedure for determining significance

The pair-to-pair alien crosstalk trace shall be plotted and compared with the significance limit. The significance limit, unless otherwise specified in the detail specification, shall be 20 dB better than the requirement, or 90 dB, whichever is less.

If at any frequency point on any pair combination, the pair-to-pair alien crosstalk exceeds the significance limit, this disturbing connector shall be deemed "significant" to the disturbed connector.

If this disturbing connector is deemed significant, then all data at frequency points and pair combinations that exceed the limit shall be included in the power sum calculations described in