IEC 60988

Edition 2.0 2009-08

INTERNATIONAL STANDARD

NORME INTERNATIONALE

Nuclear power plants – Instrumentation important to safety – Acoustic monitoring systems for detection of loose parts: characteristics, design criteria and operational procedures

iTeh STANDARD PREVIEW
(standards.iteh.ai)
IEC 60988:2009
https://standards.iteh.ai/catalog/standards/sist/9011207d-c633-40fc-8db7-
[illegible]

Centrales nucléaires de puissance – Instrumentation importante pour la sûreté – Systèmes de surveillance acoustique pour la détection des corps errants: caractéristiques, critères de conception et procédures d'exploitation



IEC 60988:2009

THIS PUBLICATION IS COPYRIGHT PROTECTED

Copyright © 2009 IEC, Geneva, Switzerland

All rights reserved. Unless otherwise specified, no part of this publication may be reproduced or utilized in any form or by any means, electronic or mechanical, including photocopying and microfilm, without permission in writing from either IEC or IEC's member National Committee in the country of the requester.
If you have any questions about IEC copyright or have an enquiry about obtaining additional rights to this publication, please contact the address below or your local IEC member National Committee for further information.

Droits de reproduction réservés. Sauf indication contraire, aucune partie de cette publication ne peut être reproduite ni utilisée sous quelque forme que ce soit et par aucun procédé, électronique ou mécanique, y compris la photocopie et les microfilms, sans l'accord écrit de la CEI ou du Comité national de la CEI du pays du demandeur.
Si vous avez des questions sur le copyright de la CEI ou si vous désirez obtenir des droits supplémentaires sur cette publication, utilisez les coordonnées ci-après ou contactez le Comité national de la CEI de votre pays de résidence.

IEC Central Office
3, rue de Varembé
CH-1211 Geneva 20
Switzerland
Email: inmail@iec.ch
Web: www.iec.ch

About the IEC

The International Electrotechnical Commission (IEC) is the leading global organization that prepares and publishes International Standards for all electrical, electronic and related technologies.

About IEC publications

The technical content of IEC publications is kept under constant review by the IEC. Please make sure that you have the latest edition, a corrigenda or an amendment might have been published.

iTeh STANDARD PREVIEW
(standards.iteh.ai)

- Catalogue of IEC publications: www.iec.ch/searchpub

The IEC on-line Catalogue enables you to search by a variety of criteria (reference number, text, technical committee,…). It also gives information on projects, withdrawn and replaced publications.

- IEC Just Published: www.iec.ch/online_news/justpub

Stay up to date on all new IEC publications. Just Published details twice a month all new publications released. Available on-line and also by email.

IEC 60988:2009
https://standards.iteh.ai/catalog/standards/sist/9011207d-c633-40fc-8db7-d057a5a1e2e3/iec-60988-2009

- Electropedia: www.electropedia.org

The world's leading online dictionary of electronic and electrical terms containing more than 20 000 terms and definitions in English and French, with equivalent terms in additional languages. Also known as the International Electrotechnical Vocabulary online.

- Customer Service Centre: www.iec.ch/webstore/custserv

If you wish to give us your feedback on this publication or need further assistance, please visit the Customer Service Centre FAQ or contact us:
Email: csc@iec.ch
Tel.: +41 22 919 02 11
Fax: +41 22 919 03 00

A propos de la CEI

La Commission Electrotechnique Internationale (CEI) est la première organisation mondiale qui élabore et publie des normes internationales pour tout ce qui a trait à l'électricité, à l'électronique et aux technologies apparentées.

A propos des publications CEI

Le contenu technique des publications de la CEI est constamment revu. Veuillez vous assurer que vous possédez l'édition la plus récente, un corrigendum ou amendement peut avoir été publié.

- Catalogue des publications de la CEI: www.iec.ch/searchpub/cur_fut-f.htm

Le Catalogue en-ligne de la CEI vous permet d'effectuer des recherches en utilisant différents critères (numéro de référence, texte, comité d'études,…). Il donne aussi des informations sur les projets et les publications retirées ou remplacées.

- Just Published CEI: www.iec.ch/online_news/justpub

Restez informé sur les nouvelles publications de la CEI. Just Published détaille deux fois par mois les nouvelles publications parues. Disponible en-ligne et aussi par email.

- Electropedia: www.electropedia.org

Le premier dictionnaire en ligne au monde de termes électroniques et électriques. Il contient plus de 20 000 termes et définitions en anglais et en français, ainsi que les termes équivalents dans les langues additionnelles. Egalement appelé Vocabulaire Electrotechnique International en ligne.

- Service Clients: www.iec.ch/webstore/custserv/custserv_entry-f.htm

Si vous désirez nous donner des commentaires sur cette publication ou si vous avez des questions, visitez le FAQ du Service clients ou contactez-nous:
Email: csc@iec.ch
Tél.: +41 22 919 02 11
Fax: +41 22 919 03 00

IEC 60988

Edition 2.0 2009-08

INTERNATIONAL STANDARD

NORME INTERNATIONALE

Nuclear power plants – Instrumentation important to safety – Acoustic monitoring systems for detection of loose parts: characteristics, design criteria and operational procedures

iTeh STANDARD PREVIEW
(standards.iteh.ai)
IEC 60988:2009
https://standards.iteh.ai/catalog/standards/sist/...-iec-60988-2009

Centrales nucléaires de puissance – Instrumentation importante pour la sûreté – Systèmes de surveillance acoustique pour la détection des corps errants: caractéristiques, critères de conception et procédures d'exploitation

INTERNATIONAL
ELECTROTECHNICAL
COMMISSION

COMMISSION
ELECTROTECHNIQUE
INTERNATIONALE

PRICE CODE
CODE PRIX W

ICS 27.120.20

ISBN 978-2-88910-367-6

® Registered trademark of the International Electrotechnical Commission
Marque déposée de la Commission Electrotechnique Internationale

CONTENTS

FOREWORD 4
INTRODUCTION 6
1 Scope 8
2 Normative references 8
3 Terms and definitions 8
4 Purpose and description of loose parts detection 10
4.1 General 10
4.2 System definition 10
4.3 System outline 11
5 System requirements 11
5.1 Basic structure and design criteria 11
5.2 Signal acquisition 13
5.2.1 Selection and installation of the sound sensors 13
5.2.2 Preamplifiers 14
5.3 Signal processing 14
5.3.1 General 14
5.3.2 Band-pass filters 14
5.3.3 External output signal 14
5.3.4 Amplifier 14
5.4 Signal storage and signal display 15
5.4.1 Background noise monitoring 15
5.4.2 Digitisation and storage 15
5.4.3 Audio unit 16
5.4.4 Information display 16
5.5 Signal monitoring 17
5.5.1 General 17
5.5.2 Alarm level monitor 17
5.5.3 Logic element 18
5.6 Calibration 19
5.6.1 General 19
5.6.2 Mechanical functional test unit 19
5.6.3 Electrical calibration unit 19
6 Initial start-up and operation 20
6.1 System testing before initial start-up of coolant circulating pump 20
6.2 Preliminary surveillance without alarm levels 20
6.3 Adapting the system to the plant requirements 20
7 Surveillance programme 21
7.1 General 21
7.2 Reference recordings 21
7.3 Measurements during operation 22
7.3.1 Preliminary surveillance 22
7.3.2 Surveillance 22
7.4 Actions following an alarm 23
7.5 Periodic testing of the system 23
7.5.1 General 23
7.5.2 Functional tests 23

iTeh STANDARD PREVIEW
(standards.iteh.ai)
IEC 60988:2009
https://standards.iteh.ai/catalog/standards/sist/9011207d-c633-40fc-8db7-d05793722356/iec-60988-2009

7.5.3 Electrical system test 24
7.5.4 Test impacts 24
8 Documentation 25
Annex A (informative) Description of loose parts detection with typical sound traces 26
Annex B (informative) Description of detailed functions of each block of the functional block diagram 31
Annex C (informative) Examples of digital loose parts monitoring systems 32
Annex D (informative) Comments on evaluation 34
Bibliography 37

Figure 1 – Functional block diagram of a loose parts monitoring system 12
Figure A.1a – Typical signals of stationary background noise of a PWR 27
Figure A.1b – Typical signals of stationary background noise of a BWR 27
Figure A.1 – Typical signals 27
Figure A.2 – Signals with bursts caused by an operation-related single sound event (control rod drive) 28
Figure A.3 – Signals with bursts caused by an impact of a loose part (pin of upper core support plate) 28
Figure A.4a – Signals with bursts, caused by a test impact at a BWR 29
Figure A.4b – Localisation at a BWR 29
Figure A.4 – BWR 29
Figure A.5a – Signals with burst, caused by a test impact at a PWR 30
Figure A.5b – Localisation at a PWR 30
Figure A.5 – PWR 30
Figure C.1 – Block schematic diagram of a digital loose parts monitoring system 32
Figure C.2 – Block schematic diagram of a digital loose parts monitoring system 33
Figure D.1 – Auto power spectral density and amplitude distribution of a measurement signal with electrical interference 35
Figure D.2 – Burst with corresponding frequency spectrum 35
Figure D.3 – Trend and distribution of channel-selective burst-amplitudes 36
Figure D.4 – Burst signals with determination of delay differences 36

iTeh STANDARD PREVIEW
(standards.iteh.ai)
IEC 60988:2009
https://standards.iteh.ai/catalog/standards/sist/9011207d-c633-40fc-8db7-d05793722336/iec-60988-2009

INTERNATIONAL ELECTROTECHNICAL COMMISSION

NUCLEAR POWER PLANTS – INSTRUMENTATION IMPORTANT TO SAFETY – ACOUSTIC MONITORING SYSTEMS FOR DETECTION OF LOOSE PARTS: CHARACTERISTICS, DESIGN CRITERIA AND OPERATIONAL PROCEDURES

FOREWORD

1) The International Electrotechnical Commission (IEC) is a worldwide organization for standardization comprising all national electrotechnical committees (IEC National Committees). The object of IEC is to promote international co-operation on all questions concerning standardization in the electrical and electronic fields. To this end and in addition to other activities, IEC publishes International Standards, Technical Specifications, Technical Reports, Publicly Available Specifications (PAS) and Guides (hereafter referred to as "IEC Publication(s)"). Their preparation is entrusted to technical committees; any IEC National Committee interested in the subject dealt with may participate in this preparatory work. International, governmental and non-governmental organizations liaising with the IEC also participate in this preparation. IEC collaborates closely with the International Organization for Standardization (ISO) in accordance with conditions determined by agreement between the two organizations.
2) The formal decisions or agreements of IEC on technical matters express, as nearly as possible, an international consensus of opinion on the relevant subjects since each technical committee has representation from all interested IEC National Committees.
3) IEC Publications have the form of recommendations for international use and are accepted by IEC National Committees in that sense. While all reasonable efforts are made to ensure that the technical content of IEC Publications is accurate, IEC cannot be held responsible for the way in which they are used or for any misinterpretation by any end user.
4) In order to promote international uniformity, IEC National Committees undertake to apply IEC Publications transparently to the maximum extent possible in their national and regional publications. Any divergence between any IEC Publication and the corresponding national or regional publication shall be clearly indicated in the latter.
5) IEC provides no marking procedure to indicate its approval and cannot be rendered responsible for any equipment declared to be in conformity with an IEC Publication.
6) All users should ensure that they have the latest edition of this publication.
7) No liability shall attach to IEC or its directors, employees, servants or agents including individual experts and members of its technical committees and IEC National Committees for any personal injury, property damage or other damage of any nature whatsoever, whether direct or indirect, or for costs (including legal fees) and expenses arising out of the publication, use of, or reliance upon, this IEC Publication or any other IEC Publications.
8) Attention is drawn to the Normative references cited in this publication. Use of the referenced publications is indispensable for the correct application of this publication.
9) Attention is drawn to the possibility that some of the elements of this IEC Publication may be the subject of patent rights. IEC shall not be held responsible for identifying any or all such patent rights.

iTeh STANDARD PREVIEW
(standards.iteh.ai)
IEC 60988:2009
https://standards.iteh.ai/catalog/standards/sist/9011207d-c655-40fc-8db7-d05793722356/iec-60988-2009

International Standard IEC 60988 has been prepared by subcommittee 45A: Instrumentation and control of nuclear facilities, of IEC technical committee 45: Nuclear instrumentation.

This second edition cancels and replaces the first edition published in 1990. This edition constitutes a technical revision.

The main technical changes with regard to the previous edition are as follows:

- to bring the contents up to date with technology change in some areas and to reconsider and revise the recommendations;
- to include considerations and recommendations on digitalization for loose parts monitoring systems to cover requirements for such systems;
- to provide an updated introductory subclause describing monitoring technology;
- to discuss and make recommendations on the architecture of a loose part monitoring system;

- to include improved and updated recommendations on storage, information display, alarm level monitor and logic elements;
- to give recommendations on functional and performance measures proven in use for operation of the monitoring system including updated details on the necessary actions after detection of a loose part;
- to include improved recommendations on testing;
- to improve the consistency and clarity and the layout of the contents and to correct any errors found in the previous version;
- to update the comments on evaluation in the informative annexes and to include suitable references;
- to take advantage of experience within SC 45A participating nations.

The text of this standard is based on the following documents:

FDIS	Report on voting
45A/754/FDIS	45A/775/RVD

Full information on the voting for the approval of this standard can be found in the report on voting indicated in the above table.

This publication has been drafted in accordance with the ISO/IEC Directives, Part 2.

iTeh STANDARD PREVIEW
(standards.iteh.ai)

The committee has decided that the contents of this publication will remain unchanged until the maintenance result date indicated on the IEC web site under "http://webstore.iec.ch" in the data related to the specific publication. At this date, the publication will be

IEC 60988:2009
https://standards.iteh.ai/catalog/standards/sist/9011207d-c633-40fc-8db7-d05793722356/iec-60988-2009

- reconfirmed,
- withdrawn,
- replaced by a revised edition, or
- amended.

INTRODUCTION

a) Technical background, main issues and organisation of this Standard

This International Standard addresses the issues specific to acoustic monitoring systems for loose parts detection. It describes the principles, the characteristics and the test methods for those systems.

It is intended that this Standard be used by operators of NPPs (utilities), systems evaluators and by licensors.

b) Situation of the current Standard in the structure of the IEC SC 45A standard series

IEC 60988 is the third level SC 45A document related to acoustic monitoring systems for loose parts detection used in power reactors.

For more details on the structure of the IEC SC 45A standard series, see item d) of this introduction.

c) Recommendations and limitations regarding the application of this Standard

It is important to note that this Standard establishes no additional functional requirements for safety systems.

iTeh STANDARD PREVIEW
(standards.iteh.ai)

d) Description of the structure of the IEC SC 45A standard series and relationships with other IEC documents and other bodies documents (IAEA, ISO)

IEC 60988:2009
https://standards.iteh.ai/catalog/standards/sist/9011207d-c633-40fc-8db7-d05793722356/iec-60988-2009

The top-level document of the IEC SC 45A standard series is IEC 61513. It provides general requirements for I&C systems and equipment that are used to perform functions important to safety in NPPs. IEC 61513 structures the IEC SC 45A standard series.

IEC 61513 refers directly to other IEC SC 45A standards for general topics related to categorization of functions and classification of systems, qualification, separation of systems, defence against common cause failure, software aspects of computer-based systems, hardware aspects of computer-based systems, and control room design. The standards referenced directly at this second level should be considered together with IEC 61513 as a consistent document set.

At a third level, IEC SC 45A standards not directly referenced by IEC 61513 are standards related to specific equipment, technical methods, or specific activities. Usually these documents, which make reference to second-level documents for general topics, can be used on their own.

A fourth level extending the IEC SC 45A standard series, corresponds to the Technical Reports which are not normative.

IEC 61513 has adopted a presentation format similar to the basic safety publication IEC 61508 with an overall safety life-cycle framework and a system life-cycle framework and provides an interpretation of the general requirements of IEC 61508-1, IEC 61508-2 and IEC 61508-4, for the nuclear application sector. Compliance with IEC 61513 will facilitate consistency with the requirements of IEC 61508 as they have been interpreted for the nuclear industry. In this framework IEC 60880 and IEC 62138 correspond to IEC 61508-3 for the nuclear application sector.

IEC 61513 refers to ISO as well as to IAEA 50-C-QA (now replaced by IAEA GS-R-3) for topics related to quality assurance (QA).

The IEC SC 45A standards series consistently implements and details the principles and basic safety aspects provided in the IAEA code on the safety of NPPs and in the IAEA safety series, in particular the Requirements NS-R-1, establishing safety requirements related to the design of Nuclear Power Plants, and the Safety Guide NS-G-1.3 dealing with instrumentation and control systems important to safety in Nuclear Power Plants. The terminology and definitions used by SC 45A standards are consistent with those used by the IAEA.

iTeh STANDARD PREVIEW
(standards.iteh.ai)
IEC 60988:2009
https://standards.iteh.ai/catalog/standards/sist/9011207d-c633-40fc-8db7-d05793722356/iec-60988-2009

NUCLEAR POWER PLANTS – INSTRUMENTATION IMPORTANT TO SAFETY – ACOUSTIC MONITORING SYSTEMS FOR DETECTION OF LOOSE PARTS: CHARACTERISTICS, DESIGN CRITERIA AND OPERATIONAL PROCEDURES

1 Scope

This International Standard is applicable to on-site systems used for continuous monitoring of structure-borne sound measured at the reactor coolant pressure boundary of light water reactors for the purpose of detecting loose parts.

2 Normative references

The following referenced documents are indispensable for the application of this document. For dated references, only the edition cited applies. For undated references, the latest edition of the referenced document (including any amendments) applies.

IEC 61226, *Nuclear power plants – Instrumentation and control systems important to safety – Classification of instrumentation and control functions*

IEC 61513, *Nuclear power plants – Instrumentation and control for systems important to safety – General requirements for systems*

iTeh STANDARD PREVIEW
(standards.iteh.ai)
IEC 60988:2009
https://standards.iteh.ai/catalog/standards/sist/9011207d-c633-40fc-8db7-d05793722356/iec-60988-2009

3 Terms and definitions

For the purposes of this document, the following terms and definitions apply.

3.1
adaptive resonant frequency
natural frequency of the mechanical attachment (e.g. bolts, magnets), including sound sensors

3.2
alarm level monitor
a device which compares the value of a variable with a fixed or variable threshold. If the threshold is exceeded, the output signal changes its state

3.3
background noise
structure-borne sound which is generated during operation of the reactor plant, even in the absence of loose parts. It is composed of stationary background noise and operation-related single sound events

3.4
burst amplitude distribution
frequency distribution of the maximum observed amplitudes of the bursts in the signal of a sound sensor

3.5
burst interval distribution
frequency distribution of the time intervals observed between the individual bursts in the signal of a sound sensor

3.6
delay difference
time difference between the occurrences of the bursts generated by a single sound event in the signals of different sound sensors

3.7
detached part
part which has become detached from the component in the pressure-retaining boundary of the reactor coolant, and which therefore can be carried along with the reactor coolant

3.8
known event
an event for which comparable events occurred repeatedly, were recorded, evaluated and assessed and the criteria for the comparability of these events have been identified and defined (e. g. signal form, delay)

NOTE A known event can be a single burst or a set of bursts. A known event can be classified as an event being alarm-relevant or not being alarm-relevant.

3.9
loose part
both a detached or loosened part as well as a foreign part

iTeh STANDARD PREVIEW
(standards.iteh.ai)
IEC 60988:2009
https://standards.iteh.ai/catalog/standards/sist/9011207d-e053-40f0-8d57-d05793722356/iec-60988-2009

3.10
loosened part
part which becomes loose, yet still remains connected to the component to which it was originally firmly attached

3.11
monitored signal
signal from a band-pass filter applied to the sound sensor signal

3.12
resonance factor
ratio of the signal amplitude at the natural frequency of response to the amplitude in the flat region of response of the sensor system with any attachments

3.13
single channel alarm inhibit
a function that inhibits an alarm if only one channel has been triggered by a single sound event. An alarm is set if at least a second channel has been triggered by the same single sound event

3.14
single sound event
structure-borne sound generated by a single event which is superimposed on the stationary background noise (e.g. impact of a loose part, control rod drive noise or a sudden reduction of stresses)

3.15
sound burst
signal component generated in the sound sensor as a result of a single event causing a sound which is superimposed on the signal of the stationary background noise

NOTE In this standard the term burst is used as an equivalent.

3.16
sound sensor
mechanical/electrical energy converters receiving structure-borne sound which is detectable at the surface of a solid body as displacement, velocity or acceleration

3.17
stationary background noise
consists of stochastic components (e.g. coolant flow noise, fluid resonances) and deterministic components (e.g. speed-dependent pump noise)

3.18
structure-borne sound
sound which propagates in solid bodies. The structure-borne sound in this standard is taken to mean the sound within the audible frequency range

4 Purpose and description of loose parts detection

4.1 General

The presence of a loose part in the primary coolant system can be indicative of degraded reactor safety resulting from a failed or weakened component or from a part inadvertently left in the primary system during construction, refuelling, or maintenance. A loose part can contribute to component damage and material wear by frequent impacting with other parts in the system. A loose part can pose a serious threat of partial flow blockage with attendant departure from nucleate boiling which in turn could result in failure of fuel cladding.

iTeh STANDARD PREVIEW
(standards.iteh.ai)

Early detection of a loose part can provide the time required to avoid or mitigate safety-related damage to, or malfunction of, primary system components. The primary purpose of a loose parts detection system is the early detection of loose, loosened or detached metallic parts with their potential to cause damage to:

IEC 60988:2009
https://standards.iteh.ai/catalog/standards/sist/9011207d-c633-40fc-8db7-d05793722356/iec-60988-2009

a) the reactor core,

b) other internals structures of the primary circuit, or

c) the primary circuit pressure boundary.

Suitable systems shall be installed for this purpose.

Loose parts detection systems have been used successfully in water reactors for many years, and have detected bolts and tools dropped in construction or refuelling, which otherwise could have caused significant damage. They normally have a low safety significance, but due to the potential for damage that a loose part could cause, regulators will expect installation of suitable systems.

4.2 System definition

Depending on the national safety regulation,

– The system focuses mainly on the loose parts detection on the primary coolant system. The system may additionally monitor the vibrational state of the primary circuit. This option (which is outside the scope of this standard) may have consequences on the number and the location of the sensors.

– The expertise to make a diagnosis may be present either:

  locally in each plant site. This implies that the analysis tools are available on-site and the on-site operators have to be trained for a signal evaluation; or

  on a remote site at a national level. This implies that the transfer of all of the necessary data to the experts is always fully efficient.

– The triggering of an alarm sent to the control room may be based on signals exceeding a threshold by either:

  the burst amplitude of a single sound event. This makes it possible to record and analyse the signals event by event, or

  the rate at which transients are detected. This implies continuously recording the signals. The diagnosis is then made from an analysis including many single sound events.

– The monitoring of the state of the sensors may be done by

  a calibration test equipment for the measurement lines with impact hammer units on the primary circuit, or by

  in-depth monitoring and signal processing of the background noise.

When designing a new system a choice from the above-mentioned items should be made as a first step. According to the national regulation the system definition needs to be specified.

4.3 System outline

Loose parts detection systems typically consist of a set of accelerometers mounted on the reactor vessel, steam generators and coolant pump casings, with processing electronics to filter the sound signals from the sensors and monitor them for alarms. Recording facilities are provided, and operators generally listen to the sensor noise at regular intervals, and specifically after refuelling, due to the sensitivity and processing power of the human ear. A fuller description with typical sound traces is provided in Annex A.

iTeh STANDARD PREVIEW
(standards.iteh.ai)

5 System requirements

5.1 Basic structure and design criteria

IEC 60988:2009
https://standards.iteh.ai/catalog/standards/sist/9011207d-e633-40fc-8db7-d05793722356/iec-60988-2009

Generally the system has the following basic functions (see Figure 1).

- signal acquisition,
- signal processing,
- signal storage and signal display,
- signal monitoring,
- calibration.

Requirements for each basic function are described in the following subclauses.

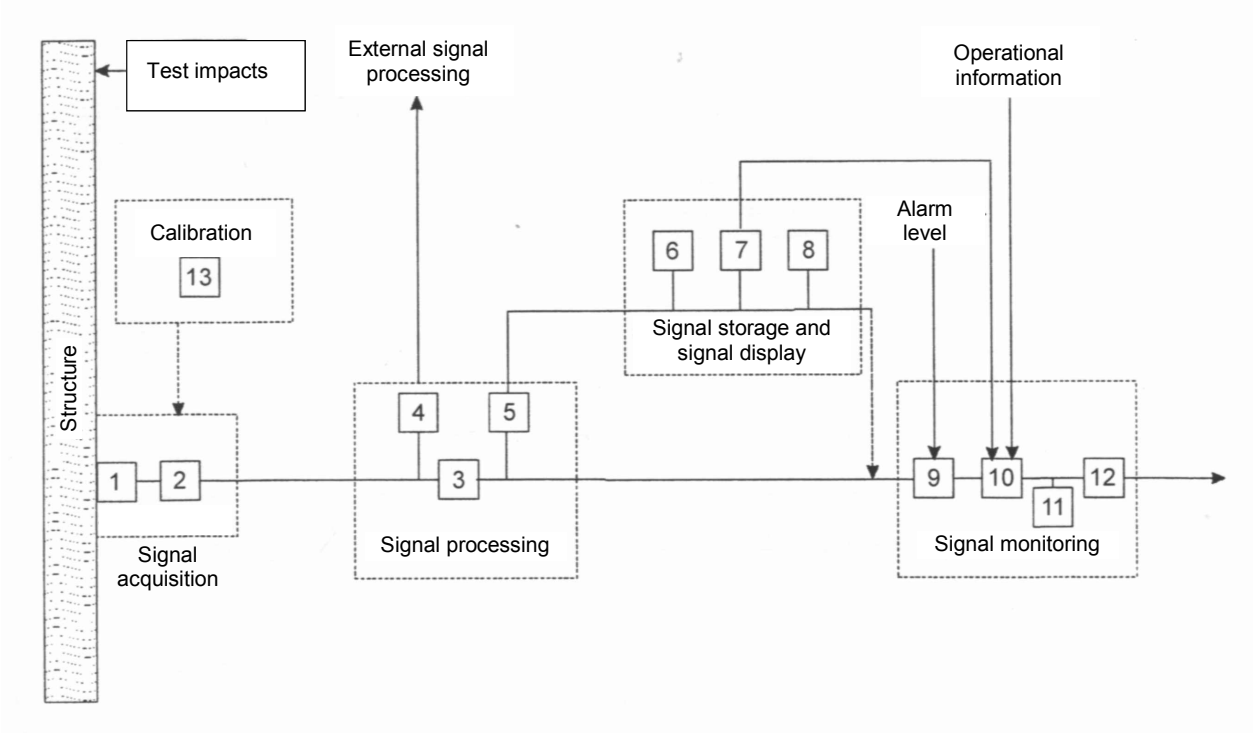

iTeh STANDARD PREVIEW
(standards.iteh.ai)

Key

1	Sound sensor	8	Audio unit
2	Preamplifier	9	Alarm level monitor
3	Band-pass filter	10	Logic element
4	Decoupled signal outputs	11	Internal alarm unit
5	Amplifier	12	Interface to external alarm unit
6	Indicator (display)	13	Calibration unit
7	Recording or storage		

IEC 60988:2009
https://standards.iteh.ai/catalog/standards/sist/9011207d-c633-40fc-8db7-d05793722356/iec-60988-2009

NOTE 1 Control signals are not shown.

NOTE 2 On-line calibration equipment and test impact units need not be permanently installed.

NOTE 3 The monitoring system is an operational system whose function is not classified at a high category according to IEC 61513 and IEC 61226.

Figure 1 – Functional block diagram of a loose parts monitoring system

The detailed functions of each block are described in informative Annex B and specific requirements are given in the following subclauses.

The design and installation of the system (including its detection sensitivity) shall be in accordance with national regulations relating to system instrumentation and control for the particular reactor plant.

The system shall be designed using a frequency range consistent with detection algorithms that will ensure sufficient sensitivity of the system to detect a metallic loose part with a minimum of false alarms. Depending upon the particular detection algorithm the frequency range is typically between f_a = 0,5 Hz to 1 kHz and f_b = 10 kHz to 20 kHz, where f_a and f_b refer to the lower and upper 3 dB frequencies of the bandwidth of the pass band.

NOTE Processing up to f_b = 20 kHz is very suitable.

The differences in the transfer functions of one measuring chain from any other measuring chain, excluding the sound sensors, should not be greater than 1 dB when selecting identical cut-off frequencies of the band-pass filters.

5.2 Signal acquisition

5.2.1 Selection and installation of the sound sensors

The recommended sound sensors are piezoelectric transducers. Sound sensors shall be selected to be able to withstand the ambient conditions (e.g. simultaneous exposure to high temperature and radiation levels, splash water) prevailing at their point of installation.

The sound sensors shall be mounted on the outer surface of the pressure-retaining boundary.

All methods of attachment (e.g. screw, magnetic, clamping connections) which meet the requirements described in this standard may be used. All sound sensors should have uniform response characteristics.

The mounting locations shall be selected on the basis of the following:

- the sound sensors shall be positioned in the areas to be monitored. Monitoring areas are, e.g., the reactor pressure vessel bottom head and steam generator inlet water box,
- the sound sensors should be mounted in accessible areas where conditions for sound transmission between the internal structures and the pressure-retaining boundary are particularly favourable (e.g. in the nozzle area of the pressurised water reactor, in the area of the core supports and in the area of the dryer support ring in boiling water reactors),
- the sound sensors should be replaceable,
- the arrangement of the sound sensors shall not restrict accessibility for non-destructive examinations, and the sensor location should be selected so as to minimise dose rates to the equipment and personnel conducting maintenance on the equipment.

iTeh STANDARD PREVIEW
(standards.iteh.ai)
IEC 60988:2009
https://standards.iteh.ai/catalog/standards/sist/9011e2f9-1f-c053-40fc-8d07e-d05795722538/iec-60988-2009

The number of sound sensors for each monitoring area is directly related to the function. If detection is required of a detached or loosened part only, then a single sound sensor is sufficient. To distinguish between detached and loosened parts, two sound sensors may be adequate in many cases. When it is necessary to locate detached and loosened parts two dimensionally, at least three sound sensors are required (e.g. reactor pressure vessel surveillance).

In case of defective and inaccessible sound sensors, new sound sensors may be installed in accessible areas as a replacement, taking account of the information content of the signals in comparison to the dose exposure of the personnel conducting maintenance.

NOTE It may be preferable to place at least two sensors in each monitoring area which avoids information loss in case of a defective sensor. Further sound sensors may be necessary for the diagnosis of single sound events. The associated signals may be monitored separately.

For installing the sound sensors, the mounting locations shall be prepared in accordance with the nature of the intended connection. The mounting surface for the sound sensors should be matched to the intended type of mounting. In addition, screw and clamping connections shall be protected against loosening, and magnets against slipping. Provision shall be made for the strain relief of the sensor cables.

The installation sites for sensors should be agreed with the design and site installation engineers concerned with the vessels that are monitored and those concerned with their thermal insulation. Removable sections of insulation should be used to allow access to the sensors.