IEC 60512-16-7

Edition 1.0 2008-07

INTERNATIONAL STANDARD

NORME INTERNATIONALE

Connectors for electronic equipment – Tests and measurements – Part 16-7: Mechanical tests on contacts and terminations – Test 16g: Measurement of contact deformation after crimping

iTeh STANDARD PREVIEW
(standards.iteh.ai)
IEC 60512-16-7:2008
https://standards.iteh.ai/catalog/standards/sist/d8be18bd-adcd-4bfa-8a1e-
f1e0e514a6e57/iec-60512-16-7-2008

Connecteurs pour équipements électroniques – Essais et mesures – Partie 16-7: Essais mécaniques des contacts et des sorties – Essai 16g: Mesure de la déformation d'un contact après sertissage



IEC 60512-16-7:2008

THIS PUBLICATION IS COPYRIGHT PROTECTED

Copyright © 2008 IEC, Geneva, Switzerland

All rights reserved. Unless otherwise specified, no part of this publication may be reproduced or utilized in any form or by any means, electronic or mechanical, including photocopying and microfilm, without permission in writing from either IEC or IEC's member National Committee in the country of the requester.
If you have any questions about IEC copyright or have an enquiry about obtaining additional rights to this publication, please contact the address below or your local IEC member National Committee for further information.

Droits de reproduction réservés. Sauf indication contraire, aucune partie de cette publication ne peut être reproduite ni utilisée sous quelque forme que ce soit et par aucun procédé, électronique ou mécanique, y compris la photocopie et les microfilms, sans l'accord écrit de la CEI ou du Comité national de la CEI du pays du demandeur.
Si vous avez des questions sur le copyright de la CEI ou si vous désirez obtenir des droits supplémentaires sur cette publication, utilisez les coordonnées ci-après ou contactez le Comité national de la CEI de votre pays de résidence.

IEC Central Office
3, rue de Varembé
CH-1211 Geneva 20
Switzerland
Email: inmail@iec.ch
Web: www.iec.ch

About the IEC

The International Electrotechnical Commission (IEC) is the leading global organization that prepares and publishes International Standards for all electrical, electronic and related technologies.

About IEC publications

The technical content of IEC publications is kept under constant review by the IEC. Please make sure that you have the latest edition, a corrigenda or an amendment might have been published.

iTeh STANDARD PREVIEW
(standards.iteh.ai)

- Catalogue of IEC publications: www.iec.ch/searchpub

The IEC on-line Catalogue enables you to search by a variety of criteria (reference number, text, technical committee,…). It also gives information on projects, withdrawn and replaced publications.

- IEC Just Published: www.iec.ch/online_news/justpub

Stay up to date on all new IEC publications. Just Published details twice a month all new publications released. Available on-line and also by email.

IEC 60512-16-7:2008
https://standards.iteh.ai/catalog/standards/sist/d8be18bd-adcd-4bfa-8a1c-5f8b1aa0a0/iec-60512-16-7-2008

- Electropedia: www.electropedia.org

The world's leading online dictionary of electronic and electrical terms containing more than 20 000 terms and definitions in English and French, with equivalent terms in additional languages. Also known as the International Electrotechnical Vocabulary online.

- Customer Service Centre: www.iec.ch/webstore/custserv

If you wish to give us your feedback on this publication or need further assistance, please visit the Customer Service Centre FAQ or contact us:
Email: csc@iec.ch
Tel.: +41 22 919 02 11
Fax: +41 22 919 03 00

A propos de la CEI

La Commission Electrotechnique Internationale (CEI) est la première organisation mondiale qui élabore et publie des normes internationales pour tout ce qui a trait à l'électricité, à l'électronique et aux technologies apparentées.

A propos des publications CEI

Le contenu technique des publications de la CEI est constamment revu. Veuillez vous assurer que vous possédez l'édition la plus récente, un corrigendum ou amendement peut avoir été publié.

- Catalogue des publications de la CEI: www.iec.ch/searchpub/cur_fut-f.htm

Le Catalogue en-ligne de la CEI vous permet d'effectuer des recherches en utilisant différents critères (numéro de référence, texte, comité d'études,…). Il donne aussi des informations sur les projets et les publications retirées ou remplacées.

- Just Published CEI: www.iec.ch/online_news/justpub

Restez informé sur les nouvelles publications de la CEI. Just Published détaille deux fois par mois les nouvelles publications parues. Disponible en-ligne et aussi par email.

- Electropedia: www.electropedia.org

Le premier dictionnaire en ligne au monde de termes électroniques et électriques. Il contient plus de 20 000 termes et définitions en anglais et en français, ainsi que les termes équivalents dans les langues additionnelles. Egalement appelé Vocabulaire Electrotechnique International en ligne.

- Service Clients: www.iec.ch/webstore/custserv/custserv_entry-f.htm

Si vous désirez nous donner des commentaires sur cette publication ou si vous avez des questions, visitez le FAQ du Service clients ou contactez-nous:
Email: csc@iec.ch
Tél.: +41 22 919 02 11
Fax: +41 22 919 03 00

IEC 60512-16-7

Edition 1.0 2008-07

INTERNATIONAL STANDARD

NORME INTERNATIONALE

Connectors for electronic equipment – Tests and measurements – Part 16-7: Mechanical tests on contacts and terminations – Test 16g: Measurement of contact deformation after crimping

iTeh STANDARD PREVIEW
(standards.iteh.ai)
IEC 60512-16-7:2008
https://standards.iteh.ai/catalog/standards/sist/d8bc1e8d-4dcd-4bfa-8a1e-31d6514d7967/iec-60512-16-7-2008

Connecteurs pour équipements électroniques – Essais et mesures – Partie 16-7: Essais mécaniques des contacts et des sorties – Essai 16g: Mesure de la déformation d'un contact après sertissage

INTERNATIONAL
ELECTROTECHNICAL
COMMISSION

COMMISSION
ELECTROTECHNIQUE
INTERNATIONALE

PRICE CODE
CODE PRIX G

ICS 31.220.10

ISBN 2-8318-9882-X

® Registered trademark of the International Electrotechnical Commission
Marque déposée de la Commission Electrotechnique Internationale

INTERNATIONAL ELECTROTECHNICAL COMMISSION

CONNECTORS FOR ELECTRONIC EQUIPMENT – TESTS AND MEASUREMENTS –

Part 16-7: Mechanical tests on contacts and terminations – Test 16g: Measurement of contact deformation after crimping

FOREWORD

1) The International Electrotechnical Commission (IEC) is a worldwide organization for standardization comprising all national electrotechnical committees (IEC National Committees). The object of IEC is to promote international co-operation on all questions concerning standardization in the electrical and electronic fields. To this end and in addition to other activities, IEC publishes International Standards, Technical Specifications, Technical Reports, Publicly Available Specifications (PAS) and Guides (hereafter referred to as "IEC Publication(s)"). Their preparation is entrusted to technical committees; any IEC National Committee interested in the subject dealt with may participate in this preparatory work. International, governmental and non-governmental organizations liaising with the IEC also participate in this preparation. IEC collaborates closely with the International Organization for Standardization (ISO) in accordance with conditions determined by agreement between the two organizations.
2) The formal decisions or agreements of IEC on technical matters express, as nearly as possible, an international consensus of opinion on the relevant subjects since each technical committee has representation from all interested IEC National Committees.
3) IEC Publications have the form of recommendations for international use and are accepted by IEC National Committees in that sense. While all reasonable efforts are made to ensure that the technical content of IEC Publications is accurate, IEC cannot be held responsible for the way in which they are used or for any misinterpretation by any end user.
4) In order to promote international uniformity, IEC National Committees undertake to apply IEC Publications transparently to the maximum extent possible in their national and regional publications. Any divergence between any IEC Publication and the corresponding national or regional publication shall be clearly indicated in the latter.
5) IEC provides no marking procedure to indicate its approval and cannot be rendered responsible for any equipment declared to be in conformity with an IEC Publication.
6) All users should ensure that they have the latest edition of this publication.
7) No liability shall attach to IEC or its directors, employees, servants or agents including individual experts and members of its technical committees and IEC National Committees for any personal injury, property damage or other damage of any nature whatsoever, whether direct or indirect, or for costs (including legal fees) and expenses arising out of the publication, use of, or reliance upon, this IEC Publication or any other IEC Publications.
8) Attention is drawn to the Normative references cited in this publication. Use of the referenced publications is indispensable for the correct application of this publication.
9) Attention is drawn to the possibility that some of the elements of this IEC Publication may be the subject of patent rights. IEC shall not be held responsible for identifying any or all such patent rights.

iTeh STANDARD PREVIEW
(standards.iteh.ai)
IEC 60512-16-7:2008
https://standards.iteh.ai/catalog/standards/sist/d8bc488d-aded-4b1a-8afe-31d6514d7967/iec-60512-16-7-2008

International Standard IEC 60512-16-7 has been prepared by subcommittee 48B: Connectors, of IEC technical committee 48: Electromechanical components and mechanical structures for electronic equipment.

This standard cancels and replaces test 16g of IEC 60512-8, issued in 1993. This standard is to be read in conjunction with IEC 60512-1 and IEC 60512-1-100 which explains the structure of the IEC 60512 series.

The text of this standard is based on the following documents:

FDIS	Report on voting
48B/1888/FDIS	48B/1921/RVD

Full information on the voting for the approval of this standard can be found in the report on voting indicated in the above table.

This publication has been drafted in accordance with the ISO/IEC Directives, Part 2.

A list of all parts of the IEC 60512 series, under the general title *Connectors for electronic equipment – Tests and measurements*, can be found on the IEC website.

The committee has decided that the contents of this publication will remain unchanged until the maintenance result date indicated on the IEC web site under "http://webstore.iec.ch" in the data related to the specific publication. At this date, the publication will be

- reconfirmed,
- withdrawn,
- replaced by a revised edition, or
- amended.

iTeh STANDARD PREVIEW
(standards.iteh.ai)
IEC 60512-16-7:2008
https://standards.iteh.ai/catalog/standards/sist/d8be18bd-adcd-4bfa-8a1c-31d6514d7967/iec-60512-16-7-2008

CONNECTORS FOR ELECTRONIC EQUIPMENT – TESTS AND MEASUREMENTS –

Part 16-7: Mechanical tests on contacts and terminations – Test 16g: Measurement of contact deformation after crimping

1 Scope and object

This part of IEC 60512, when required by the detail specification, is used for testing connectors within the scope of IEC technical committee 48. It may also be used for similar devices when specified in a detail specification.

The object of this part of IEC 60512 is to detail a standard test method to assess the effectiveness of contacts to resist deformation (damage) from crimping operations.

Although this test is intended for cylindrical contacts, especially machined contacts, it is applicable to contacts with other geometries and construction. In which case, the detail specification shall contain sufficient detail, given under clause 4, to enable the test to be done.

iTeh STANDARD PREVIEW
(standards.iteh.ai)

2 Normative references

The following referenced documents are indispensable for the application of this document. For dated references, only the edition cited applies. For undated references, the latest edition of the referenced document (including any amendments) applies.

IEC 60512-16-7:2008
https://standards.iteh.ai/catalog/standards/sist/[illegible]-4bfa-8a1c-31d6514d7967/iec-60512-16-7-2008

IEC 60512-1-1, *Connectors for electronic equipment – Tests and measurements – Part 1-1: General examination – Test 1a: Visual examination*

3 Preparations

3.1 Preparation of specimen

The specimen shall consist of contact-wire assemblies. The length of cable protruding from the contact shall be at least 100 mm. Number of specimens: 10 specimens for each barrel size (5 for the minimum wire size and 5 for the maximum wire size) unless otherwise specified in the detail specification.

The crimping tool(s) shall be those specified in the detail specification. If none are so specified, the contact manufacturer's instructions for tooling shall be followed.

In any case, full details of tooling shall be given in any reports supporting claims of conformance to this part of IEC 60512.

Any preconditioning given in the detail specification shall be applied.

3.2 Equipment

A mounting collet shall be provided such that the contact may be rotated around its longitudinal axis to permit measurements at the specified points. The precision of the collet shall be such that the run-out of a steel gauge pin of 1,5 to 2,0 mm diameter measured 10 to 15 mm from the collet face shall not exceed 0,1 % of such distance.

4 Test procedure

The contact shall be held in a collet in region H as shown in Figure 1, so that the contact can be rotated around the longitudinal axis to permit measurements at the specified points. A suitable test arrangement is shown in Figure 2.

In the case of cylindrical contacts, readings (preferably with an indicator gauge) of the position of the contact shall be taken before and after crimping. The total excursion of the position when the contact is rotated is halved to give the deformation (or damage).

Non-circular contacts shall be measured in a similar manner. The deformation (or damage) may be similarly calculated.

iTeh STANDARD PREVIEW
(standards.iteh.ai)
IEC 60512-16-7:2008
https://standards.iteh.ai/catalog/standards/sist/d8be18bd-adcd-4bfa-8a1c-31d6514d7967/iec-60512-16-7-2008

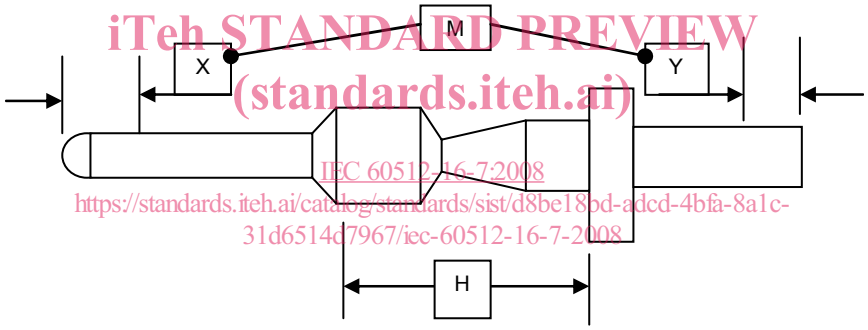

Key

X Twice the male contact diameter. Also used for corresponding female contact

OR

If not circular, corresponding characteristic dimension of each contact.

Y Mid point between end of crimp barrel, or end of contact, and beginning of crimp indentation

M Measurement points for contact deformation

H (Example of) Holding area

NOTE This should correspond to the area in which the contact is intended to be held in use.

Figure 1 – Example of holding and measurement points

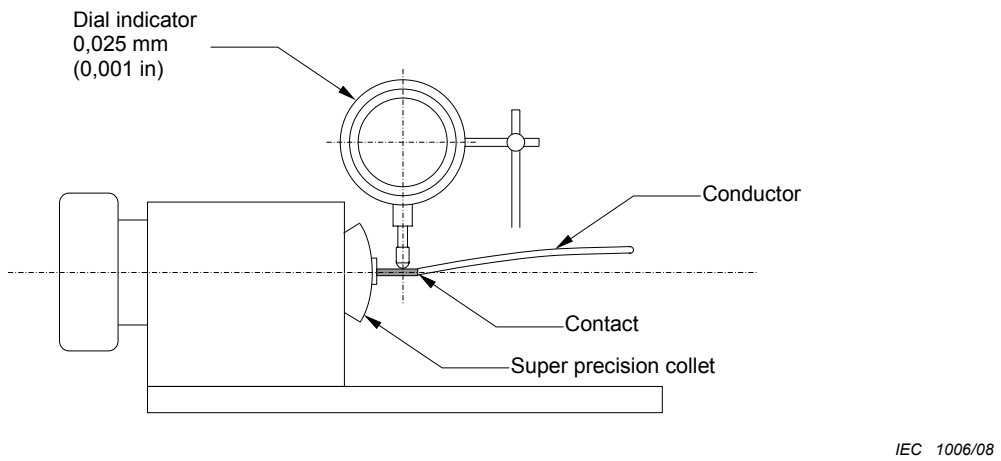

Figure 2 – Typical test arrangement for deformation measurement

5 Measurements and requirements

5.1 Before testing

Visual examination according to IEC 60512-1-1 shall be carried out. There shall be no defects that would impair the validity of the test.

iTeh STANDARD PREVIEW
(standards.iteh.ai)
IEC 60512-16-7:2008
https://standards.iteh.ai/catalog/standards/sist/d8ba18bd-adcd-4bfa-8a1c-21d6514d7967/iec-60512-16-7-2008

5.2 After testing

The requirements of the detail specification for deformation shall be met. Visual examination according to IEC 60512-1-1 shall be carried out. There shall be no defects, other than any found under 5.1, that would impair the normal functioning of the component.

6 Details to be specified

When this test is required by the detail specification, the following details shall be specified.

a) wire type and size;

b) specification of crimping tool(s) to be used;

c) area(s) of contact to be held by the mounting collet;

NOTE This should correspond to the housing or insert location point(s).

d) points of measurement on the contact; if other than those given in 3.2;

e) values of deformation permitted, for each point of measurement;

f) number of specimens to be tested if different than specified in 3.1;

g) any deviation from the standard test method.

Bibliography

IEC 60352-2, *Solderless connections – Part 2: Crimped connections – General requirements, test methods and practical guidance*

iTeh STANDARD PREVIEW
(standards.iteh.ai)
IEC 60512-16-7:2008
https://standards.iteh.ai/catalog/standards/sist/d8be18bd-adcd-4bfa-8a1c-31d6514d7967/iec-60512-16-7-2008