INTERNATIONAL STANDARD

ISO 7983

First edition
1988-11-15

INTERNATIONAL ORGANIZATION FOR STANDARDIZATION
ORGANISATION INTERNATIONALE DE NORMALISATION
МЕЖДУНАРОДНАЯ ОРГАНИЗАЦИЯ ПО СТАНДАРТИЗАЦИИ

Woodworking machines — Single blade circular sawing machines with travelling table — Nomenclature and acceptance conditions

Machines à bois — Machines à scier circulaires, monolame, à table mobile pour coupe au format — Nomenclature et conditions de réception

Reference number
ISO 7983 : 1988 (E)

Foreword

ISO (the International Organization for Standardization) is a worldwide federation of national standards bodies (ISO member bodies). The work of preparing International Standards is normally carried out through ISO technical committees. Each member body interested in a subject for which a technical committee has been established has the right to be represented on that committee. International organizations, governmental and non-governmental, in liaison with ISO, also take part in the work. ISO collaborates closely with the International Electrotechnical Commission (IEC) on all matters of electrotechnical standardization.

Draft International Standards adopted by the technical committees are circulated to the member bodies for approval before their acceptance as International Standards by the ISO Council. They are approved in accordance with ISO procedures requiring at least 75 % approval by the member bodies voting.

International Standard ISO 7983 was prepared by Technical Committee ISO/TC 39, *Machine tools.*

Annex A of this International Standard is for information only.

Printed in Switzerland

Woodworking machines — Single blade circular sawing machines with travelling table — Nomenclature and acceptance conditions

1 Scope

This International Standard specifies the nomenclature appropriate to each part of the machine and, with reference to ISO 230-1, the geometrical tests for single blade circular sawing machines with travelling table, and gives the corresponding permissible deviations which apply to machines of general purpose use and normal accuracy.

NOTE — In addition to terms used in the three official ISO languages (English, French and Russian), this International Standard gives the equivalent terms in the German, Italian and Swedish languages; these are published under the responsibility of the member bodies for Germany, F.R. (DIN), Italy (UNI) and Sweden (SIS). However, only the terms given in the official languages can be considered as ISO terms.

This International Standard deals only with the verification of the accuracy of the machine. It does not apply to the testing of the running of the machine (vibrations, abnormal noises, stick-slip motion of the components, etc.), nor to its characteristics (speeds, feeds, etc.) which should generally be checked before the accuracy is tested.

This International Standard applies to those machines designated by the number 12.131.372 in ISO 7984[1].

This International Standard does not impose any practical test. For single blade circular sawing machines with travelling table, practical tests should be exceptions and shall be stated in a previous agreement between the producer and the user.

2 Normative reference

The following standard contains provisions which, through reference in this text, constitute provisions of this International Standard. At the time of publication, the edition indicated was valid. All standards are subject to revision, and parties to agreements based on this International Standard are encouraged to investigate the possibility of applying the most recent edition of the standard listed below. Members of IEC and ISO maintain registers of currently valid International Standards.

ISO 230-1 : 1986, *Acceptance code for machine tools — Part 1: Geometric accuracy of machines operating under no-load or finishing conditions.*

3 Preliminary remarks

3.1 In this International Standard all dimensions and permissible deviations are expressed in millimetres.

3.2 To apply this International Standard, reference should be made to ISO 230-1, especially for installation of the machine before testing, the warming up of the main spindle and other moving parts, and the description of the measuring methods. The measuring instruments shall not permit measurement errors over 1/3 of the checked tolerances.

3.3 The sequence in which the geometrical tests are given is related to the sub-assemblies of the machine, and this in no way defines the practical order of testing. In order to make mounting of instruments and gauging easier, tests may be applied in any order.

3.4 When inspecting a machine, it is not always possible or necessary to carry out all the tests given in this International Standard.

3.5 It is up to the user to choose, in agreement with the manufacturer, those tests relating to the properties which are of interest to him, but these tests shall be clearly stated when ordering a machine.

3.6 A movement is longitudinal when it takes place in the working direction of the piece.

3.7 When establishing the tolerance for a measuring range different from that given in this International Standard (see subclause 2.311 in ISO 230-1), it should be taken into consideration that the minimum value of the tolerance is 0,01 mm.

1) ISO 7984 : 1988, *Woodworking machines — Technical classification of woodworking machines and auxiliary machines for woodworking.*

4 Nomenclature

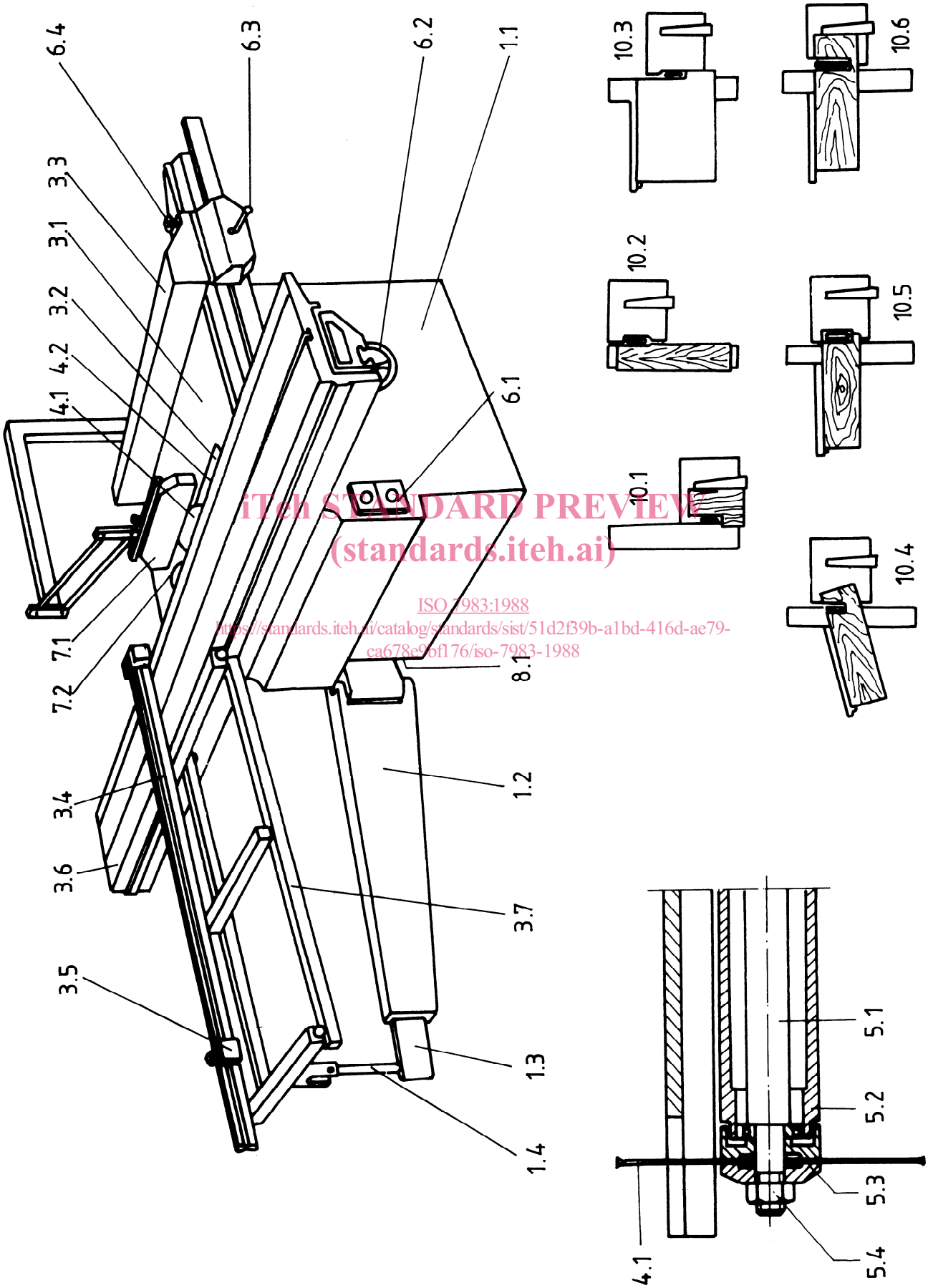

Reference	English	French	Russian
	Single blade circular sawing machine with travelling table	**Machine à scier circulaire, monolame, à table mobile pour coupe au format**	**Станок круглопильный с подвижным столом**
1	**Framework**	**Ossature**	**Каркас**
1.1	Main frame	Bâti	Станина
1.2	Swinging arm	Bras télescopique	Телескопическая стрела
1.3	Extension to swinging arm	Allonge du bras télescopique	Удлинение к телескопической стреле
1.4	Support	Porte-bras	Опора
2	**Feed of workpiece and/or tools**	**Déplacement des pièces et/ou outils**	**Подача деталей и/или инструмента**
3	**Workpiece support, clamp and guide**	**Support, maintien et guidage des pièces**	**Опора, крепление и направление деталей**
3.1	Table	Table	Стол
3.2	Table insert	Plaque amovible	Съемная пластина
3.3	Parallel fence	Guide longitudinal	Продольная направляющая
3.4	Travelling table fence	Guide de table mobile	Направляющая подвижного стола
3.5	Adjustable fence	Butée réglable	Регулируемый упор
3.6	Travelling table	Table mobile	Подвижный стол
3.7	Transverse table	Chariot transversal	Поперечный стол
4	**Tool-holders and tools**	**Porte-outils et outils**	**Державки инструмента и инструмент**
4.1	Sawblade	Lame	Пила
4.2	Scoring sawblade (optional)	Inciseur (option)	Зачиститель (не обязательно)
5	**Workhead and tool drives**	**Unité de travail et son entraînement**	**Рабочая головка и ее приводы**
5.1	Circular saw spindle	Arbre	Шпиндель
5.2	Saw spindle mounting	Support de l'arbre	Оправка шпинделя
5.3	Flange	Flasque de blocage de la lame	Опорная шайба
5.4	Clamping nut	Écrou	Зажимная гайка
6	**Controls**	**Commandes**	**Управление**
6.1	Switch	Commutateur	Переключатель
6.2	Adjustment for cutting height	Commande de réglage de la lame en hauteur	Регулировка пилы по вертикали
6.3	Clamping lock for parallel fence	Blocage du guide longitudinal	Блокировка горизонтальной направляющей
6.4	Fine adjustment for parallel fence	Commande de réglage fin du guide longitudinal	Тонкая регулировка горизонтальной направляющей
7	**Safety devices** (examples)	**Dispositifs de sécurité** (exemples)	**Предохранительные устройства** (примеры)
7.1	Top guard	Protecteur de la lame	Защитный кожух пилы
7.2	Riving knife	Couteau diviseur	Делительный нож
8	**Miscellaneous**	**Divers**	**Прочее**
8.1	Extraction connections	Buse d'aspiration	Отсасывающий патрубок
9	(clause free)	(chapitre libre)	(свободно)
10	**Examples of work**	**Exemples de travail**	**Примеры работ**
10.1	Cutting to width	Coupe en largeur	Поперечная распиловка
10.2	Square-edging	Délignage	Обрезка кромок
10.3	Panel sizing	Coupe au format	Раскрой плит
10.4	Mitre-cutting	Coupe d'onglet	Распиловка под углом
10.5	Angle cutting and cross-cutting	Coupe d'équerre et en travers	Распиловка уголком и наискось
10.6	Panel dividing using the parallel fence	Coupe au guide longitudinal	Распиловка по продольной направляющей

5 Acceptance conditions and permissible deviations — Geometrical tests

No.	Diagram	Object	Permissible deviation	Measuring instruments	Observations and references to the ISO 230-1 acceptance code
G1	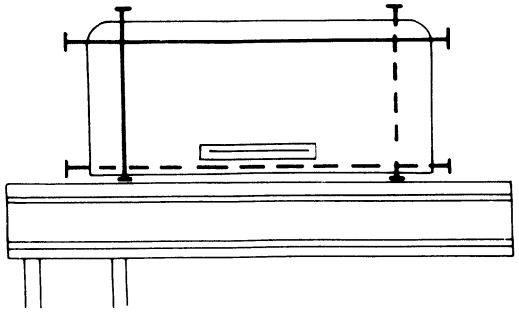	Checking of flatness of the fixed table: a) longitudinal straightness b) transverse straightness	a) and b) 0,2 for L*) ⩽ 630 0,25 for 630 < L ⩽ 1 250 0,3 for L > 1 250	Straightedge and feeler gauges	Subclause 5.212 *) L is the length of the fixed table.
G2	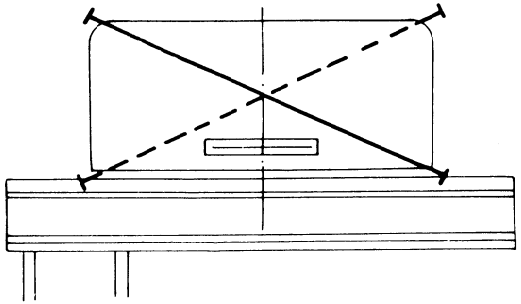	Checking of flatness of the fixed table: c) diagonal straightness	c) 0,3 for L*) ⩽ 630 0,4 for 630 < L ⩽ 1 250 0,5 for L > 1 250	Straightedge and feeler gauges	Subclause 5.212 *) L is the length of the fixed table.
G3	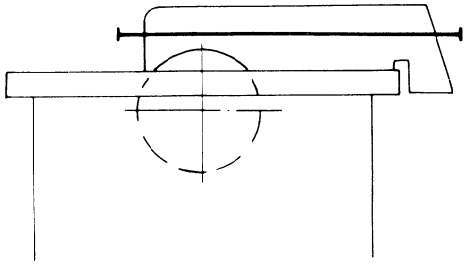	Checking of straightness of the fixed table fence	0,1 for L*) ⩽ 630 0,2 for L > 630	Straightedge and feeler gauges	Subclause 5.212 *) L is the length of the fence.

No.	Diagram	Object	Permissible deviation	Measuring instruments	Observations and references to the ISO 230-1 acceptance code
G4	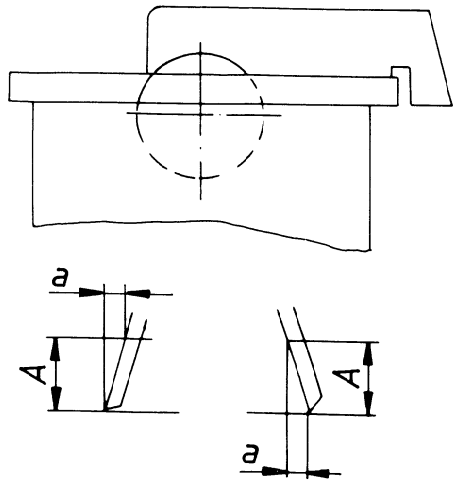	Checking of squareness of the fence to the fixed table	0,2/100 *)	Square and feeler gauges	Subclause 5.512.2 *) Distance A
G5	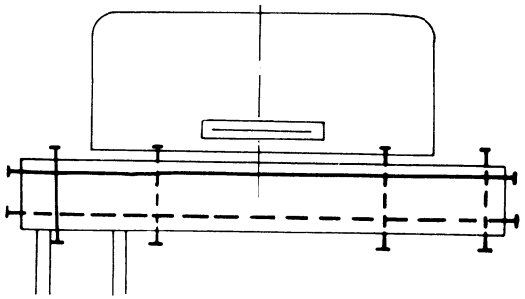	Checking of flatness of the travelling table: a) transverse straightness b) longitudinal straightness	a) 0,2 b) 0,3 for L *) $\leqslant$ 2 000 0,4 for 2 000 $< L \leqslant$ 2 650 0,5 for 2 650 $< L \leqslant$ 3 500 0,6 for $L >$ 3 500	Straightedge and feeler gauges	Subclause 5.212 No convexity. *) L is the length of the travelling table.

No.	Diagram	Object	Permissible deviation	Measuring instruments	Observations and references to the ISO 230-1 acceptance code
G6	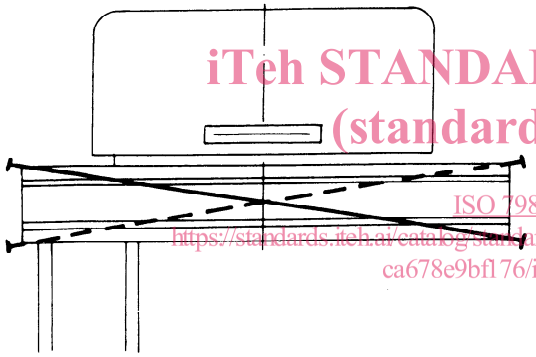	Checking of flatness of the travelling table: c) diagonal straightness	c) 0,3 for L*) $\leqslant$ 2 000 0,4 for 2 000 $< L \leqslant$ 2 650 0,5 for 2 650 $< L \leqslant$ 3 500 0,6 for $L >$ 3 500	Straightedge and feeler gauges	Subclause 5.212 No convexity. *) L is the length of the travelling table.
G7	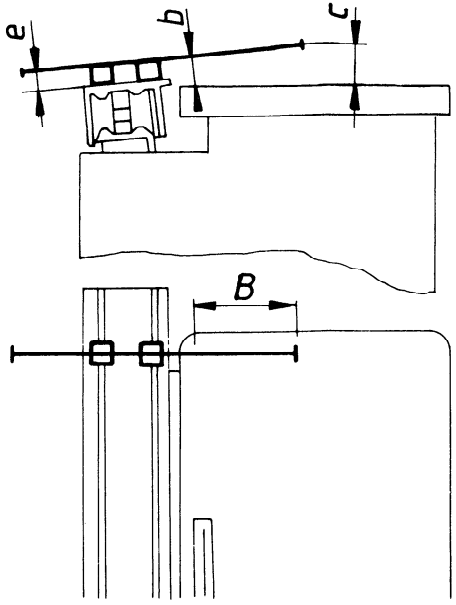	Checking of parallelism of the fixed and travelling table surfaces in a horizontal plane	$B = 450$ $b - e = 0{,}2$ $b \leqslant c$ $c - e = 0{,}2$	Straightedge and feeler gauges	Subclause 5.322 Where the travelling table is supported by an edge arm, the tolerance is doubled at each end of the movement. Travelling table always higher than the fixed table. Measurements to be taken at several positions along the travelling table.

No.	Diagram	Object	Permissible deviation	Measuring instruments	Observations and references to the ISO 230-1 acceptance code
G8	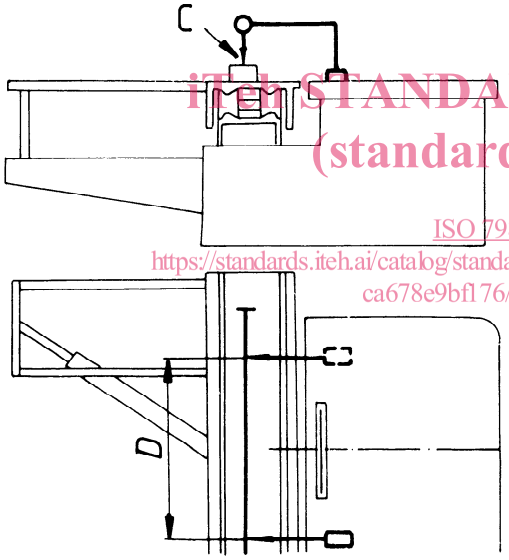	Checking of parallelism of the travelling table surface to the fixed table surface (in the sawing direction)	0,25 for D = 1 000	Straightedge and dial gauge	Subclause 5.412.2 At C this deviation can be doubled at each end for a travelling table stroke greater than 2 650.
G9	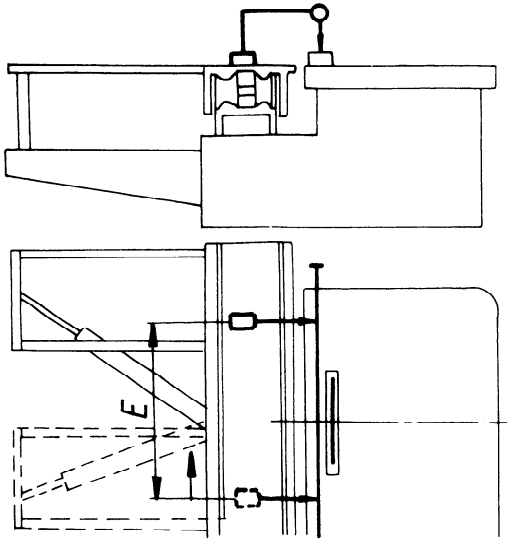	Checking of parallelism of the travelling table motion to the fixed table in a vertical plane	0,4 for E = 1 000	Straightedge and dial gauge	Subclause 5.422.22