SLOVENSKI STANDARD
SIST-TS TS 101 329-5 V1.1.2:2004

01-april-2004

Harmonizacija telekomunikacij in internetnega protokola prek omrežij (TIPHON), 3. izdaja - Kakovost storitve od konca do konca v sistemih TIPHON - 5.del: Metodologije meritve kakovosti storitve (QoS)

Telecommunications and Internet Protocol Harmonization Over Networks (TIPHON) Release 3; End-to-end Quality of Service in TIPHON systems; Part 5: Quality of Service (QoS) measurement methodologies

iTeh STANDARD PREVIEW
(standards.iteh.ai)

SIST-TS TS 101 329-5 V1.1.2:2004
https://standards.iteh.ai/catalog/standards/sist/3ef14a37-d0bd-4637-a771-39b55d26b28e/sist-ts-ts-101-329-5-v1-1-2-2004

Ta slovenski standard je istoveten z: TS 101 329-5 Version 1.1.2

ICS:

33.020	Telekomunikacije na splošno	Telecommunications in general

SIST-TS TS 101 329-5 V1.1.2:2004 en

2003-01.Slovenski inštitut za standardizacijo. Razmnoževanje celote ali delov tega standarda ni dovoljeno.

SIST-TS TS 101 329-5 V1.1.2:2004

iTeh STANDARD PREVIEW
(standards.iteh.ai)

SIST-TS TS 101 329-5 V1.1.2:2004
https://standards.iteh.ai/catalog/standards/sist/3ef14a37-d0bd-4637-a771-39b55d26b28e/sist-ts-ts-101-329-5-v1-1-2-2004

SIST-TS TS 101 329-5 V1.1.2:2004

ETSI TS 101 329-5 V1.1.2 (2002-01)

Technical Specification

Telecommunications and Internet Protocol Harmonization Over Networks (TIPHON) Release 3; End-to-end Quality of Service in TIPHON systems; Part 5: Quality of Service (QoS) measurement methodologies

iTeh STANDARD PREVIEW
(standards.iteh.ai)
SIST-TS TS 101 329-5 V1.1.2:2004
https://standards.iteh.ai/catalog/standards/sist/3ef14a37-d0bd-4637-a771-39b55d26b28e/sist-ts-ts-101-329-5-v1-1-2-2004

SIST-TS TS 101 329-5 V1.1.2:2004

Reference
RTS/TIPHON-05008a

Keywords
internet, IP, methodology, quality, service, system, telephony

ETSI

650 Route des Lucioles
F-06921 Sophia Antipolis Cedex - FRANCE

Tel.: +33 4 92 94 42 00 Fax: +33 4 93 65 47 16

Siret N° 348 623 562 00017 - NAF 742 C
Association à but non lucratif enregistrée à la
Sous-Préfecture de Grasse (06) N° 7803/88

iTeh STANDARD PREVIEW
(standards.iteh.ai)

SIST-TS TS 101 329-5 V1.1.2:2004
https://standards.iteh.ai/catalog/standards/sist/3ef14a37-d0bd-4637-a771-39b55d26b28e/sist-ts-ts-101-329-5-v1-1-2-2004

Important notice

Individual copies of the present document can be downloaded from:
http://www.etsi.org

The present document may be made available in more than one electronic version or in print. In any case of existing or perceived difference in contents between such versions, the reference version is the Portable Document Format (PDF). In case of dispute, the reference shall be the printing on ETSI printers of the PDF version kept on a specific network drive within ETSI Secretariat.

Users of the present document should be aware that the document may be subject to revision or change of status. Information on the current status of this and other ETSI documents is available at
http://portal.etsi.org/tb/status/status.asp

If you find errors in the present document, send your comment to:
editor@etsi.fr

Copyright Notification

No part may be reproduced except as authorized by written permission.
The copyright and the foregoing restriction extend to reproduction in all media.

© European Telecommunications Standards Institute 2002.
All rights reserved.

SIST-TS TS 101 329-5 V1.1.2:2004

Contents

iTeh STANDARD PREVIEW
(standards.iteh.ai)
SIST-TS TS 101 329-5 V1.1.2:2004
https://standards.iteh.ai/catalog/standards/sist/3ef14a37-d0bd-4637-a771-39b55d26b28e/sist-ts-ts-101-329-5-v1-1-2-2004

SIST-TS TS 101 329-5 V1.1.2:2004

iTeh STANDARD PREVIEW
(standards.iteh.ai)
SIST-TS TS 101 329-5 V1.1.2:2004
https://standards.iteh.ai/catalog/standards/sist/3ef14a37-d0bd-4637-a771-39b55d26b28e/sist-ts-ts-101-329-5-v1-1-2-2004

SIST-TS TS 101 329-5 V1.1.2:2004

Intellectual Property Rights

IPRs essential or potentially essential to the present document may have been declared to ETSI. The information pertaining to these essential IPRs, if any, is publicly available for **ETSI members and non-members**, and can be found in ETSI SR 000 314: *"Intellectual Property Rights (IPRs); Essential, or potentially Essential, IPRs notified to ETSI in respect of ETSI standards"*, which is available from the ETSI Secretariat. Latest updates are available on the ETSI Web server (http://webapp.etsi.org/IPR/home.asp).

Pursuant to the ETSI IPR Policy, no investigation, including IPR searches, has been carried out by ETSI. No guarantee can be given as to the existence of other IPRs not referenced in ETSI SR 000 314 (or the updates on the ETSI Web server) which are, or may be, or may become, essential to the present document.

Foreword

This Technical Specification (TS) has been produced by ETSI Project Telecommunications and Internet Protocol Harmonization Over Networks (TIPHON).

The present document is part 5 of a multi-part deliverable covering End-to-end Quality of Service in TIPHON systems, as identified below:

TR 101 329-1: "General aspects of Quality of Service (QoS)";

TS 101 329-2: "Definition of speech Quality of Service (QoS) classes";

TS 101 329-3: "Signalling and control of end-to-end Quality of Service (QoS)";

TS 101 329-5: "Quality of Service (QoS) measurement methodologies";

TR 101 329-6: "Actual measurements of network and terminal characteristics and performance parameters in TIPHON networks and their influence on voice quality";

TR 101 329-7: "Design guide for elements of a TIPHON connection from an end-to-end speech transmission performance point of view".

iTeh STANDARD PREVIEW
(standards.iteh.ai)
SIST-TS TS 101 329-5 V1.1.2:2004
https://standards.iteh.ai/catalog/standards/sist/3ef14a37-d0bd-4637-a771-29b15d26d28f/sist-ts-ts-101-329-5-v1-1-2-2004

Quality of Service aspects of TIPHON Release 4 and 5 systems will be covered in TS 102 024 and TS 102 025 respectively (see Bibliography), and more comprehensive versions of the Release 3 documents listed above will be published as part of Release 4 and 5 as work progresses.

SIST-TS TS 101 329-5 V1.1.2:2004

Introduction

The present document forms one of a series of technical specifications and technical reports produced by TIPHON Working Group 5 addressing Quality of Service (QoS) in TIPHON Systems. The structure of this work is illustrated in figure 1.

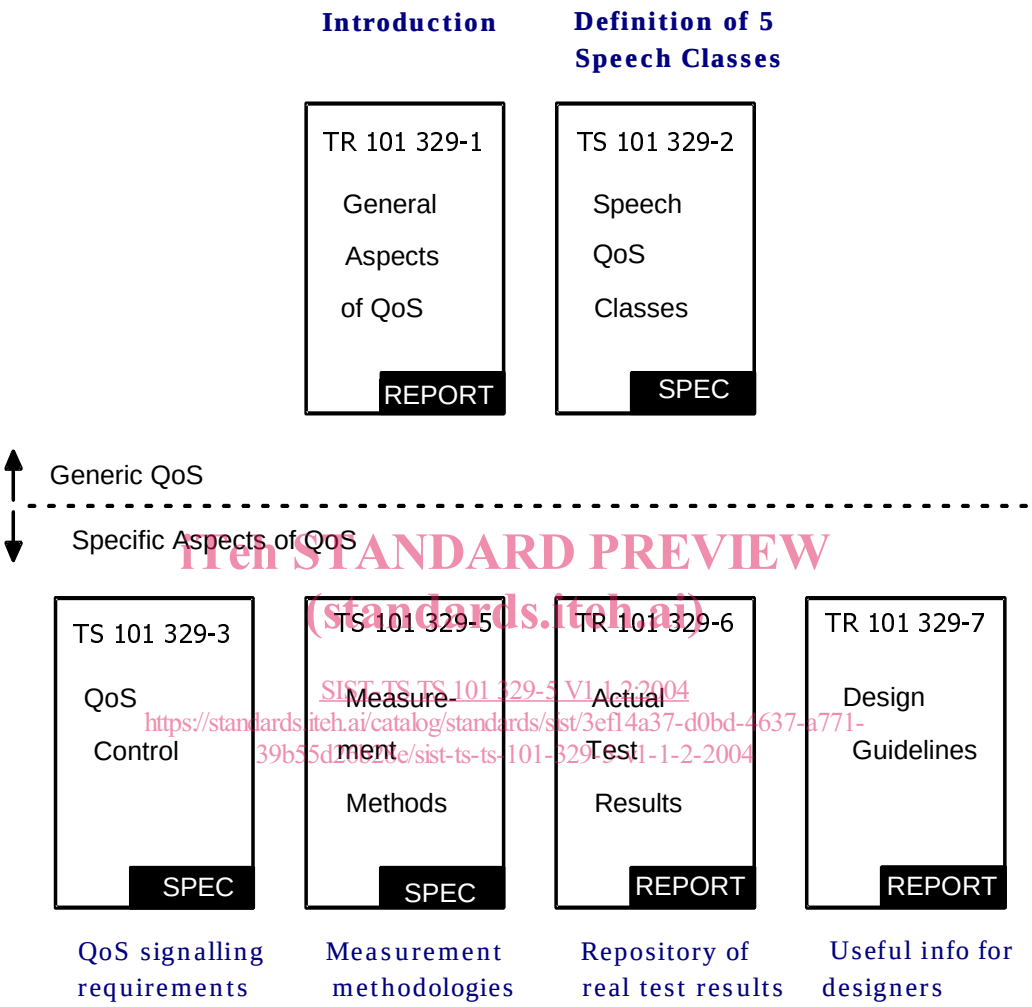

Figure 1: Structure of TIPHON QoS Documentation for Release 3

iTeh STANDARD PREVIEW
(standards.iteh.ai)
SIST-TS TS 101 329-5 V1.1.2:2004
https://standards.iteh.ai/catalog/standards/sist/3ef14a37-d0bd-4637-a771-39b55d1b62ae/sist-ts-ts-101-329-5-v1-1-2-2004

SIST-TS TS 101 329-5 V1.1.2:2004

1 Scope

The present document applies to IP networks that provide voice telephony in accordance with any of the TIPHON scenarios.

It contains:

- test methodologies for end to end QoS parameters;
- test methodologies for network performance parameters.

It should be noted that the work has tried to reference already developed measurement techniques rather than defining new techniques unnecessarily.

Background information and discussions are contained in the General Aspects of QoS document TR 101 329-1 [1].

2 References

The following documents contain provisions which, through reference in this text, constitute provisions of the present document.

- References are either specific (identified by date of publication and/or edition number or version number) or non-specific.
- For a specific reference, subsequent revisions do not apply.
- For a non-specific reference, the latest version applies.

iTeh STANDARD PREVIEW
(standards.iteh.ai)

[1] ETSI TR 101 329-1: "Telecommunications and Internet Protocol Harmonization Over Networks (TIPHON) Release 3; End to End Quality of Service in TIPHON Systems; Part 1: General aspects of Quality of Service (QoS)".

SIST-TS TS 101 329-5 V1.1.2:2004
https://standards.iteh.ai/catalog/standards/sist/3ef14a37-d0bd-4637-a771-39b55d26b28e/sist-ts-ts-101-329-5-v1-1-2-2004

[2] ITU-T Recommendation P.800: "Methods for subjective determination of transmission quality".

[3] ITU-T Recommendation G.131: "Control of talker echo".

[4] Draft ITU-T Recommendation P.861: "Perceptual Evaluation of Speech Quality (PESQ), an objective method for end-to-end speech quality assessment of narrowband telephone networks and speech codecs".

[5] ITU-T Recommendation G.169: "Automatic level control devices".

[6] ITU-T Recommendation P.340: "Transmission characteristics of hands-free telephones".

[7] ITU-T Recommendation P.76: "Determination of loudness ratings; fundamental principles".

[8] ITU-T Recommendation P.79: "Calculation of Loudness Ratings for telephone sets".

[9] ITU-T Recommendation G.107: "The E-Model, a computational model for use in transmission planning".

[10] ITU-T Recommendation G.108: "Application of the E-model: A planning guide".

[11] ITU-T Recommendation G.177: "Transmission planning for voice-band services over hybrid Internet/PSTN connections".

[12] ITU-T Recommendation P.59: "Artificial conversational speech".

[13] ITU-T Recommendation P.501: "Test signals for use in telephonometry".

[14] ITU-T Recommendation P.502: "Objective test methods for speech communication systems, using complex test signals".

SIST-TS TS 101 329-5 V1.1.2:2004

[15] ITU-T Recommendation P.581: "Use of head and torso simulator (HATS) for hands-free terminal testing".

[16] ITU-T Recommendation P.831: "Subjective performance evaluation of network echo cancellers".

[17] ITU-T Recommendation P.832: "Subjective performance evaluation of Hands-free Terminals".

[18] ITU-T Recommendation P.51: "Artificial mouths".

[19] ITU-T Recommendation P.57: "Artificial ears".

[20] ITU-T Recommendation P.58: "Head and torso simulator for telephonometry".

[21] ITU-T Recommendation P.64: "Determination of sensitivity/frequency characteristics of local telephone systems".

[22] ITU-T Recommendation P.50: "Artificial Voices".

[23] ETSI TBR 8: "Integrated Services Digital Network (ISDN); Telephony 3,1 kHz teleservice; Attachment requirements for handset terminals".

[24] ITU-T Contribution COM12-42 Federal Republic of Germany: "Listening only test results for hands-free telephones and their dependence upon room surroundings (1997)".

[25] ITU-T Recommendation G.711: "Pulse code modulation (PCM) of voice frequencies".

[26] ITU-T Recommendation G.726: "40, 32, 24, 16 kbit/s Adaptive Differential Pulse Code Modulation (ADPCM)".

[27] ITU-T Recommendation G.113 Appendix 1: "Transmission Impairments - Appendix I: Provisional planning values for the equipment impairment factor I_e".

[28] ITU-T Recommendation G.114: "One-way transmission time".

[29] ITU-T Contribution COM12-D139 France Télécom R&D (Q14/12): "Study of the relationship between instantaneous and overall subjective speech quality for time-varying quality speech sequences: influence of a recency effect (Delayed Contributions 9-18 May 2000)".

[30] ANSI T1A1.7/98-031: "Testing the quality of connections having time varying impairments".

[31] ITU-T Recommendations P.831: "Subjective performance evaluation of network echo cancellers".

[32] ITU-T Recommendations P.501: "Test signals for use in telephonometry".

[33] ITU-T Recommendations G.108: "Application of the E-model: A planning guide".

iTeh STANDARD PREVIEW
(standards.iteh.ai)
SIST-TS TS 101 329-5 V1.1.2:2004
https://standards.iteh.ai/catalog/standards/sist/2ef04b37-d0bd-4637-a771-39b55d26b28e/sist-ts-ts-101-329-5-v1-1-2-2004

3 Definitions, symbols and abbreviations

3.1 Definitions

For the purposes of the present document, the following terms and definitions apply:

codec: combined speech encoder and decoder

3.2 Symbols

For the purposes of the present document, the following symbols apply:

ms	milliseconds
s	seconds

SIST-TS TS 101 329-5 V1.1.2:2004

3.3 Abbreviations

For the purposes of the present document, the following abbreviations apply:

CRC	Cyclic Redundancy Check
DTX	Discontinuous Transmission
FFT	Fast Fourier Transform
GSM FR	Global System for Mobile, Full Rate codec
IP	Internet Protocol
LR	Loudness Ratings
LSTR	Listener Sidetone Rating
MNRU	Modulated Noise Reference Unit
MOS	Mean Opinion Score
Nc	Circuit Noise referred to the 0 dBr-point
OLR	Overall Loudness Rating
PDD	Post Dial Delay
PDV	Packet Delay Variation
qdu	Number of Quantizing Distortion Units
QoS	Quality of Service
RLR	Receive Loudness Rating
SCN	Switched Circuit Network
SDSD	Start Dial Signal Delay
SLR	Send Loudness Rating
STMR	Sidetone Masking Rating
TCLw	Terminal Coupling Loss (weighted)
TELR	Talker Echo Loudness Rating
UDP	User Datagram Protocol
VoIP	Voice over Internet Protocol
WEPL	Weighted Echo Path Loss

iTeh STANDARD PREVIEW
(standards.iteh.ai)
SIST-TS TS 101 329-5 V1.1.2:2004
https://standards.iteh.ai/catalog/standards/sist/3ef14a37-d0bd-4637-a771-39b55d26b28e/sist-ts-ts-101-329-5-v1-1-2-2004

SIST-TS TS 101 329-5 V1.1.2:2004

4 Test Set-up for Terminals and Systems Including Terminals

The general access to terminals is described in figure 2. The preferred way of testing is the connection of the terminal to a network simulator or a complete network. When testing without acoustical access, the test sequences can be fed to the electrical interface as indicated in figure 2. The test sequences are fed in either electrically, using a reference codec or using the direct signal processing approach or acoustically using ITU-T specified devices such as artificial ear and mouth according to the Recommendations P.51 [18], P.57 [19] and P.58 [20]. The positioning and set-up for handset type telephones is described in ITU-T Recommendation P.64 [21], for hands-free type telephones the set-up is described in ITU-T Recommendation P.581 [15]. The test set-up can be used on both sides of a connection if complete configurations are tested.

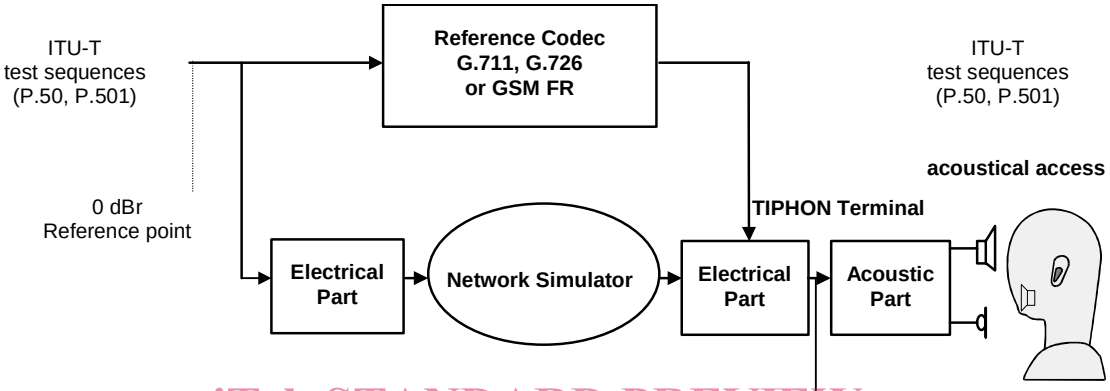

iTeh STANDARD PREVIEW
(standards.iteh.ai)

NOTE: Packet loss distribution is for further study.

Figure 2: Methodology for testing TIPHON Terminal/Systems Speech Quality

SIST-TS TS 101 329-5 V1.1.2:2004
https://standards.iteh.ai/catalog/standards/sist/3ef14a37-d0bd-4637-a771-39b55d26b28e/sist-ts-ts-101-329-5-v1-1-2-2004

5 Call Establishment Measurements

5.1 Start Dial Signal Delay

Definition

Time in milliseconds for the dial tone to be audible after the phone is placed off-hook from the idle state.

Test Metrics

- start dial signal delay/ms;
- percentage of calls with no dial tone.

Comments

None.

5.2 Post Dial Delay

Definition

Time in milliseconds between dialling the last digit and an audible tone being heard at the originating end. The audible tone is typically ring-back or the engaged tone.