PUBLICLY
AVAILABLE
SPECIFICATION

Pre-Standard

IEC PAS 62453-5

First edition
2006-05

Withdrawn

Field Device Tool (FDT) interface specification –

Part 5:
FOUNDATION FIELDBUS communication

iTeh Standards
(https://standards.iteh.ai)
Document Preview
IEC PAS 62453-5:2006
https://standards.iteh.ai/catalog/standards/iec/d6a5eb44-a496-4e66-951c-951a9544267d/iec-pas-62453-5-2006

Reference number
IEC/PAS 62453-5:2006(E)

Publication numbering

As from 1 January 1997 all IEC publications are issued with a designation in the 60000 series. For example, IEC 34-1 is now referred to as IEC 60034-1.

Consolidated editions

The IEC is now publishing consolidated versions of its publications. For example, edition numbers 1.0, 1.1 and 1.2 refer, respectively, to the base publication, the base publication incorporating amendment 1 and the base publication incorporating amendments 1 and 2.

Further information on IEC publications

The technical content of IEC publications is kept under constant review by the IEC, thus ensuring that the content reflects current technology. Information relating to this publication, including its validity, is available in the IEC Catalogue of publications (see below) in addition to new editions, amendments and corrigenda. Information on the subjects under consideration and work in progress undertaken by the technical committee which has prepared this publication, as well as the list of publications issued, is also available from the following:

- **IEC Web Site (www.iec.ch)**

- **Catalogue of IEC publications**

  The on-line catalogue on the IEC web site (www.iec.ch/searchpub) enables you to search by a variety of criteria including text searches, technical committees and date of publication. On-line information is also available on recently issued publications, withdrawn and replaced publications, as well as corrigenda.

- **IEC Just Published**

  This summary of recently issued publications (www.iec.ch/online_news/ justpub) is also available by email. Please contact the Customer Service Centre (see below) for further information.

- **Customer Service Centre**

  If you have any questions regarding this publication or need further assistance, please contact the Customer Service Centre:

  Email: custserv@iec.ch
  Tel: +41 22 919 02 11
  Fax: +41 22 919 03 00

Withdrawn
iTeh Standards
(https://standards.iteh.ai)
Document Preview
https://standards.iteh.ai/catalog/standards/sist/...iec-pas-62453-5-2006

PUBLICLY
AVAILABLE
SPECIFICATION

IEC PAS 62453-5

Pre-Standard

First edition
2006-05

Withdrawn

Field Device Tool (FDT) interface specification –

Part 5:
FOUNDATION FIELDBUS communication

iTeh Standards
(https://standards.iteh.ai)
Document Preview
IEC PAS 62453-5:2006
https://standards.iteh.ai/catalog/standards/iec/d6a5eb44-a496-4e66-951c-951a9544267d/iec-pas-62453-5-2006

© IEC 2006 — Copyright - all rights reserved

No part of this publication may be reproduced or utilized in any form or by any means, electronic or mechanical, including photocopying and microfilm, without permission in writing from the publisher.

International Electrotechnical Commission, 3, rue de Varembé, PO Box 131, CH-1211 Geneva 20, Switzerland
Telephone: +41 22 919 02 11 Telefax: +41 22 919 03 00 E-mail: inmail@iec.ch Web: www.iec.ch

Commission Electrotechnique Internationale
International Electrotechnical Commission
Международная Электротехническая Комиссия

PRICE CODE XC

For price, see current catalogue

CONTENTS

FOREWORD....4
INTRODUCTION....6
1 Scope....7
2 Normative references....7
3 Solution concept....7
3.1 Overview....7
3.2 Unique identifier....11
3.2.1 Component categories....11
3.2.2 Bus category....12
4 FF communication....13
4.1 Connection management....13
4.1.1 FMS connection....13
4.1.2 HSE connection....14
4.2 Abort....14
4.2.1 OnAbort indication....14
4.2.2 Abort request....15
4.3 Relation of FMS requests and FMS responses....15
4.4 Levels of support....16
5 Provided data....17
5.1 Interface IDtmParameter....17
5.2 SingleDataAccess interfaces....17
5.2.1 DTM....17
5.2.2 BTM....17
6 Protocol specific usage of XML attributes....18
7 XML schemas and definitions....19
7.1 DTM....19
7.1.1 Topology scan schema....19
7.1.2 DTM FF schema....19
7.2 BTM....19
7.2.1 Parameter access - FF specific definitions....19
7.3 Communication....31
7.3.1 ChannelParameter Schema....31
7.3.2 FF data type....32
7.3.3 FF FMS data types....33
7.3.4 H1 communication schema....36
7.3.5 HSE communication schema....37
7.3.6 BTM – DTM communication schema....39
7.4 Fieldbus management....40
7.5 H1 management schema....40
7.5.1 HSE management schema....55
7.6 Fieldbus Foundation device identification....69
7.6.1 FDTFieldbusIdentSchema.xml....69

BIBLIOGRAPHY....77

Withdrawn
iTeh Standards
(https://standards.iteh.ai)
Document Preview
IEC PAS 62453-5:2006
https://standards.iteh.ai/catalog/standards/sist/...-pas-62453-5-2006

Figure 1 — Example of System Architecture and Components 8
Figure 2 — Object relations for H1 DeviceDTM....8
Figure 3 — Object relations for HSE DTMs....10
Figure 4 — Creation of an FMS connection 13
Figure 5 — Termination of an FMS connection 14

Table 1 — Explanation of object relations for H1 DeviceDTM....9
Table 2 — Explanation of object relations for HSE DTMs....10
Table 3 — Relation of FMS requests and FMS responses....15
Table 4 — Levels of support 16
Table 5 — FF specific use of XML attributes....18
Table 6 — List of the standard block parameter mnemonic 20
Table 7 — Datatype definitions and mapping (structured types) 27
Table 8 — Datatype definitions and mapping (simple types) 30
Table 9 — FoundationFieldbusChannelParameterSchema – attributes and elements 31
Table 10 — FdtFFDataTypesSchema – attributes....32
Table 11 — FdtFFDataTypesSchema – elements 33
Table 12 — FdtFFFMSDataTypesSchema – attributes....33
Table 13 — FdtFFFMSDataTypesSchema – elements 34
Table 14 — FdtFFH1CommunicationSchema – attributes....36
Table 15 — FdtFFH1CommunicationSchema –elements....37
Table 16 — FdtFFHSECommunicationSchema – attributes....38
Table 17 — FdtFFHSECommunicationSchema –elements 38
Table 18 — BtmFFCommunicationSchema – attributes and elements 39
Table 19 — FDTFoundationFieldbusH1ManagementSchema – attributes....40
Table 20 — FDTFoundationFieldbusH1ManagementSchema –elements 46
Table 21 — FDTFoundationFieldbusHSEManagementSchema – attributes 55
Table 22 — FDTFoundationFieldbusHSEManagementSchema – elements....60
Table 23 — FDTFieldbusIdentSchema - attributes for Foundation Fieldbus H1....70
Table 24 — FDTFieldbusIdentSchema - attributes for Foundation Fieldbus HSE 71
Table 25 — FDTFieldbusIdentSchema - attributes for Foundation Fieldbus Blocks....72
Table 26 — FDTFieldbusIdentSchema - protocol independent attributes and elements....75
Table 27 — FieldbusScanTypeIdentSchema – attributes and elements 75
Table 28 — FieldbusDeviceTypeIdentSchema – attributes and elements 76

iTeh Standards
(https://standards.iteh.ai)
Document Preview
IEC PAS 62453-5:2006
https://standards.iteh.ai/catalog/standards/iec/...-5-2006
Withdrawn

INTERNATIONAL ELECTROTECHNICAL COMMISSION

_____

Field Device Tool (FDT) interface specification –

Part 5: FOUNDATION FIELBUS communication

FOREWORD

1) The International Electrotechnical Commission (IEC) is a worldwide organization for standardization comprising all national electrotechnical committees (IEC National Committees). The object of IEC is to promote international co-operation on all questions concerning standardization in the electrical and electronic fields. To this end and in addition to other activities, IEC publishes International Standards, Technical Specifications, Technical Reports, Publicly Available Specifications (PAS) and Guides (hereafter referred to as "IEC Publication(s)"). Their preparation is entrusted to technical committees; any IEC National Committee interested in the subject dealt with may participate in this preparatory work. International, governmental and non-governmental organizations liaising with the IEC also participate in this preparation. IEC collaborates closely with the International Organization for Standardization (ISO) in accordance with conditions determined by agreement between the two organizations.
2) The formal decisions or agreements of IEC on technical matters express, as nearly as possible, an international consensus of opinion on the relevant subjects since each technical committee has representation from all interested IEC National Committees.
3) IEC Publications have the form of recommendations for international use and are accepted by IEC National Committees in that sense. While all reasonable efforts are made to ensure that the technical content of IEC Publications is accurate, IEC cannot be held responsible for the way in which they are used or for any misinterpretation by any end user.
4) In order to promote international uniformity, IEC National Committees undertake to apply IEC Publications transparently to the maximum extent possible in their national and regional publications. Any divergence between any IEC Publication and the corresponding national or regional publication shall be clearly indicated in the latter.
5) IEC provides no marking procedure to indicate its approval and cannot be rendered responsible for any equipment declared to be in conformity with an IEC Publication.
6) All users should ensure that they have the latest edition of this publication.
7) No liability shall attach to IEC or its directors, employees, servants or agents including individual experts and members of its technical committees and IEC National Committees for any personal injury, property damage or other damage of any nature whatsoever, whether direct or indirect, or for costs (including legal fees) and expenses arising out of the publication, use of, or reliance upon, this IEC Publication or any other IEC Publications.
8) Attention is drawn to the Normative references cited in this publication. Use of the referenced publications is indispensable for the correct application of this publication.
9) Attention is drawn to the possibility that some of the elements of this IEC Publication may be the subject of patent rights. IEC shall not be held responsible for identifying any or all such patent rights.

A PAS is a technical specification not fulfilling the requirements for a standard but made available to the public .

IEC-PAS 62453-5 has been processed by subcommittee 65C: Digital communications, of IEC technical committee 65: Industrial-process measurement and control.

The text of this PAS is based on the following document:	This PAS was approved for publication by the P-members of the committee concerned as indicated in the following document
Draft PAS	**Report on voting**
65C/398A/NP	65C/411/RVN

Following publication of this PAS, which is a pre-standard, the technical committee or subcommittee concerned will transform it into an International Standard.

Withdrawn
Document Preview
IEC PAS 62453-5:2006
https://standards.iteh.ai/catalog/standards/sist/d6...eb44-a496-4eb6-951c-951a9544267d/iec-pas-62453-5-2006

This PAS shall remain valid for an initial maximum period of three years starting from 2006-05. The validity may be extended for a single three-year period, following which it shall be revised to become another type of normative document or shall be withdrawn.

IEC 62453 consists of the following parts under the general title *Field Device Tool (FDT) interface specification:*

Part 1: Concepts and detailed description

Part 2: INTERBUS communication

Part 3: PROFIBUS communication

Part 4: HART communication

Part 5: FOUNDATION FIELDBUS communication

Withdrawn
iTeh Standards
(https://standards.iteh.ai)
Document Preview
IEC PAS 62453-5:2006
https://standards.iteh.ai/catalog/standards/iec/d6a5eb44-a496-4e66-951c-951a9544267d/iec-pas-62453-5-2006

INTRODUCTION

This PAS is an interface specification for developers of FDT components for Function Control and Data Access within a Client Server architecture. The specification is a result of an analysis and design process to develop standard interfaces to facilitate the development of servers and clients by multiple vendors that shall inter-operate seamlessly.

With the integration of fieldbusses into control systems, there are a few other tasks which must be performed. This applies to fieldbusses in general. Although there are fieldbus- and device-specific tools, there is no unified way to integrate those tools into higher level system-wide planning or engineering tools. In particular, for use in extensive and heterogeneous control systems, typically in the area of the process industry, the unambiguous definition of engineering interfaces that are easy to use for all those involved, is of great importance.

A device-specific software component, called DTM (Device Type Manager), is supplied by the field device manufacturer with its device. The DTM is integrated into engineering tools via the FDT interfaces defined in this specification. The approach to integration is in general open for all kind of fieldbusses and thus meets the requirements for integrating different kinds of devices into heterogeneous control systems.

Withdrawn
iTeh Standards
(https://standards.iteh.ai)
Document Preview
IEC PAS 62453-5:2006
https://standards.iteh.ai/catalog/standards/iec/d6a5eb44-a496-4e66-951c-951a9544267d/iec-pas-62453-5-2006

Field Device Tool (FDT) interface specification –

Part 5: FOUNDATION FIELDBUS communication

1 Scope

This part of IEC 62435 provides information for integrating the FOUNDATION FIELDBUS (FF) protocol into the FDT interface specification (IEC 62453-1).

This PAS describes communication schemas, protocol-specific extensions and the means for block (e.g. transducer, resource or function blocks) representation.

The new protocol-specific XML schemas are based on FF specifications for H1 and HSE protocols. Furthermore, the schemas contain information about the device that is needed by systems to configure FF Devices.

The focus of this part is Foundation Fieldbus device configuration.

2 Normative references

The following referenced documents are indispensable for the application of this document. For dated references, only the edition cited applies. For undated references, the latest edition of the referenced document (including any amendments) applies

IEC 62453-1: *Field Device Tool (FDT) interface specification – Part 1: Concepts and detailed description*

IEC 61158 (all parts), *Digital data communications for measurement and control – Fieldbus for use in industrial control systems*

iTeh Standards
(https://standards.iteh.ai)
Document Preview
IEC PAS 62453-5:2006
https://standards.iteh.ai/catalog/standards/iec/d6a6eb44-a496-4e66-951c-951a9544267d/iec-pas-62453-5-2006
Withdrawn

3 Solution concept

3.1 Overview

For the solution, this part provides communication schemas, protocol-specific extensions and means for block (e.g. resource, transducer or function blocks) configuration.

The communication schemas are created to support System Management (SM), Network Management (NM) and Fieldbus Message Specification (FMS).

Separate schemas are designed to support the different management structures for H1 and HSE devices.

Protocol-specific schemas, as required by the FDT Specification, can be used to identify Foundation Fieldbus devices and their internal structure.

A Foundation Fieldbus device is represented by a Device Type Manager (DTM) together with a group of Block Type Manager (BTM). The BTMs represent the function block functionality in an FF device.

The internal device structure is represented by the following topology, see Figure 1.

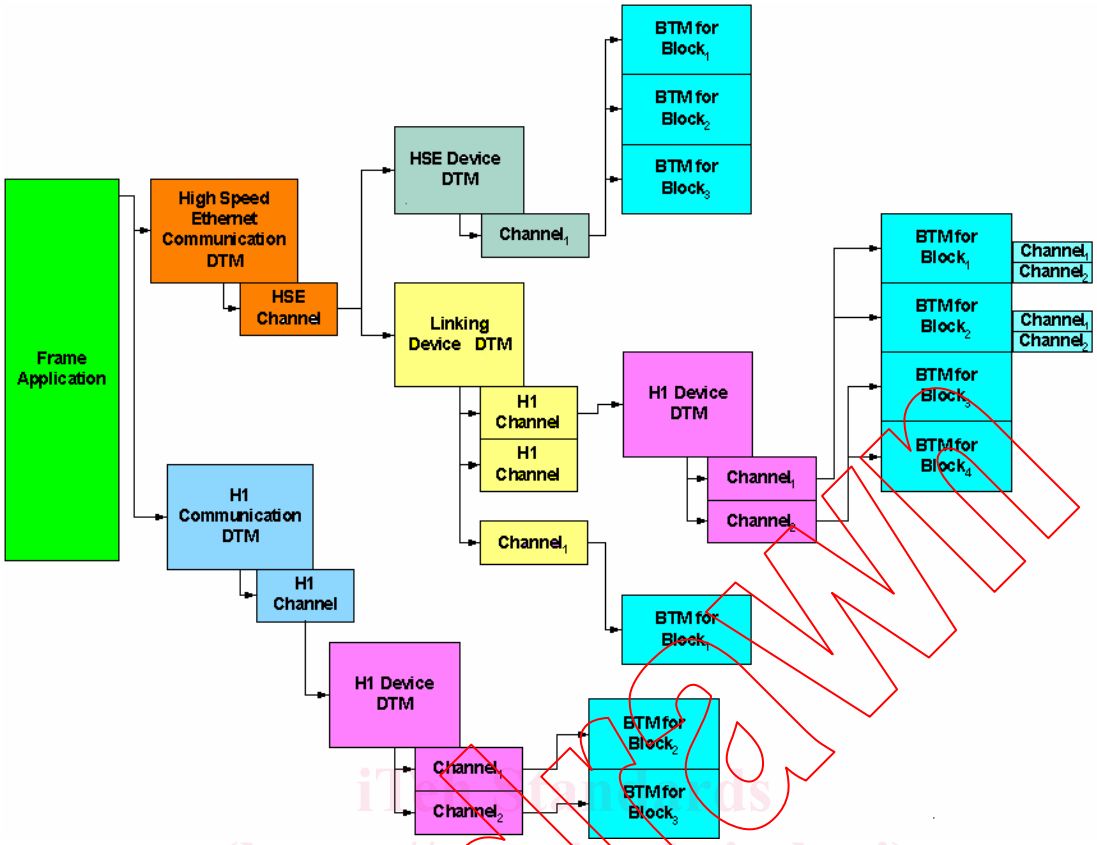

Figure 1 – Example of System Architecture and Components

The following Figure 2 shows all possible object relations for an H1 DeviceDTM.

https://standards.iteh.ai/catalog/standards/iec/d6a5eb44-a496-4e66-951c-951a9544267d/iec-pas-62453-5-2006

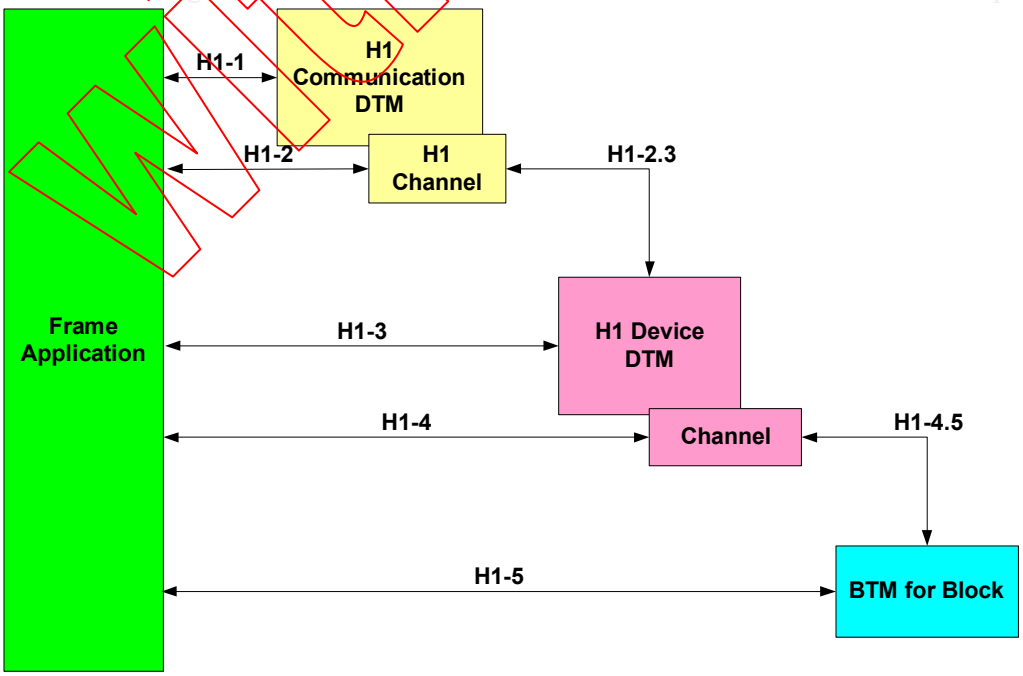

Figure 2 – Object relations for H1 DeviceDTM

For an explanation of the figure components see the following Table 1.

Table 1 — Explanation of object relations for H1 DeviceDTM

Relation	Type of information	Used schemas	Example
H1-1	Management Parameter Access	FdtFFH1ManagementSchema FdtFFDataTypesSchema	FDTFoundationFieldbusH1ManagementSchema
H1-2	Network Topology	DtmFFSchema FdtFFDataTypesSchema FdtFFHseCommunicationSchema	DTMFoundationFieldbusDeviceSchema
	Channel Parameter Access	FDTBasicChannelParameterSchema	FDTFoundationFieldbusChannelParameterSchema
H1-3	Management Parameter Access	FdtFFH1ManagementSchema FdtFFDataTypesSchema	FDTFoundationFieldbusH1ManagementSchema
H1-4	List of instantiated blocks	DtmFFSchema BtmDataTypesSchema FdtFFBlockSchema	BTMTopologyScanSchema
	Channel Parameter Access	FDTBasicChannelParameterSchema	FDTFoundationFieldbusChannelParameterSchema
H1-5	Block Information	BtmInformationSchema BtmDataTypesSchema	BTMInformationSchema
	Initialization of BTM	BtmInitSchema BtmDataTypesSchema	BTMInitSchema
	Parameter Access	BtmParameterSchema BtmDataTypesSchema	BTMParameterSchema
H1-2.3	Communication	FdtFFFmsSchema FdtFFH1CommunicationSchema FdtFFDataTypesSchema	FDTFoundationFieldbusFMSSchema FDTFoundationFieldbusH1Schema
H1-4.5	DTM-BTM Communication	FdtFFFmsSchema BTMFFCommunicationSchema BtmDataTypesSchema FdtFFDataTypesSchema	FDTFoundationFieldbusFMSSchema BtmCommunicationInstanceConnReq.xml BtmCommunicationInstanceConnResp.xml BtmCommunicationInstanceFmsReadReq.xml BtmCommunicationInstanceFmsReadResp.xml

Withdrawn
iTeh Standards
(https://standards.iteh.ai)
Document Preview
IEC PAS 62453-5:2006
https://standards.iteh.ai/catalog/standards/iec/...-a496-4e66-951c-951a9544267d/iec-pas-62453-5-2006

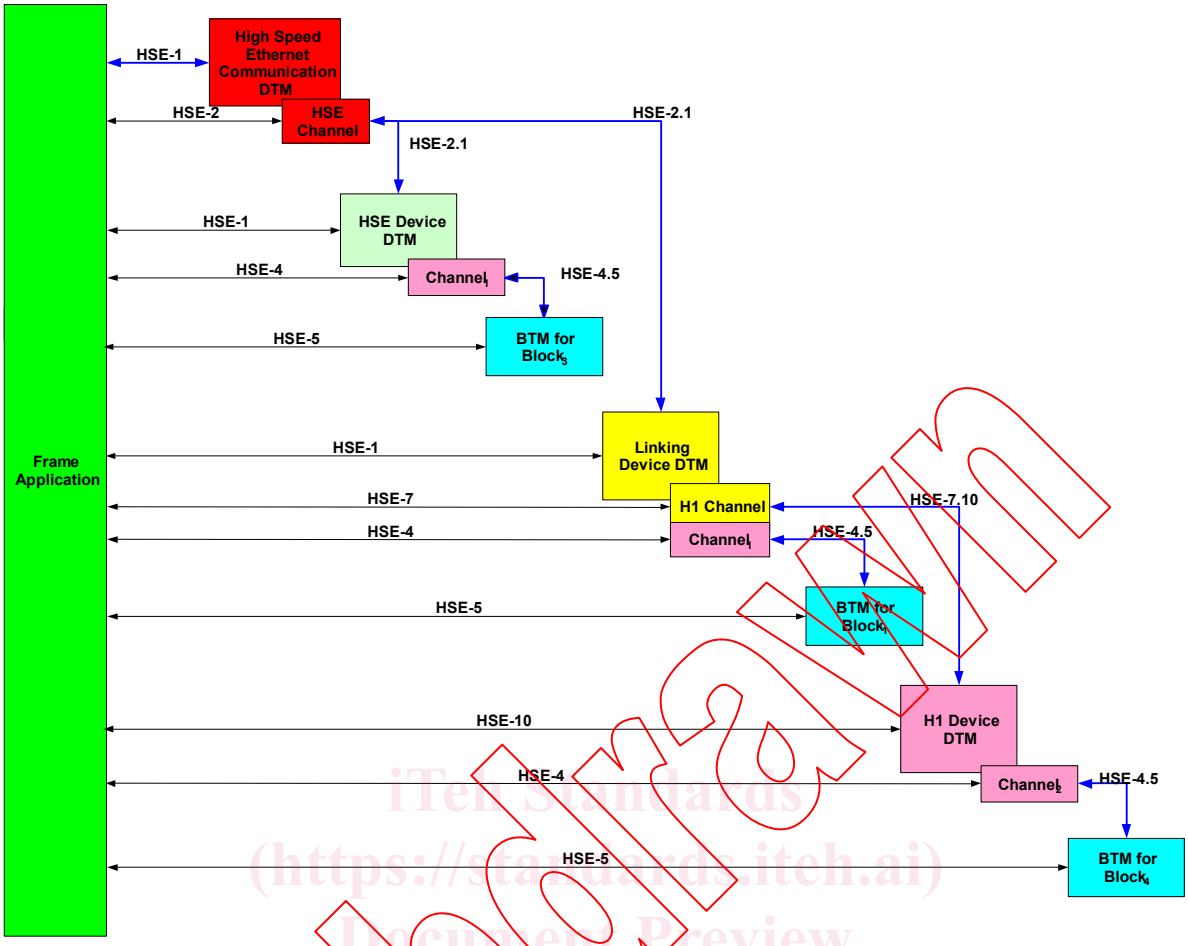

Figure 3 – Object relations for HSE DTMs

In this Figure 3, blue lines show the object hierarchy as it is managed in the FDT Frame Application. The relations are explained in following Table 2.

Table 2 – Explanation of object relations for HSE DTMs

Relation	Type of information	Used schemas	Examples
HSE-1	Management Parameter Access	FdtFFHSEManagementSchema	FDTFoundationFieldbusHSEManagement Schema
HSE-2	Network Topology	DtmFFSchema	DTMFoundationFieldbusDeviceSchema
	Channel Parameter Access	FdtFFChannelParameterSchema	FDTFoundationFieldbusChannelParameter Schema
HSE-2.1	Communication	FdtFFFmsSchema FdtFFHseCommunicationSchema FdtFFDataTypesSchema	FDTFoundationFieldbusFMSSchema FDTFoundationFieldbusHSESchema
HSE-4.5	DTM-BTM Communication	FdtFFFmsSchema BTMFFCommunicationSchema FdtFFDataTypesSchema BtmDataTypesSchema	FDTFoundationFieldbusFMSSchema BtmCommunicationInstanceConnReq.xml BtmCommunicationInstanceConnResp.xml BtmCommunicationInstanceFmsReadReq.xml BtmCommunicationInstanceFmsReadResp.xml

Withdrawn
iTeh Standards
(https://standards.iteh.ai)
Document Preview
IEC PAS 62453-5:2006

Relation	Type of information	Used schemas	Examples
HSE-4	List of instantiated blocks	DtmFFSchema FdtFFBlockSchema BtmDataTypesSchema	BTMTopologyScanSchema
	Channel Parameter Access	FDTBasicChannelParameterSchema	FDTFoundationFieldbusChannelParameter Schema
HSE-5	Block Information	BtmInformationSchema BtmDataTypesSchema	BTMInformationSchema
	Initialization of BTM	BtmInitSchema BtmDataTypesSchema	BTMInitSchema
	Parameter Access	BtmParameterSchema BtmDataTypesSchema	BTMParameterSchema
HSE-7	Network Topology	DtmFFSchema FdtFFDataTypesSchema FdtFFHseCommunicationSchema FdtFFBlockSchema	DTMFoundationFieldbusDeviceSchema
	Channel Parameter Access	FdtFFChannelParameterSchema FdtFFH1ManagementSchema	FDTFoundationFieldbusChannelParameter Schema
	Parameter Access	BtmParameterSchema	BTMParameterSchema
HSE-10	Management Parameter Access	FdtFFH1ManagementSchema FdtFFDataTypesSchema	FDTFoundationFieldbusH1Management Schema
HSE-7.10	Communication	FdtFFFMSSchema FdtFFH1CommunicationSchema FdtFFDataTypesSchema	FDTFoundationFieldbusFMSSchema FDTFoundationFieldbusH1Schema

Withdrawn
iTeh Standards
(https://standards.iteh.ai)
Document Preview
IEC PAS 62453-5:2006
https://standards.iteh.ai/catalog/standards/iec/d6a1eb44-a496-4e66-951c-951a954426 7d/iec-pas-62453-5-2006

3.2 Unique identifier

3.2.1 Component categories

For device-specific BTMs, a bus category (CATID) must be defined for the protocol between DTM and BTM.

The bus category is used by the Frame Application to identify the device-specific blocks. The Frame Application can prevent a device-specific block from Device A being assigned to a Device B that does not support the block.

Different protocols defined by different CATIDs can use the same communication schemas.

CATID description in the registry	Symbolic name of the CATID	UUID of the CATID	Description
"FDT FF STANDARD BLOCK"	CATID_FDT_FF_STD_ BLOCK	{036D1693-387B-11D4-86E1-00E0987270B9}	For FDT FF standard block protocol

The following table shows the valid combination of category ids.

Symbolic name of the CATID	CATID_FDT_DTM	CATID_FDT_DEVICE	CATID_FDT_MODULE	CATID_FDT_BTM	CATID_FDT_STD_BLOCK
CATID_FDT_BTM					√
CATID_FDT_STD_BLOCK				√	

3.2.2 Bus category

FF protocol is identified by the following unique identifier in busCategory attributes within XML BusCategory elements.

BusCategory Element	Description
036D1691-387B-11D4-86E1-00E0987270B9	Object supports FF H1 protocol
036D1692-387B-11D4-86E1-00E0987270B9	Object supports FF HSE protocol
036D1693-387B-11D4-86E1-00E0987270B9	For FDT FF standard block protocol

iTeh Standards
(https://standards.iteh.ai)
Document Preview
IEC PAS 62453-5:2006
https://standards.iteh.ai/catalog/standards/iec/d6a5eb44-a496-4e66-951c-951a9544267d/iec-pas-62453-5-2006
Withdrawn