SLOVENSKI STANDARD
SIST EN 13763-8:2004

01-januar-2004

Eksplozivi za civilno uporabo – Detonatorji in zakasnilniki – 8. del: Ugotavljanje odpornosti nepopolnih detonatorjev proti tresljajem

Explosives for civil uses - Detonators and relays - Part 8: Determination of the resistance to vibration of plain detonators

Explosivstoffe für zivile Zwecke - Zünder und Verzögerungselemente - Teil 8: Bestimmung des Widerstandes von Sprengkapseln gegen Erschütterung

Explosifs a usage civil - Détonateurs et relais - Partie 8: Détermination de la résistance aux vibrations de la charge de détonateur

Ta slovenski standard je istoveten z: EN 13763-8:2003

ICS:

71.100.30 Eksplozivi. Pirotehnika Explosives. Pyrotechnics

SIST EN 13763-8:2004 en

EUROPEAN STANDARD

NORME EUROPÉENNE

EUROPÄISCHE NORM

EN 13763-8

November 2003

ICS 71.100.30

English version

Explosives for civil uses - Detonators and relays - Part 8: Determination of the resistance to vibration of plain detonators

Explosifs à usage civil - Détonateurs et relais - Partie 8: Détermination de la résistance aux vibrations de la charge de détonateur

Explosivstoffe für zivile Zwecke - Zünder und Verzögerungselemente - Teil 8: Bestimmung des Widerstandes von Sprengkapseln gegen Erschütterung

This European Standard was approved by CEN on 1 September 2003.

CEN members are bound to comply with the CEN/CENELEC Internal Regulations which stipulate the conditions for giving this European Standard the status of a national standard without any alteration. Up-to-date lists and bibliographical references concerning such national standards may be obtained on application to the Management Centre or to any CEN member.

This European Standard exists in three official versions (English, French, German). A version in any other language made by translation under the responsibility of a CEN member into its own language and notified to the Management Centre has the same status as the official versions.

CEN members are the national standards bodies of Austria, Belgium, Czech Republic, Denmark, Finland, France, Germany, Greece, Hungary, Iceland, Ireland, Italy, Luxembourg, Malta, Netherlands, Norway, Portugal, Slovakia, Spain, Sweden, Switzerland and United Kingdom.

EUROPEAN COMMITTEE FOR STANDARDIZATION
COMITÉ EUROPÉEN DE NORMALISATION
EUROPÄISCHES KOMITEE FÜR NORMUNG

Management Centre: rue de Stassart, 36 B-1050 Brussels

Ref. No. EN 13763-8:2003 E

Contents

page

Foreword

This document (EN 13763-8:2003) has been prepared by Technical Committee CEN/TC 321 "Explosives for civil uses", the secretariat of which is held by AENOR.

This European Standard shall be given the status of a national standard, either by publication of an identical text or by endorsement, at the latest by May 2004, and conflicting national standards shall be withdrawn at the latest by May 2004.

This document has been prepared under a mandate given to CEN by the European Commission and the European Free Trade Association, and supports essential requirements of EU Directive(s).

For the relationship with EU Directive(s), see informative annex ZA, which is an integral part of this standard.

This European Standard is one of a series of standards with the generic title *Explosives for civil uses – Detonators and relays.* The other parts of this series are listed below:

prEN 13763-1 Part 1: Requirements

EN 13763-2 Part 2: Determination of thermal stability

EN 13763-3 Part 3: Determination of sensitiveness to impact

EN 13763-4 Part 4: Determination of resistance to abrasion of leading wires and shock tubes

EN 13763-5 Part 5: Determination of resistance to cutting damage of leading wires and shock tubes

EN 13763-6 Part 6: Determination of resistance to cracking at low temperatures of leading wires

EN 13763-7 Part 7: Determination of the mechanical strength of leading wires, shock tubes, connections, crimps and closures

EN 13763-9 Part 9: Determination of resistance to bending of detonators

EN 13763-11 Part 11: Determination of resistance to damage by dropping of detonators and relays

EN 13763-12 Part 12: Determination of resistance to hydrostatic pressure

prEN 13763-13 Part 13: Determination of resistance of electric detonators against electrostatic discharge

prEN 13763-15 Part 15: Determination of equivalent initiating capability

prEN 13763-16 Part 16: Determination of delay accuracy

prEN 13763-17 Part 17: Determination of no-fire current of electric detonators

prEN 13763-18 Part 18: Determination of series firing current of electric detonators

prEN 13763-19 Part 19: Determination of firing impulse of electric detonators

EN 13763-20 Part 20: Determination of total electrical resistance of electric detonators

prEN 13763-21 Part 21: Determination of flash-over voltage of electric detonators

prEN 13763-22 Part 22: Determination of capacitance, insulation resistance and insulation breakdown of leading wires

EN 13763-23 Part 23: Determination of the shockwave velocity of shock tubes

EN 13763-24 Part 24: Determination of the electrical non-conductivity of shock tubes

prEN 13763-25 Part 25: Determination of transfer capability of surface connectors and coupling accessories

prEN 13763-26 Part 26: Definitions, methods and requirements for devices and accessories for reliable and safe function of detonators and relays.

CEN/TS 13763-27 Part 27: Definitions, methods and requirements for electronic initiation systems

Annex A is informative.

According to the CEN/CENELEC Internal Regulations, the national standards organizations of the following countries are bound to implement this European Standard: Austria, Belgium, Czech Republic, Denmark, Finland, France, Germany, Greece, Hungary, Iceland, Ireland, Italy, Luxembourg, Malta, Netherlands, Norway, Portugal, Slovakia, Spain, Sweden, Switzerland and the United Kingdom.

Introduction

Detonators can be subjected to many forces, including vibration, during use and handling. This could cause material from the primary charge to become loose creating a risk of inadvertent initiation because of friction or other stimuli on the loose explosive.

1 Scope

This European Standard specifies a method for assessing the ability of the explosive content of plain detonators to withstand the vibration likely to be experienced in normal use and handling.

2 Normative references

This European Standard incorporates by dated or undated reference, provisions from other publications. These normative references are cited at the appropriate places in the text, and the publications are listed hereafter. For dated references, subsequent amendments to or revisions of any of these publications apply to this European Standard only when incorporated in it by amendment or revision. For undated references the latest edition of the publication referred to applies (including amendments).

EN 13857-1:2003; *Explosives for civil uses – Part 1: Terminology.*

EN 60068-2-6; *Environmental testing – Part 2: Tests – Test Fc: Vibration (sinusoidal) (IEC 60068-2-6:1995 + Corrigendum 1995).*

EN ISO/IEC 17025; *General requirements for the competence of testing and calibration laboratories. (ISO/IEC 17025:1999)*

3 Terms and definitions

For the purposes of this European Standard, the terms and definitions given in EN 13857-1:2003 apply.

4 Apparatus

4.1 Vibrating table, in accordance with EN 60068-2-6, with a horizontal vibrating plate and a vibrator (e.g. electromagnetic vibrator) designed, when unloaded, to produce at all points on its top surface vertical sinusoidal vibrations at a frequency of 50 Hz and of identical amplitude. An example of a vibrating table is shown in Figure 1.

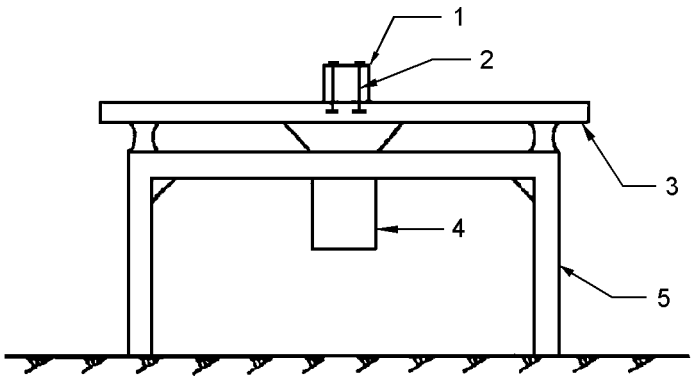

Key

1 Detonator holder

2 Detonator holder anchorage

3 Vibrating plate

4 Vibrator

5 Base

Figure 1 – Example of vibration table

4.2 Detonator holder made of metal and/or hard plastics, designed to be fixed securely in the centre of the vibrating plate and incorporating vertical detonator holder pockets of dimensions suitable for holding the detonator(s) under test. These pockets shall be capable of being closed by screw-in plugs, as shown in Figure 2.

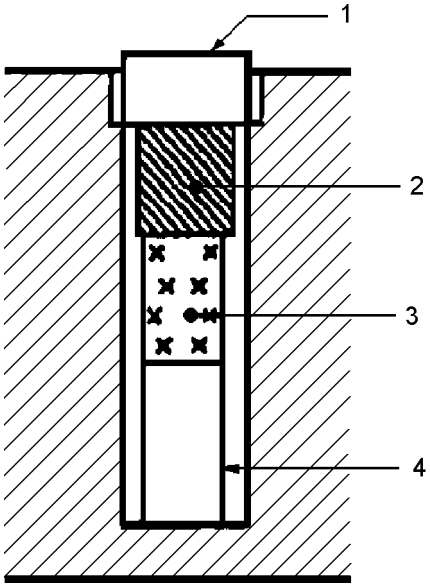

Key

1 Screw-in plug

2 Spacer

3 Detonator charge

4 Detonator shell

Figure 2 – Example of pocket in detonator holder

4.3 Spacers, a set of spacers of different heights to secure the detonators in place in the detonator holder pockets.

4.4 Weighing machine, capable of weighing to an accuracy of ± 1 mg.

5 Test pieces

Select 25 detonators of the same type, with the same design and composition of charge and the same loading configuration of charge.

6 Procedure

6.1 General

Condition the twenty-five detonators for 2 h at (20 ± 2) °C and relative humidity not greater than 50 % prior to testing.

The overall test run comprises 25 determinations as described below.

6.2 Weighing of the detonators

Weigh each detonator and record its mass m_0 in milligrams (mg).