SLOVENSKI STANDARD
SIST EN 12530:2000

01-december-2000

Castors and wheels - Castors and wheels for manually propelled institutional applications

Castors and wheels - Castors and wheels for manually propelled institutional applications

Räder und Rollen - Apparaterollen - Manuell betätigte Räder und Rollen

Roues et roulettes - Roues et roulettes pour équipements de collectivités manuels

Ta slovenski standard je istoveten z: EN 12530:1998

ICS:

21.180	Ohišja, okrovi, drugi strojni deli	Housings, enclosures, other machine parts
53.060	Industrijski tovornjaki	Industrial trucks

SIST EN 12530:2000 **en**

EUROPEAN STANDARD
NORME EUROPÉENNE
EUROPÄISCHE NORM

EN 12530

September 1998

ICS 21.180; 53.060

Descriptors: general product, wheels, castors, handling equipment, characteristics, product requirements, dimensions, tests, conformity tests, marking

English version

Castors and wheels - Castors and wheels for manually propelled institutional applications

Roues et roulettes - Roues and roulettes pour équipements de collectivités manuels

Räder und Rollen - Apparaterollen - Manuell betätigte Räder und Rollen

This European Standard was approved by CEN on 30 August 1998.

CEN members are bound to comply with the CEN/CENELEC Internal Regulations which stipulate the conditions for giving this European Standard the status of a national standard without any alteration. Up-to-date lists and bibliographical references concerning such national standards may be obtained on application to the Central Secretariat or to any CEN member.

This European Standard exists in three official versions (English, French, German). A version in any other language made by translation under the responsibility of a CEN member into its own language and notified to the Central Secretariat has the same status as the official versions.

CEN members are the national standards bodies of Austria, Belgium, Czech Republic, Denmark, Finland, France, Germany, Greece, Iceland, Ireland, Italy, Luxembourg, Netherlands, Norway, Portugal, Spain, Sweden, Switzerland and United Kingdom.

EUROPEAN COMMITTEE FOR STANDARDIZATION
COMITÉ EUROPÉEN DE NORMALISATION
EUROPÄISCHES KOMITEE FÜR NORMUNG

Central Secretariat: rue de Stassart, 36 B-1050 Brussels

Content

Foreword

This European Standard has been prepared by Technical Committee CEN/TC 324 "Castors and wheels", the secretariat of which is held by DIN.

This European Standard shall be given the status of a national standard, either by publication of an identical text or by endorsement, at the latest by March 1999, and conflicting national standards shall be withdrawn at the latest by March 1999

According to the CEN/CENELEC Internal Regulations, the national standards organizations of the following countries are bound to implement this European Standard: Austria, Belgium, Czech Republic, Denmark, Finland, France, Germany, Greece, Iceland, Ireland, Italy, Luxembourg, Netherlands, Norway, Portugal, Spain, Sweden, Switzerland and the United Kingdom.

1 Scope

This European Standard specifies the technical requirements, the appropriate dimensions and the requirements for testing.

This European Standard applies to castors and wheels which may include braking and/or locking devices, specifically for manually propelled use in an institutional environment. This includes for example, shops, restaurants, hotels, educational buildings and hospitals

2 Normative references

This European Standard incorporates by dated or undated reference, provisions from other publications. These normative references are cited at the appropriate places in the text and the publications are listed hereafter. For dated references, subsequent amendments to or revisions of any of these publications apply only to this European standard only when incorporated in it by amendment or revision. For undated references the latest edition of the publication referred to applies.

EN 12526 : 1998 Castors and wheels - Vocabulary, recommended symbols and multilingual dictionary

EN 12527 : 1998 Castors and wheels - Test methods and apparatus

3 Definitions

For the purpose of this European Standard, definitions and recommended symbols of EN 12526 : 1998 apply.

4 Dimensions and classification

The characteristics of a castor are:

- fixing system (4.1)
- offset (4.2)
- wheel (4.3)
- load capacity (4.4)

4.1 Fixing system

The fixing system includes top plate, solid stem and single bolt hole.

4.1.1 Top plate

Top plates are identified by classification and include rectangular and square plates with four fixing holes.

The design of the outer profile of the top plates is left to the manufacturer, provided that it is inscribed in a rectangle as provided in tables 1 and 2 by sizes A and B of figure 1 and A and A of figure 2 which is the max. acceptable size.

The holes may be oblong and form slots, provided the width of the slots is suitable for bolts of diameter (G_1) as in tables 1 and 2.

4.1.1.1 Rectangular top plates

Dimensions and classification of rectangular top plates are detailed in table 1 and illustrated in figure 1.

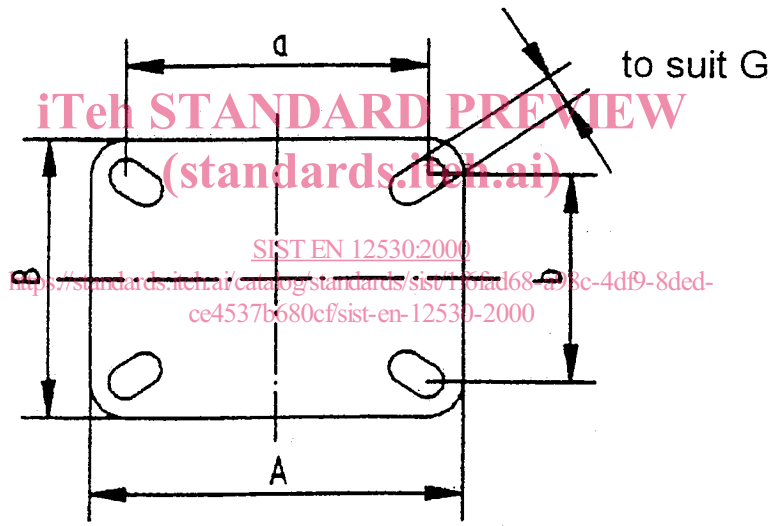

Figure 1: Rectangular top plate

Table 1: Rectangular top plates

dimensions in millimetres

Class	Maximum plate dimensions (A x B)	Bolt hole spacing (a x b)	Bolt diameter (G_1)	Corresponding wheel diameter (D)
R21	75x60	55x40	6	50 63 75/80 100
R22	90x70	60x50	8	75/80 100 125 150/160 200
R23	115x85	80x60	8	100 125 150/160 200

4.1.1.2 Square top plates

Dimensions and classification of square top plates are detailed in table 2 and illustrated in figure 2.

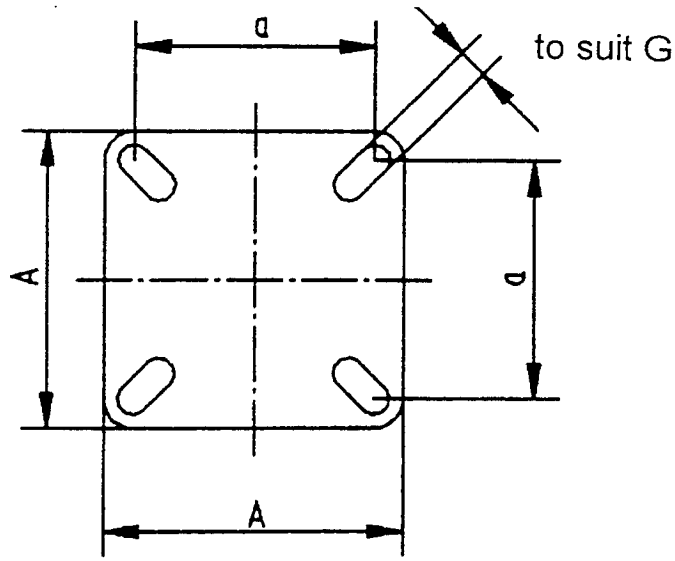

Figure 2: Square top plates

Table 2: Square top plates

dimensions in millimetres

Class	Maximum plate dimensions (A x A)	Bolt hole spacing (a x a)	Bolt diameter (G_1)	Corresponding wheel diameter (D)
S21	50x50	35x35	6	50 63 75/80
S22	65x65	45x45	6	50 63 75/80 100 125
S23	80x80	60x60	8	63 75/80 100 125 150/160 200
S24	100x100	80x80	8	75/80 100 125 150/160 200

4.1.2 Solid stem

Solid stem fittings are required to suit various tube sizes which have not been defined. The length of the solid stem shall be equal or greater than 1,5 times its diameter. In those cases where the solid stem is supplied with a cross hole for fixing to a tubular structure, the axis of

such hole shall be at 19 mm ± 0,25 mm from the collar of the stem and threaded M8 as illustrated in figure 3.

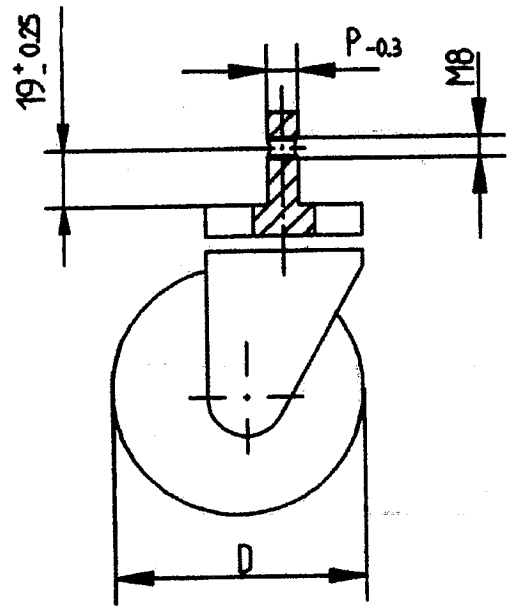

Figure 3: Solid stem castor with threaded fixing hole

4.1.3 Single bolt fixing

Table 3 specifies the bolt diameters (G_2) for single bolt fixing corresponding to the wheel diameter (D).

Table 3: Bolt diameters for single bolt fixing

dimensions in millimetres

Wheel diameter (D)	Bolt diameter (G_2)
50	8 10
63	8 10
75/80	8 10 12
100	8 10 12
125	8 10 12 16
150/160	12 16
200	12 16

4.2 Offset

Table 4 specifies the minimum and maximum offset values (F) for the swivel castors, corresponding to the wheel diameter (D), as in figure 4.

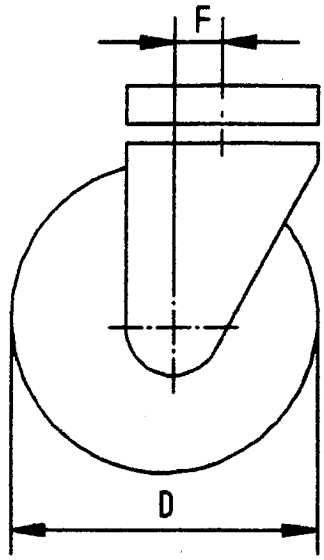

Figure 4: Offset

Table 4: Offset

dimensions in millimetres

Wheel diameter (D)	Offset (F)	
	Maximum	Minimum
50	30	20 % of the wheel diameter
63	40	
75	50	
80	50	
100	60	
125	70	
150	80	
160	85	
200	100	

4.3 Wheel

The characteristics of a wheel are:

- diameter (see table 5)
- hub width (see table 5)
- bore diameter (see table 5)
- load capacity (4.4)

The characteristics of the wheel are illustrated in figure 5 and the hub width (T_1) and bore diameter (d) corresponding to each wheel diameter (D) are listed in table 5. Wheels are not restricted to these hub widths and bores when used in castors.