IEC 62148-16

Edition 1.0 2009-08

INTERNATIONAL STANDARD

NORME INTERNATIONALE

Fiber optic active components and devices – Package and interface standards – Part 16: Transmitter and receiver components for use with the LC connector interface

iTeh STANDARD PREVIEW
(standards.iteh.ai)
IEC 62148-16:2009
https://standards.iteh.ai/catalog/standards/sist/5e25a83a-fe52-43d0-a424-4511f24ebdd3/iec-62148-16-2009



Composants et dispositifs actifs à fibres optiques – Normes de boitier et d'interface – Partie 16: Composants d'émetteurs et de récepteurs destinés à être utilisés avec l'interface des connecteurs LC

IEC 62148-16:2009

THIS PUBLICATION IS COPYRIGHT PROTECTED

Copyright © 2009 IEC, Geneva, Switzerland

All rights reserved. Unless otherwise specified, no part of this publication may be reproduced or utilized in any form or by any means, electronic or mechanical, including photocopying and microfilm, without permission in writing from either IEC or IEC's member National Committee in the country of the requester.
If you have any questions about IEC copyright or have an enquiry about obtaining additional rights to this publication, please contact the address below or your local IEC member National Committee for further information.

Droits de reproduction réservés. Sauf indication contraire, aucune partie de cette publication ne peut être reproduite ni utilisée sous quelque forme que ce soit et par aucun procédé, électronique ou mécanique, y compris la photocopie et les microfilms, sans l'accord écrit de la CEI ou du Comité national de la CEI du pays du demandeur.
Si vous avez des questions sur le copyright de la CEI ou si vous désirez obtenir des droits supplémentaires sur cette publication, utilisez les coordonnées ci-après ou contactez le Comité national de la CEI de votre pays de résidence.

IEC Central Office
3, rue de Varembé
CH-1211 Geneva 20
Switzerland
Email: inmail@iec.ch
Web: www.iec.ch

About the IEC

The International Electrotechnical Commission (IEC) is the leading global organization that prepares and publishes International Standards for all electrical, electronic and related technologies.

About IEC publications

The technical content of IEC publications is kept under constant review by the IEC. Please make sure that you have the latest edition, a corrigenda or an amendment might have been published.

- Catalogue of IEC publications: www.iec.ch/searchpub

The IEC on-line Catalogue enables you to search by a variety of criteria (reference number, text, technical committee,…). It also gives information on projects, withdrawn and replaced publications.

- IEC Just Published: www.iec.ch/online_news/justpub

Stay up to date on all new IEC publications. Just Published details twice a month all new publications released. Available on-line and also by email.

- Electropedia: www.electropedia.org

The world's leading online dictionary of electronic and electrical terms containing more than 20 000 terms and definitions in English and French, with equivalent terms in additional languages. Also known as the International Electrotechnical Vocabulary online.

- Customer Service Centre: www.iec.ch/webstore/custserv

If you wish to give us your feedback on this publication or need further assistance, please visit the Customer Service Centre FAQ or contact us:
Email: csc@iec.ch
Tel.: +41 22 919 02 11
Fax: +41 22 919 03 00

iTeh STANDARD PREVIEW
(standards.iteh.ai)
IEC 62148-16:2009
https://standards.iteh.ai/catalog/standards/sist/5e25a83a-fe52-43d0-a424-4511f24ebdd5/iec-62148-16-2009

A propos de la CEI

La Commission Electrotechnique Internationale (CEI) est la première organisation mondiale qui élabore et publie des normes internationales pour tout ce qui a trait à l'électricité, à l'électronique et aux technologies apparentées.

A propos des publications CEI

Le contenu technique des publications de la CEI est constamment revu. Veuillez vous assurer que vous possédez l'édition la plus récente, un corrigendum ou amendement peut avoir été publié.

- Catalogue des publications de la CEI: www.iec.ch/searchpub/cur_fut-f.htm

Le Catalogue en-ligne de la CEI vous permet d'effectuer des recherches en utilisant différents critères (numéro de référence, texte, comité d'études,…). Il donne aussi des informations sur les projets et les publications retirées ou remplacées.

- Just Published CEI: www.iec.ch/online_news/justpub

Restez informé sur les nouvelles publications de la CEI. Just Published détaille deux fois par mois les nouvelles publications parues. Disponible en-ligne et aussi par email.

- Electropedia: www.electropedia.org

Le premier dictionnaire en ligne au monde de termes électroniques et électriques. Il contient plus de 20 000 termes et définitions en anglais et en français, ainsi que les termes équivalents dans les langues additionnelles. Egalement appelé Vocabulaire Electrotechnique International en ligne.

- Service Clients: www.iec.ch/webstore/custserv/custserv_entry-f.htm

Si vous désirez nous donner des commentaires sur cette publication ou si vous avez des questions, visitez le FAQ du Service clients ou contactez-nous:
Email: csc@iec.ch
Tél.: +41 22 919 02 11
Fax: +41 22 919 03 00

IEC 62148-16

Edition 1.0 2009-08

INTERNATIONAL STANDARD

NORME INTERNATIONALE

Fiber optic active components and devices – Package and interface standards – Part 16: Transmitter and receiver components for use with the LC connector interface

iTeh STANDARD PREVIEW
(standards.iteh.ai)
IEC 62148-16:2009
https://standards.iteh.ai/catalog/standards/sist/5e25a85a-fe52-43d6-a424-4511f24ebdd3/iec-62148-16-2009

Composants et dispositifs actifs à fibres optiques – Normes de boitier et d'interface – Partie 16: Composants d'émetteurs et de récepteurs destinés à être utilisés avec l'interface des connecteurs LC

INTERNATIONAL ELECTROTECHNICAL COMMISSION

COMMISSION ELECTROTECHNIQUE INTERNATIONALE

PRICE CODE
CODE PRIX V

ICS 33.180.20

ISBN 978-2-88910-631-8

® Registered trademark of the International Electrotechnical Commission
Marque déposée de la Commission Electrotechnique Internationale

CONTENTS

FOREWORD 4
INTRODUCTION 6
1 Scope 7
2 Normative references 7
3 Terms, definitions and abbreviations 7
3.1 Terms and definitions 7
3.2 Abbreviations 7
4 Electromagnetic compatibility (EMC) requirements 8
5 Classification 8
6 Specification of transmitter component for use with LC connector interface without thermo-electric cooler 8
6.1 General 8
6.2 Electrical interface 8
6.2.1 General 8
6.2.2 Numbering of electrical terminals 8
6.2.3 Electrical terminals assignment 9
6.3 Outline and footprint 10
6.3.1 Drawing of package outline 10
6.3.2 Drawing of footprint 12
7 Specification of transmitter component for use with LC connector interface with thermo-electric cooler 13
7.1 General 13
7.2 Electrical interface 13
7.2.1 General 13
7.2.2 Numbering of electrical terminals 13
7.2.3 Electrical terminals assignment 14
7.3 Outline and footprint 16
7.3.1 Drawing of package outline 16
7.4 Drawing of footprint 18
8 Specification of receiver component for use with LC connector interface with PIN or avalanche photodiodes 19
8.1 General 19
8.2 Electrical interface 19
8.2.1 General 19
8.2.2 Electrical terminals assignment 20
8.3 Outline and footprint 22
8.3.1 Drawing of package outline 22
8.3.2 Drawing of footprint 24
9 Specification of receiver component for use with LC connector interface with avalanche photodiodes 25
9.1 General 25
9.2 Electrical Interface 25
9.2.1 General 25
9.2.2 Numbering of electrical terminals 25
9.2.3 Electrical terminal assignment 26
9.3 Outline and footprint 27

iTeh STANDARD PREVIEW
(standards.iteh.ai)
IEC 62148-16:2009
https://standards.iteh.ai/catalog/standards/sist/5e25a83a-fe52-43d0-a424-4511f24ebdd3/iec-62148-16-2009

9.3.1 Drawing of package outline 27
9.3.2 Drawing of footprint 29
Annex A (normative) Application to XFP transceivers 31
Bibliography 33

Figure 1 – Electrical terminal numbering assignments for transmitter component for use with LC connector interface without thermo-electric cooler 9
Figure 2 – Terminal function diagram 9
Figure 3 – Package outline drawing 10
Figure 4 – Recommended pattern layout for the PCB 12
Figure 5 – Electrical terminal numbering assignments 14
Figure 6 – Block diagram 14
Figure 7 – Package outline 16
Figure 8 – Recommended pattern layout for the PCB 18
Figure 9 – Electrical terminal numbering assignments 20
Figure 10 – Block diagram for option 1 20
Figure 11 – Block diagram for option 2 21
Figure 12 – Package outline 22
Figure 13 – Recommended pattern layout for the PCB 24
Figure 14 – Electrical terminal numbering assignments 26
Figure 15 – Block diagram 26
Figure 16 – Package outline 27
Figure 17 – Recommended pattern layout for the PCB 29
Figure A.1 – Recommended pattern layout for the PCB in an XFP transceiver 31
Figure A.2 – Recommended arrangement for the PCB in an XFP transceiver 32
Figure A.3 – Receptacle interface after jointing TOSA/ROSA for XFP transceiver 32

Table 1 – Terminal function definitions 10
Table 2 – Dimensions of the package outline 11
Table 3 – Dimensions of the recommended pattern layout for the PCB 13
Table 4 – Terminal function definitions 15
Table 5 – Dimensions of the package outline 17
Table 6 – Dimensions of the recommended pattern layout for the PCB 19
Table 7 – Terminal function definitions for option 1 21
Table 8 – Terminal function definitions for option 2 22
Table 9 – Dimensions of the package outline 23
Table 10 – Dimensions of the recommended pattern layout for the PCB 25
Table 11 – Terminal function definitions 26
Table 12 – Dimensions of the package outline 28
Table 13 – Dimensions of the recommended pattern layout for the PCB 30

iTeh STANDARD PREVIEW
(standards.iteh.ai)
IEC 62148-16:2009
https://standards.iteh.ai/catalog/standards/sist/5e25a83a-fe52-43d0-a424-4511f24ebdd3/iec-62148-16-2009

INTERNATIONAL ELECTROTECHNICAL COMMISSION

FIBER OPTIC ACTIVE COMPONENTS AND DEVICES – PACKAGE AND INTERFACE STANDARDS –

Part 16: Transmitter and receiver components for use with the LC connector interface

FOREWORD

1) The International Electrotechnical Commission (IEC) is a worldwide organization for standardization comprising all national electrotechnical committees (IEC National Committees). The object of IEC is to promote international co-operation on all questions concerning standardization in the electrical and electronic fields. To this end and in addition to other activities, IEC publishes International Standards, Technical Specifications, Technical Reports, Publicly Available Specifications (PAS) and Guides (hereafter referred to as "IEC Publication(s)"). Their preparation is entrusted to technical committees; any IEC National Committee interested in the subject dealt with may participate in this preparatory work. International, governmental and non-governmental organizations liaising with the IEC also participate in this preparation. IEC collaborates closely with the International Organization for Standardization (ISO) in accordance with conditions determined by agreement between the two organizations.
2) The formal decisions or agreements of IEC on technical matters express, as nearly as possible, an international consensus of opinion on the relevant subjects since each technical committee has representation from all interested IEC National Committees.
3) IEC Publications have the form of recommendations for international use and are accepted by IEC National Committees in that sense. While all reasonable efforts are made to ensure that the technical content of IEC Publications is accurate, IEC cannot be held responsible for the way in which they are used or for any misinterpretation by any end user.
4) In order to promote international uniformity, IEC National Committees undertake to apply IEC Publications transparently to the maximum extent possible in their national and regional publications. Any divergence between any IEC Publication and the corresponding national or regional publication shall be clearly indicated in the latter.
5) IEC provides no marking procedure to indicate its approval and cannot be rendered responsible for any equipment declared to be in conformity with an IEC Publication.
6) All users should ensure that they have the latest edition of this publication.
7) No liability shall attach to IEC or its directors, employees, servants or agents including individual experts and members of its technical committees and IEC National Committees for any personal injury, property damage or other damage of any nature whatsoever, whether direct or indirect, or for costs (including legal fees) and expenses arising out of the publication, use of, or reliance upon, this IEC Publication or any other IEC Publications.
8) Attention is drawn to the Normative references cited in this publication. Use of the referenced publications is indispensable for the correct application of this publication.
9) Attention is drawn to the possibility that some of the elements of this IEC Publication may be the subject of patent rights. IEC shall not be held responsible for identifying any or all such patent rights.

iTeh STANDARD PREVIEW
(standards.iteh.ai)
IEC 62148-16:2009
https://standards.iteh.ai/catalog/standards/sist/9e25a85a-fe52-45d6-a424-4511f24ebdd3/iec-62148-16-2009

International standard IEC 62148-16 has been prepared by subcommittee 86C: Fibre optic systems and active devices, of IEC technical committee 86: Fibre optics.

This standard is to be read in conjunction with IEC 62148-1.

The text of this standard is based on the following documents:

FDIS	Report on voting
86C/884/FDIS	86C/904/RVD

Full information on the voting for the approval of this standard can be found in the report on voting indicated in the above table.

This publication has been drafted in accordance with the ISO/IEC Directives, Part 2.

A list of all parts of the IEC 62148 series, published under the general title *Fibre optic active components and devices – Package and interface standards*, can be found on the IEC website.

The committee has decided that the contents of this publication will remain unchanged until the maintenance result date indicated on the IEC web site under "http://webstore.iec.ch" in the data related to the specific publication. At this date, the publication will be

- reconfirmed,
- withdrawn,
- replaced by a revised edition,
- or amended.

iTeh STANDARD PREVIEW
(standards.iteh.ai)
IEC 62148-16:2009
https://standards.iteh.ai/catalog/standards/sist/5e25a83a-fe52-43d0-a424-4511f24ebdd3/iec-62148-16-2009

INTRODUCTION

Compact optical sub-assembly (OSA) modules for 10 Gbit/s are used to convert electrical signals into optical signals and vice-versa. This standard covers the physical interface for 10-Gbit/s compact OSA modules. These modules are designed for use with the LC fibre optic connector specified in IEC 61754-20, and are intended to be applied to XFP modules.

iTeh STANDARD PREVIEW
(standards.iteh.ai)
IEC 62148-16:2009
https://standards.iteh.ai/catalog/standards/sist/5e25a83a-fe52-43d0-a424-4511f24ebdd3/iec-62148-16-2009

FIBER OPTIC ACTIVE COMPONENTS AND DEVICES – PACKAGE AND INTERFACE STANDARDS –

Part 16: Transmitter and receiver components for use with the LC connector interface

1 Scope

This part of IEC 62148 covers physical interface specification of transmitter and receiver components for use with LC connector interface.

The intent of this part of IEC 62148 is to adequately specify the physical requirements of an optical transmitter and receiver that will enable mechanical interchangeability of transmitters and receivers complying with this standard both at the PCB and for any panel-mounting requirement.

2 Normative references

The following referenced documents are indispensable for the application of this document. For dated references, only the edition cited applies. For undated references, the latest edition of the referenced document (including any amendments) applies.

iTeh STANDARD PREVIEW
(standards.iteh.ai)

IEC 61754-20:2002, *Fibre optic connector interfaces – Part 20: Type LC connector family*

IEC 62148-16:2009
https://standards.iteh.ai/catalog/standards/sist/5e25a83e-fc52-42d0-ad24-4511f24ebdd3/iec-62148-16-2009

IEC 62148-1: *Fiber optic active components and devices – Package and interface standards – Part 1: General and guidance*

IEC Guide 107: 1998, *Electromagnetic compatibility – Guide to the drafting of electromagnetic compatibility publications*

3 Terms, definitions and abbreviations

For the purposes of this document, the following terms, definitions and abbreviations apply.

3.1 Terms and definitions

3.1.1
TOSA module
an optical module that converts electrical signals into optical signals and that is connected to an optical fibre

3.1.2
ROSA module
an optical module that converts optical signals into electrical signals and that is connected to an optical fibre

3.2 Abbreviations

FPC	flexible printed circuit
LD	laser diode
OSA	optical sub-assembly
PCB	printed circuit board

PD	photo diode
ROSA	receiver optical sub-assembly
TOSA	transmitter optical sub-assembly
XFP	10-Gbit/s small form factor pluggable module
TEC	thermo electric cooler
PIN PD	photo diode with PIN structure
TIA	trans-impedance amplifier
APD	avalanche photo diode

4 Electromagnetic compatibility (EMC) requirements

The components specified by the present standard shall comply with suitable requirements for electromagnetic compatibility (in terms of both, emission and immunity), depending on particular usage/environment in which they are intended to be installed or integrated. Guidance to the drafting of such EMC requirements is provided in IEC Guide 107. Guidance for electrostatic discharge (ESD) is still under study.

5 Classification

The transmitter component for use with LC connector described in this standard is classified as type 1 according to the definitions of IEC 62148-1.

iTeh STANDARD PREVIEW
(standards.iteh.ai)

6 Specification of transmitter component for use with LC connector interface without thermo-electric cooler

IEC 62148-16:2009
https://standards.iteh.ai/catalog/standards/sist/5e25a83a-fe52-43d0-a424-4511f24ebdd3/iec-62148-16-2009

6.1 General

The intent of this standard is to adequately specify the physical requirements of a TOSA module that will enable mechanical interchangeability of modules complying with this specification both for the PCB and for any panel mounting requirement.

6.2 Electrical interface

6.2.1 General

The electrical interface in this specification defines only the basic functionality of each pin.

6.2.2 Numbering of electrical terminals

Pin numbering assignments are shown in Figure 1.

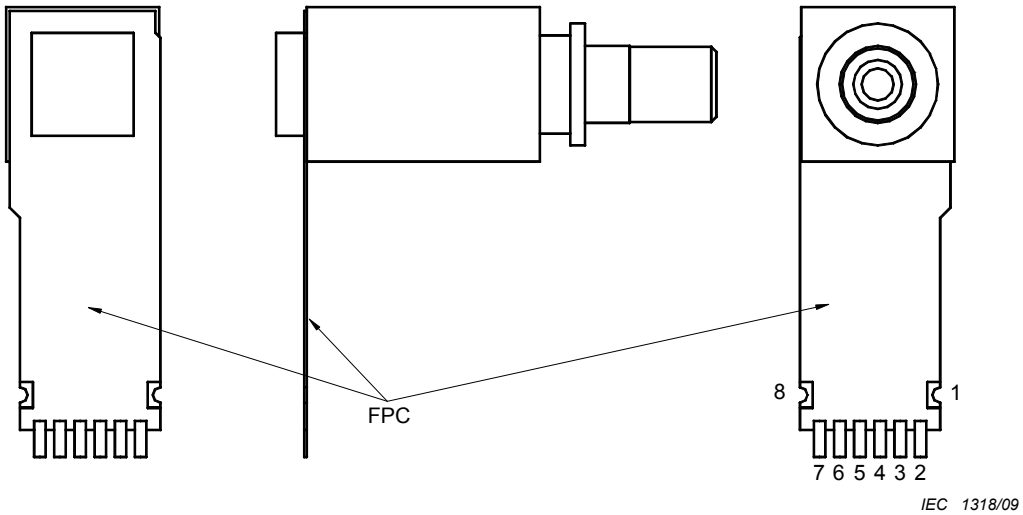

Figure 1 – Electrical terminal numbering assignments for transmitter component for use with LC connector interface without thermo-electric cooler

6.2.3 Electrical terminals assignment

iTeh STANDARD PREVIEW
(standards.iteh.ai)
IEC 62148-16:2009
https://standards.iteh.ai/catalog/standards/sist/5e25a83a-fe52-43d0-a424-4511f24ebdd3/iec-62148-16-2009

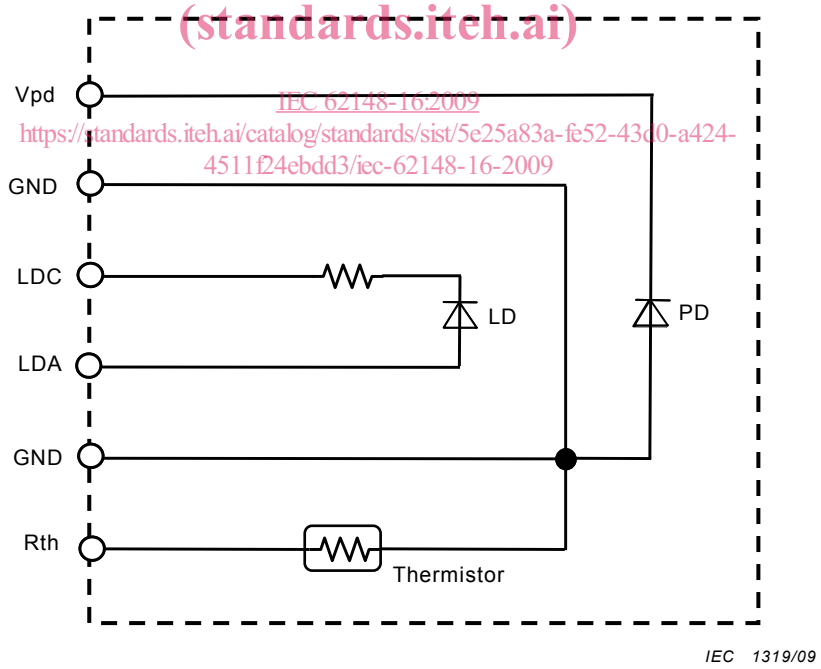

NOTE The dashed line denotes just an electrical interface of the transmitter component and does not mean electrical connection.

Figure 2 – Terminal function diagram

Table 1 – Terminal function definitions

Terminal number	Symbol	Function
1	GND	Signal ground
2	Vpd	PD cathode
3	GND	Signal ground
4	LDC	LD cathode
5	LDA	LD anode
6	GND	Signal ground
7	RTH	Thermistor
8	GND	Signal ground

NOTE Package potential should be specified by each vendor.

6.3 Outline and footprint

6.3.1 Drawing of package outline

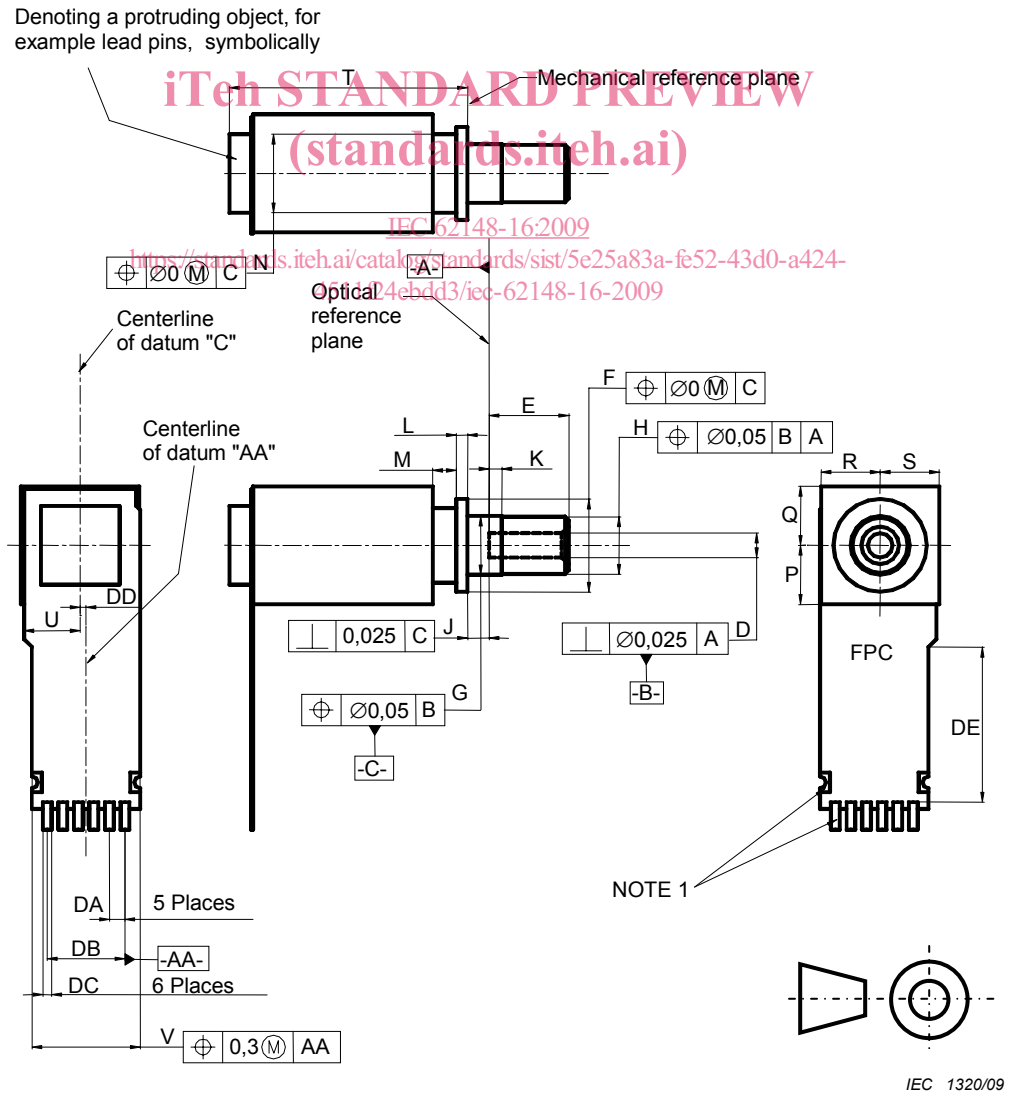

iTeh STANDARD PREVIEW
(standards.iteh.ai)
IEC 62148-16:2009
https://standards.iteh.ai/catalog/standards/sist/5e25a83a-fe52-43d0-a424-65ca24ebdd3/iec-62148-16-2009

Figure 3 – Package outline drawing

NOTE 1 Denoting 8 soldering pads corresponding to the terminals described in Figure 1 and Table 1. Features and dimensions of the pads and the FPC end portion shape around the pads should be specified by each vendor to comply with the recommended pattern layout described in Figure 4. The features of the pads and the FPC end portion shape described in this figure are prepared as examples only.

NOTE 2 The vendor should design the FPC by considering electrical crosstalk and mechanical stress.

Table 2 – Dimensions of the package outline

Reference	Dimensions mm		Notes
	Minimum	Maximum	
D	-	-	Note 1
E	4,0	4,1	
F	4,7	5,1	Diameter
G	2,98	3,00	Diameter
H	-	2,97	Diameter
J	1,065	1,135	
K	0,55	0,70	
L	0,52	0,63	
M	1,0	-	
N	-	4,1	Diameter
P	-	3	Note 2
Q	-	3	Note 2
R	-	3	Note 2
S	-	3	Note 2
T	-	13,8	
U	-	3	
V	-	5,7	
DA	0,79		Basic dimension
DB	3,95		Reference dimension
DC	-	-	Note 3
DD	0,05	0,55	Note 4
DE	2,5	-	

NOTE 1 Refer IEC 61754-20.

NOTE 2 P, Q, R and S only define the maximum dimension, thus do not specify the shape of the package.

NOTE 3 The dimension and the positional tolerance of “DC” should be specified by each vendor considering the pattern layout described in Figure 3.

NOTE 4 Denoting the dimension from the centreline of the datum “C” to the centreline of the datum “AA”.

iTeh STANDARD PREVIEW
(standards.iteh.ai)
IEC 62148-16:2009
https://standards.iteh.ai/catalog/standards/sist/5e25a83a-fe52-43d0-a424-4511f24ebdd3/iec-62148-16-2009

6.3.2 Drawing of footprint

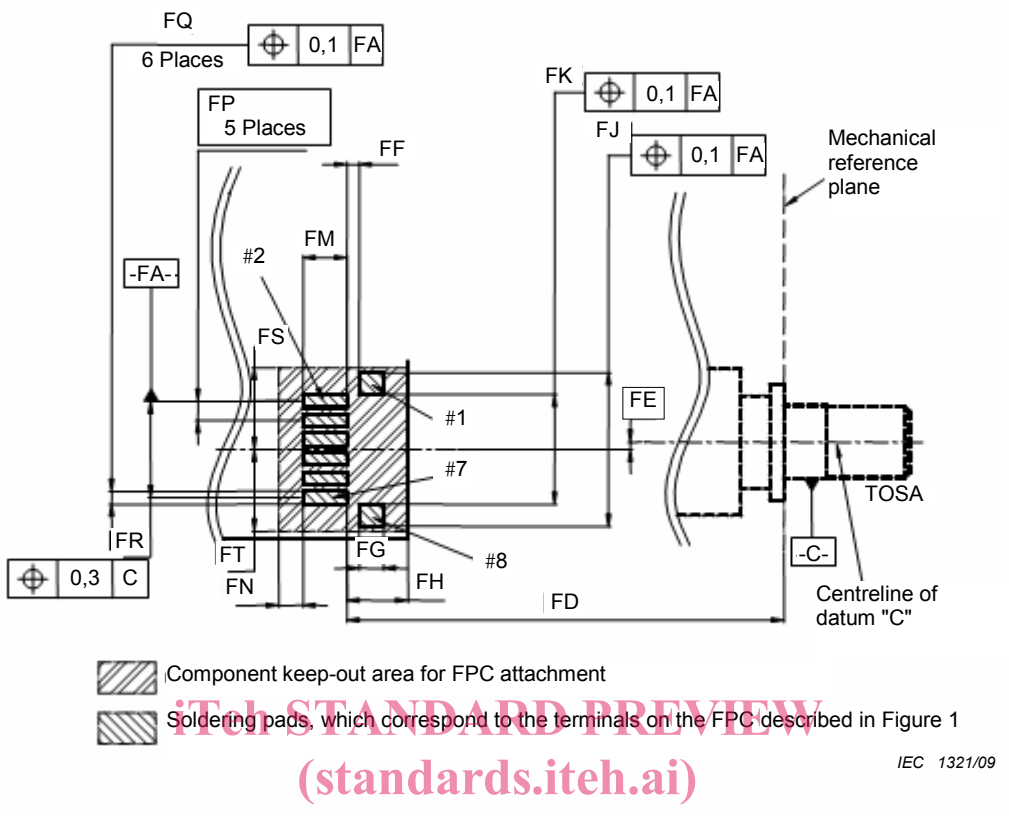

iTeh STANDARD PREVIEW
(standards.iteh.ai)

IEC 62148-16:2009
https://standards.iteh.ai/catalog/standards/sist/5e25a83a-fe52-43d0-a424-4511f24ebdd3/iec-62148-16-2009

NOTE 1 The datum “C” described here is the same as the one described in Figure 3.

NOTE 2 #1, #2, #7 and #8 in this figure denote pad numbers corresponding to the terminal numbers described in Figure 1 and Table 1.

Figure 4 – Recommended pattern layout for the PCB

Table 3 – Dimensions of the recommended pattern layout for the PCB

Reference	Dimensions mm		Notes
	Minimum	Maximum	
FD	18,5	19,2	
FE	0,3		Basic dimension, Note 1
FF	0,50	0,55	
FG	1,0	1,1	
FH	-	2,5	
FJ	6,10	6,35	
FK	4,45	4,55	
FM	1,4	-	
FN	1,0	-	
FP	0,79		Basic dimension
FQ	0,45	0,50	
FR	3,95		Reference dimension
FS	3,35	-	Note 2
FT	3,35	-	Note 2

NOTE 1 Denoting the offset between the datum "C" and the datum "FA".

NOTE 2 Denoting the dimension from the datum "FA".

iTeh STANDARD PREVIEW
(standards.iteh.ai)
IEC 62148-16:2009
https://standards.iteh.ai/catalog/standards/sist/5e25a83a-f52-42d0-a424-4511f24ebdd3/iec-62148-16-2009

7 Specification of transmitter component for use with LC connector interface with thermo-electric cooler

7.1 General

The intent of this standard is to adequately specify the physical requirements of a TOSA module that will enable mechanical interchangeability of modules complying with this specification both for the PCB and for any panel-mounting requirement.

7.2 Electrical interface

7.2.1 General

The electrical interface in this specification defines only the basic functionality of each pin.

7.2.2 Numbering of electrical terminals

Pin numbering assignments are shown in Figure 5.