SLOVENSKI STANDARD
SIST EN 2287:2001

01-januar-2001

Aerospace series - Bushes, plain corrosion resisting steel with self-lubricating liner - Dimensions and loads

Aerospace series - Bushes, plain corrosion resisting steel with self-lubricating liner - Dimensions and loads

Luft- und Raumfahrt - Buchsen ohne Flansch aus korrosionsbeständigem Stahl mit selbstschmierender Beschichtung - Maße und Belastungen

Série aérospatiale - Bagues cylindriques en acier résistant a la corrosion a garniture autolubrifiante - Dimensions et charges

Ta slovenski standard je istoveten z: EN 2287:1989

ICS:

49.030.99 Drugi vezni elementi Other fasteners

SIST EN 2287:2001 en

EUROPEAN STANDARD

NORME EUROPÉENNE

EUROPÄISCHE NORM

EN 2287

December 1989

UDC : 629.7.02+05:621.887-408.2-72.004.1:669.14.018.89

Key words : Aeronautical industry, bush, corrosion resisting steel, liner, self-lubricating piece, dimension.

English version

Aerospace series
Bushes, plain
corrosion resisting steel
with self-lubricating liner
Dimensions and loads

Série aérospatiale
Bagues cylindriques
en acier résistant à la corrosion
à garniture autolubrifiante
Dimensions et charges

Luft- und Raumfahrt
Buchsen ohne Flansch
aus korrosionsbeständigem Stahl
mit selbstschmierender Beschichtung
Maße und Belastungen

This European Standard was accepted by CEN on 1988-11-03. CEN members are bound to comply with the requirements of CEN Internal Regulations which stipulate the conditions for giving this European Standard the status of a national standard without any alteration.

Up-to-date lists and bibliographical references concerning such national standards may be obtained on application to the CEN Central Secretariat or to any CEN member.

This European Standard exists in three official versions (English, French, German). A version in any other language made by translation under the responsibility of a CEN member into its own language and notified to CEN Central Secretariat has the same status as the official versions.

CEN members are the national standards organizations of Austria, Belgium, Denmark, Finland, France, Germany, Greece, Iceland, Ireland, Italy, Luxemburg, Netherlands, Norway, Portugal, Spain, Sweden, Switzerland and United Kingdom.

CEN

European Committee for Standardization
Comité Européen de Normalisation
Europäisches Komitee für Normung

Central Secretariat : Rue Bréderode 2, B—1000 Bruxelles

Brief history

This European Standard has been prepared by the European Association of Aerospace Manufacturers (AECMA).

After inquiries and votes carried out in accordance with the rules of this Association, this Standard has successively received the approval of the National Associations and the Official Services of the member countries of AECMA, prior to its presentation to CEN.

According to the Common CEN/CENELEC Rules, the following countries are bound to implement this European Standard : Austria, Belgium, Denmark, Finland, France, Germany, Greece, Iceland, Ireland, Italy, Luxemburg, Netherlands, Norway, Portugal, Spain, Sweden, Switzerland and United Kingdom.

1 Scope

This standard specifies the characteristics of plain bushes in corrosion resisting steel with self-lubricating liner and the design recommendation of shafts and housings.

2 Field of application

The bushes are intended for operation within the temperature range of -55 °C to +150 °C and assembly with an interference fit into fixed and moving aerospace parts.

3 References

EN 2136, Steel FE-PM42 - 900 MPa $\leq R_m \leq$ 1100 MPa - Bars $D_e \leq$ 100 mm - Aerospace series 1)

EN 2311, Aerospace series - Bushes with self lubricating liners - Technical specification

EN 2539, Aerospace series - Steel FE-PM61 - Solution annealed and precipitation hardened - $R_m \geq$ 960 MPa - Bar $D_e \leq$ 120 mm 2)

4 Required characteristics

4.1 Configuration - Dimensions - Tolerances - Masses

Configuration : see figure 1.

Dimensions, tolerances and masses : see figure 1 and table 1.

4.2 Surface roughness

See figure 1.

4.3 Materials

Bush : Steel EN 2136 or EN 2539

Liner : Self-lubricating wear resistant material consistent with the requirements of EN 2311.

---

1) Published as AECMA standard.
2) Published as AECMA pre-standard.

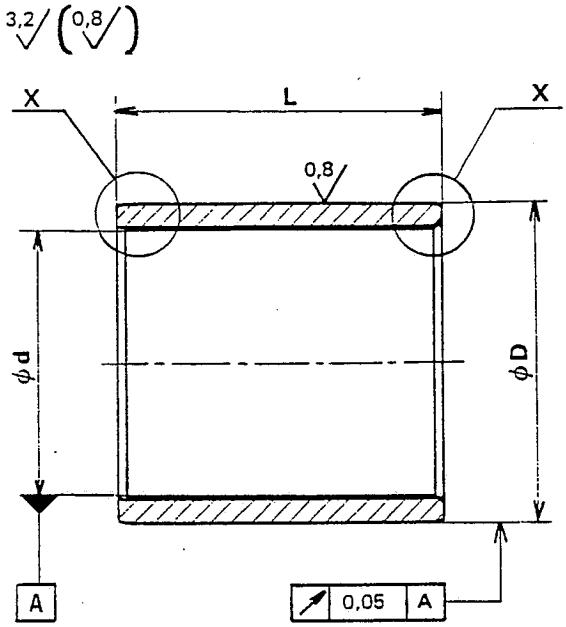

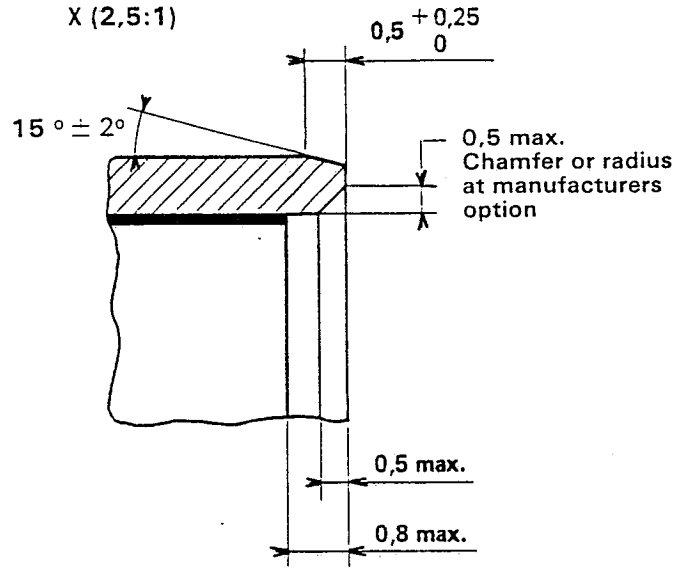

Figure 1

Table 1

Dimensions in millimetres

d		D		L ± 0,1 / ± 0,4																	
Nom	Tol. µm	Nom	Tol. µm	6	8	10	12	15	16	18	20	22	25	28	30	32	35	40	45	50	
				Mass en kg/1000 pieces ≈																	
6	+ 22 / + 4	10	+ 24 / + 15	2,4*																	
8	+ 27 / + 5	12	+ 29 / + 18	3,0	4,0*																
10		14		3,5	4,7	5,9*															
12	+ 33 / + 6	16		4,1	5,5*	6,9	8,3*														
15		19	+ 35 / + 22		6,7	8,4*	10,1	12,6*													
16		20			7,1	8,9	10,7	13,4	14,3												
18		22				9,9	11,8	14,8		17,8											
20	+ 40 / + 7	25				13,9	16,7*	20,9			27,8*										
22		26					14,2	17,8*			23,7	26,1*									
25		30					20,4	25,5*			34,0	37,4	42,5*								
28		34	+ 42 / + 26					34,5			46,0	50,6	57,5	64,4							
30		36						36,7			49,0*	53,8	61,2		73,4*						
32	+ 48 / + 9	38						39,0			51,9	57,1	64,9		77,9	83,1					
35		42									66,6*	73,5	83,6		100,3		117,0*				
40		48									87,0		108,8		130,0*		152,2	174,0*			
45		52	+ 51 / + 32										105,0		126,0		147,0*	168,0	189,0*		
50		58											133,5		160,2		186,9	214,0*	240,3	267,0*	

Only bushes whose masses lie within the bold lines are standard.
*The recommended sizes are indicated by *.*

Table 2

d mm	L mm	Permissible radial load Static Cs 1) kN	Permissible radial load Dynamic C_{25} 2) kN	d mm	L mm	Permissible radial load Static Cs 1) kN	Permissible radial load Dynamic C_{25} 2) kN	d mm	L mm	Permissible radial load Static Cs 1) kN	Permissible radial load Dynamic C_{25} 2) kN
6	6	10,3	4,1	20	15	11,8	44,7	32	30	385,3	153,8
8	6	13,8	5,5		20	154,8	61,8		32	412,8	165,1
	8	20,6	8,3	22	12	94,6	37,7	35	20	270,9	108,2
10	6	17,2	6,8		15	123,0	49,1		22	301,0	120,2
	8	25,8	10,3		20	170,3	68,0		25	346,0	138,2
	10	34,4	13,8		22	189,2	75,5		30	421,4	168,3
12	6	20,6	8,3	25	12	107,5	42,9		35	496,7	198,3
	8	31,0	12,3		15	139,8	55,8	40	20	309,6	123,6
	10	41,3	16,5		20	193,5	77,3		25	395,6	157,9
	12	51,6	20,6		22	215,0	85,8		30	481,6	192,3
15	8	38,7	15,4		25	247,3	98,8		35	567,6	226,6
	10	51,6	20,6		15	156,5	62,5		40	653,6	260,9
	12	64,5	25,8	28	20	216,7	86,5	45	25	445,1	177,7
	15	83,9	33,5		22	240,8	96,2		30	541,8	216,3
16	8	41,3	16,5		25	276,9	110,6		35	638,6	254,9
	10	55,0	22,0		28	313,0	125,2		40	735,3	293,6
	12	68,8	27,5	30	15	167,7	69,6		45	832,1	332,1
	15	89,4	35,7		20	232,2	92,7	50	25	494,5	197,4
	16	96,3	38,4		22	258,0	103,0		30	602,0	240,3
18	10	61,9	24,8		25	296,7	118,4		35	709,5	283,3
	12	77,4	30,9		30	361,2	144,2		40	817,0	326,2
	15	100,6	40,2	32	15	178,9	71,4		45	924,5	369,1
	18	123,8	49,4		20	247,7	98,9		50	1032,0	412,0
20	10	68,8	27,5		22	275,2	109,8				
	12	86,0	34,3		25	275,2	126,3				

1) Cs = 0,43d (L − 2) kN.
2) Definitions for C_{25} and ultimate static loads, see EN 2311

5 Designation

Each bush shall only be designated as in the following example :

Description block	Identity block
BUSH	EN2287-1208

Number of EN standard
12 = diameter d in mm (see table 1)
08 = length L in mm (see table 1)

Notes :

1 The number of characters is constant, zero (0) is inserted at the left of the figure when the diameter d or length L is less than 10.

2 If necessary the originators code I9005 may be introduced between the description block and the identity block.

6 Marking

In addition to the manufacturer's own marking each bush and its package shall be marked with the identity block specified in clause 5 of this standard.

Marking position and method are at manufacturer's option, and shall not have any detrimental effect on the bush.

7 Technical specification

Bushes supplied to this standard shall conform with the requirements of technical specification EN 2311.

The loads given in table 2 of this standard are only applicable under the conditions given in EN 2311.

8 Design recommendation

Bushes defined by this standard are intended to be installed by interference fit methods (see figure 2). Therefore, the loads given in table 2 can only be insured if the following mounting is applied.

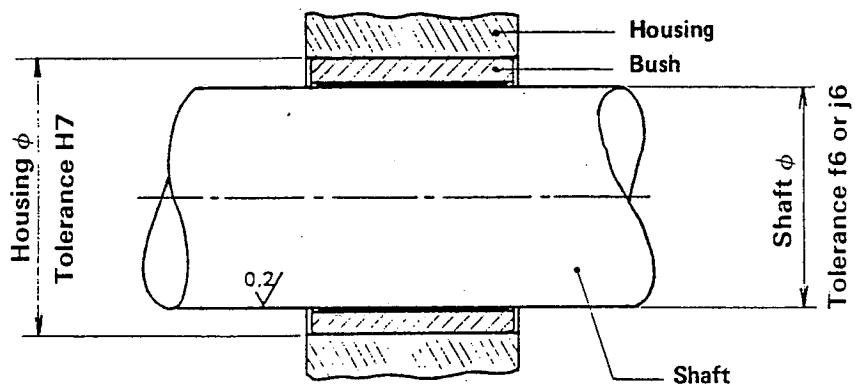

Figure 2

Hardness of the shaft : 45 HRC Surface roughness of the shaft : See figure 2

The reduction in bore diameter d (see figure 1) due to interference fit of the bush in the housing has been taken into account when selecting tolerances for the shaft : f6 (clearance fit) or j6 (transition fit).