SLOVENSKI STANDARD
SIST EN 2364:2001

01-januar-2001

Aerospace series - Pins, shear, headed, close tolerance

Aerospace series - Pins, shear, headed, close tolerance

Luft- und Raumfahrt - Paßbolzen mit Kopf

Série aérospatiale - Axes lisses a tete et a tolérances serrées

Ta slovenski standard je istoveten z: EN 2364:1989

ICS:

49.030.40 Zatiči, žeblji Pins, nails

SIST EN 2364:2001 en

EUROPEAN STANDARD
NORME EUROPÉENNE
EUROPÄISCHE NORM

EN 2364

March 1989

UDC : 621.882.6-034.14 : 629.7

Key words : Aircraft industry - Pins - Tolerance - Specifications - Designation - Dimensions

English version

Aerospace series
Pins, shear, headed, close tolerance

Série aérospatiale
Axes lisses
à tête et à tolérances serrées

Luft- und Raumfahrt
Paßbolzen
mit Kopf

This European Standard was accepted by CEN on 1988-05-26. CEN members are bound to comply with the requirements of CEN Internal Regulations which stipulate the conditions for giving this European Standard the status of a national standard without any alteration.

Up-to-date lists and bibliographical references concerning such national standards may be obtained on application to the CEN Central Secretariat or to any CEN member.

This European Standard exists in three official versions (English, French, German). A version in any other language made by translation under the responsibility of a CEN member into its own language and notified to CEN Central Secretariat has the same status as the official versions.

CEN members are the national standards organizations of Austria, Belgium, Denmark, Finland, France, Germany, Greece, Iceland, Ireland, Italy, Luxemburg, Netherlands, Norway, Portugal, Spain, Sweden, Switzerland and United Kingdom.

CEN

European Committee for Standardization
Comité Européen de Normalisation
Europäisches Komitee für Normung

Central Secretariat : Rue Bréderode 2, B—1000 Bruxelles

Brief history

This European Standard has been prepared by the European Association of Aerospace Manufacturers (AECMA).

After enquiries and votes carried out in accordance with the rules of this Association, this Standard has successively received the approval of the National Associations and the Official Services of the member countries of AECMA, prior to its presentation to CEN.

According to the Common CEN/CENELEC Rules, following countries are bound to implement this European Standard : Austria, Belgium, Denmark, Finland, France, Germany, Greece, Iceland, Ireland, Italy, Luxemburg, Netherlands, Norway, Portugal, Spain, Sweden, Switzerland and the United Kingdom.

1 Scope and field of application

This standard specifies the characteristics of close tolerance headed shear pins in steel : cadmium plated, for use in aerospace at temperatures below 235 °C.

These shear pins are intended for use as a connecting part in conjunction with collars EN 2365 and split pins EN 2367.

2 References

EN 2133, Cadmium plating of steels with maximum specified tensile strength equal to or less than 1450 MPa, and copper and copper alloys Aerospace series

EN 2236, Aerospace series - Pins, shear, headed, close tolerance - Technical specification 1)

EN 2365, Aerospace series - Collars, aluminium alloy

EN 2367, Aerospace series - Split pins in steel EN 2573

EN 2424, Aerospace series - Identification marking of standard fasteners

EN 2450, Steel FE-PL73 - 1230 MPa $\leq R_m \leq$ 1420 MPa - Bars $D_e \leq$ 40mm Aerospace series

EN 2451, Steel FE-PL73 - 1230 MPa $\leq R_m \leq$ 1420 MPa - Forgings $D_e \leq$ 40mm Aerospace series

3 Required characteristics

3.1 Configuration - Dimensions - Tolerances

Configuration shall correspond with the figure. Dimensions and tolerances shall correspond with the figure and tables 1 and 2.
These values apply after cadmium plating.

3.2 Surface roughness

R_a = 3,2 µm except where stated otherwise.
These values apply prior to cadmium plating.

3.3 Material

Steel EN 2450 ou EN 2451

3.4 Surface treatment

Cadmium plating EN 2133, 7 to 10 µm

---

1) In preparation

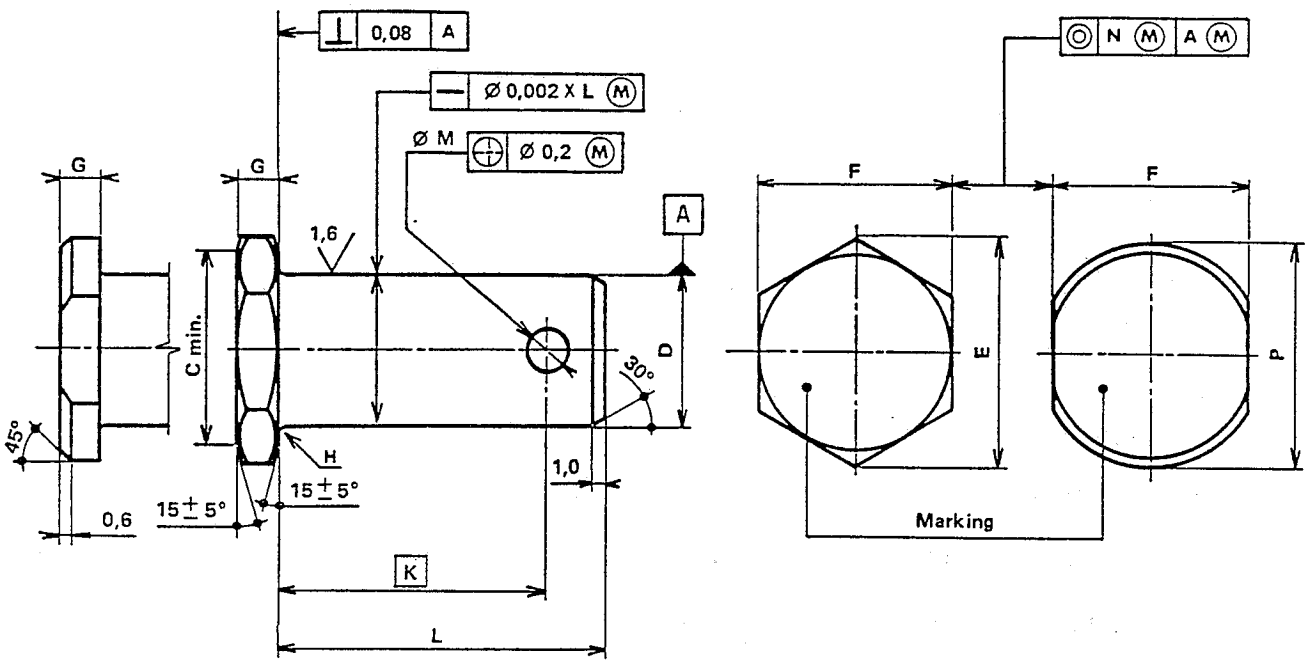

C min. = F min. – 0,4

Break sharp edges 0,1 to 0,4 mm

Figure - Configuration

Table 1 - Dimensions

Dimensions in millimetres

Diameter code	D max.	D min.	E min.	F max.	F min.	G max.	G min.	H max.	H min.	M H13	N	P h11
030	2,99	2,965	5,3	5	4,88	1,8	1,6	0,3	0,2	1,1	0,15	6
040	3,99	3,965	6,5	6	5,88	2	1,8	0,3	0,2	1,5	0,2	7
050	4,99	4,965	7,6	7	6,85	2,2	2	0,3	0,2	1,9	0,25	8
060	5,99	5,965	8,7	8	7,85	2,2	2	0,3	0,2	1,9	0,3	9
070	6,987	6,962	10,9	10	9,78	2,5	2,2	0,5	0,4	2,4	0,35	11
080	7,987	7,962	12	11	10,73	2,8	2,5	0,5	0,4	2,4	0,4	12
100	9,987	9,962	14,3	13	12,73	2,8	2,5	0,5	0,4	3	0,5	13

Table 2 - Lengths and masses (kg/1000 pieces)

Dimensions in millimetres

Length		Diameter code													
		030		040		050		060		070		080		100	
Code	L $^{+0,25}_{0}$	K	Mass	K	Mass	K	Mass	K	Mass	K	Mass	K	Mass	K	Mass
007	7,0	3,85	0,67	–	–	–		–	–	–	–	–	–	–	–
008	8,0	4,85	0,72	4,6	1,24	–		–	–	–	–	–	–	–	–
009	9,0	5,85	0,78	5,6	1,34	–		–	–	–	–	–	–	–	–
010	10,0	6,85	0,83	6,6	1,43	6,35	2,22	–	–	–	–	–	–	–	–
012	12,0	8,85	0,94	8,6	1,63	8,35	2,53	8,35	3,55	–	–	–	–	–	–
014	14,0	10,85	1,05	10,6	1,82	10,35	2,84	10,35	3,99	–	–	–	–	–	–
016	16,0	12,85	1,16	12,6	2,02	12,35	3,14	12,35	4,43	12,1	6,37	12,1	8,41	–	–
018	18,0	14,85	1,27	14,6	2,21	14,35	3,45	14,35	4,88	14,1	6,97	14,1	9,19	–	–
020	20,0	16,85	1,38	16,6	2,41	16,35	3,75	16,35	5,32	16,1	7,57	16,1	9,98	–	–
022	22,0	18,85	1,49	18,6	2,60	18,35	4,06	18,35	5,76	18,1	8,17	18,1	10,76	17,85	16,48
025	25,0	21,85	1,65	21,6	2,90	21,35	4,52	21,35	6,42	21,1	9,07	21,1	11,94	20,85	18,33
030	30,0	26,85	1,92	26,6	3,39	26,35	5,28	26,35	7,52	26,1	10,57	26,1	13,90	25,85	21,40
035	35,0	31,85	2,20	31,6	3,87	31,35	6,04	31,35	8,62	31,1	12,07	31,1	15,86	30,85	24,46
040	40,0	36,85	2,47	36,6	4,36	36,35	6,81	36,35	9,72	36,1	13,57	36,1	17,83	35,85	27,53
045	45,0	–	–	–	–	41,35	7,57	41,35	10,83	41,1	15,07	41,1	19,77	40,85	30,60
050	50,0	–	–	–	–	46,35	8,34	46,35	11,93	46,1	16,58	46,1	21,75	45,85	33,67
055	55,0	–	–	–	–	–		–	–	51,1	18,08	51,1	23,71	50,85	36,74
060	60,0	–	–	–	–	–		–	–	56,1	19,58	56,1	25,67	55,85	39,81
065	65,0	–	–	–	–	–	–	–	–	61,1	21,08	61,1	27,64	60,85	42,88
070	70,0	–	–	–	–	–	–	–	–	66,1	22,58	66,1	29,60	65,85	45,95
075	75,0	–	–	–	–	–	–	–	–	–	–	–	–	70,85	49,02
080	80,0	–	–	–	–	–	–	–	–	–	–	–	–	75,85	52,08

4 Designation

Each pin shall only be designated as in the following example :

Description block	Identity block
PIN, SHEAR	EN2364-040016

Number of EN standard

040 = Diameter code (see table 1)

016 = Length code (see table 2)

Note : If necessary the originator code S9005 may be introduced between the description block and the identity block.

5 Marking

Each pin shall be marked in the positions shown in the figure in accordance with the marking style shown in table 3 as defined by EN 2424

Diameter code	Marking style
030 to 040	D
050 to 100	A

6 Technical specification

Pins supplied to this standard shall conform with the requirements of EN 2236