SLOVENSKI STANDARD
SIST EN 175301-801:2007

01-oktober-2007

Nadomeġļa:
SIST EN 175301-801:2002

Podrobna specifikacija: Pravokotni vodniki visoke gostote z okroglimi snemljivimi nasadnimi kontakti

Detail Specification: High density rectangular connectors, round removable crimp contacts

Bauartspezifikation: Hochpolige Rechteck-Steckverbinder mit runden auswechselbaren Crimpkontakten

Spécification particuliere: Connecteurs rectangulaires haute densité a contacts circulaires démontables a sertir

Ta slovenski standard je istoveten z: EN 175301-801:2006

ICS:

31.220.10	Vtiļi i in vtiļ nice, konektorji	Plug-and-socket devices. Connectors

SIST EN 175301-801:2007 **en**

EUROPEAN STANDARD

NORME EUROPÉENNE

EUROPÄISCHE NORM

EN 175301-801

November 2006

ICS 31.220.10

Supersedes EN 175301-801:1999

English version

Detail Specification: High density rectangular connectors, round removable crimp contacts

Spécification particulière: Connecteurs rectangulaires haute densité à contacts circulaires démontables à sertir

Bauartspezifikation: Hochpolige Rechteck-Steckverbinder mit runden auswechselbaren Crimpkontakten

This European Standard was approved by CENELEC on 2006-10-01. CENELEC members are bound to comply with the CEN/CENELEC Internal Regulations which stipulate the conditions for giving this European Standard the status of a national standard without any alteration.

Up-to-date lists and bibliographical references concerning such national standards may be obtained on application to the Central Secretariat or to any CENELEC member.

This European Standard exists in three official versions (English, French, German). A version in any other language made by translation under the responsibility of a CENELEC member into its own language and notified to the Central Secretariat has the same status as the official versions.

CENELEC members are the national electrotechnical committees of Austria, Belgium, Cyprus, the Czech Republic, Denmark, Estonia, Finland, France, Germany, Greece, Hungary, Iceland, Ireland, Italy, Latvia, Lithuania, Luxembourg, Malta, the Netherlands, Norway, Poland, Portugal, Romania, Slovakia, Slovenia, Spain, Sweden, Switzerland and the United Kingdom.

CENELEC

European Committee for Electrotechnical Standardization
Comité Européen de Normalisation Electrotechnique
Europäisches Komitee für Elektrotechnische Normung

Central Secretariat: rue de Stassart 35, B - 1050 Brussels

Ref. No. EN 175301-801:2006 E

Foreword

This European Standard was prepared by the CENELEC BTWG 117-1 "Revision of EN 175310-801 and EN 175301-803".

The text of the draft was submitted to the formal vote and was approved by CENELEC as EN 175301-801 on 2006-10-01.

This European Standard supersedes EN 175301-801:1999.

The following dates are proposed:

– latest date by which the EN has to be implemented at national level by publication of an identical national standard or by endorsement	(dop)	2007-10-01
– latest date by which the national standards conflicting with the EN have to be withdrawn	(dow)	2009-10-01

Contents

ELECTRONIC COMPONENTS OF ASSESSED QUALITY – DETAIL SPECIFICATION IN ACCORDANCE WITH EN 61076-1:1995	**EN 175301-801:2006**
See Clause 5 for dimensions 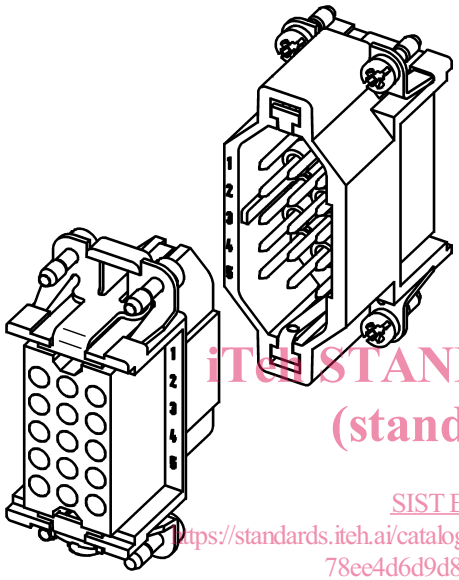	**1 Scope** Detail specification for high-density rectangular connectors, round removable crimp contacts 15, 25, 40 to 64 contacts + protective earth contacts (PE) Termination: crimp Performance level: 1 Assessment levels: B and G (*)

Climatic category:	see 7.1
Electrical characteristics:	see 7.2
Mechanical characteristics:	see 7.3
Ordering information:	see Clause 10
(*)	see Clauses 8 and 9

Information about manufacturers who have components qualified to this detail specification is available in the current CECC 00 200 (Register of Firms, Products and Services Approved under the CECC System).

2 Normative references

The following referenced documents are indispensable for the application of this document. For dated references, only the edition cited applies. For undated references, the latest edition of the referenced document (including any amendments) applies.

EN 2591	1992	Aerospace series – Elements of electrical and optical connection – Test methods – General
EN 60068-1	1994	Environmental testing – Part 1: General and guidance (IEC 60068-1:1988 + corrigendum October 1988 + A1:1992)
EN 60352-2 A1 A2	1994 1997 2002	Solderless connections – Part 2: Solderless crimped connections – General requirements, test methods and practical guidance (IEC 60352-2:1990 + A1:1996 + A2:2002)
EN 60512	Series	Connectors for electronic equipment – Tests and measurements (IEC 60512 series)
EN 60529 A1	1991 2000	Degrees of protection provided by enclosures (IP Code) (IEC 60529:1989 + A1:1999)
EN 60664-1	2003	Insulation co-ordination for equipment within low-voltage systems – Part 1: Principles, requirements and tests (IEC 60664-1:1992 + A1:2000 + A2:2002)
EN 61076-1 A1	1995 1996	Connectors with assessed quality, for use in d.c., low-frequency analogue and in digital high-speed data applications – Part 1: Generic specification – Capacity approval (IEC 61076-1:1995 + A1:1996)
EN 61076-7-100	2006	Connectors for electronic equipment - Product requirements – Part 7-100: Cable outlet accessories – Detail specification for a metric cable sealing consisting of an integrated part of heavy-duty rectangular or circular connector hoods and a sealing system (IEC 61076-7-100:2006)
EN 61984	2001	Connectors – Safety requirements and tests (IEC 61984-1:2001)
EN ISO 1043-1	2001	Plastics – Symbols and abbreviated terms – Part 1: Basic polymers and their special characteristics (ISO 1043-1:2001)
EN ISO 1043-2	2001	Plastics – Symbols and abbreviated terms – Part 2: Fillers and reinforcing materials (ISO 1043-2:2000)
EN ISO 1302	2002	Geometrical Product Specification (GPS) – Indication of surface texture in technical product documentation (ISO 1302:2002)
EN ISO 6743-4	2001	Lubricants, industrial oils and related products (class L) – Classification – Part 4: Family H (Hydraulic systems) (ISO 6743-4:1999)
EN ISO 11469	2000	Plastics – Generic identification and marking of plastics products (ISO 11469:2000)
IEC 60410	1973	Sampling plans and procedures for inspections by attributes

3 Type designation

Connectors, performance level and assessment level according to this specification shall be designated by the following system:

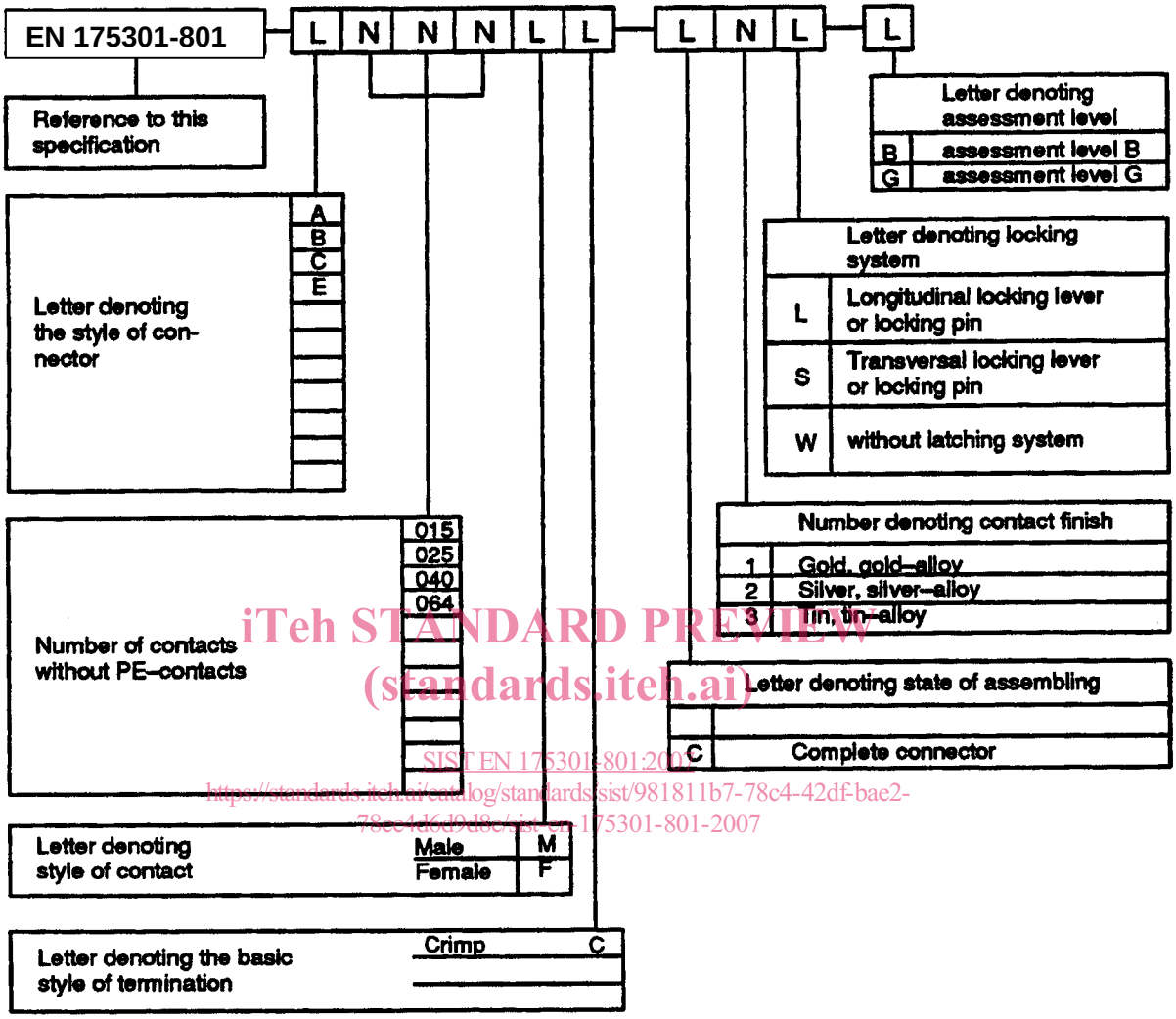

Note "L" stands for letter
"N" stands for number

Examples: Connector style E, having 15 male contacts with silver alloy contact finish with crimp terminations. Complete connector without latching system and with assessment level G: EN 175301-801-E015MC-C2W-G.

Connector style A, having 25 female contacts with silver alloy contact finish with crimp termination. Complete connector with latching system L and assessment level B: EN 175301-801-A025FC-C2L-B.

4 Common features

4.1 Isometric view

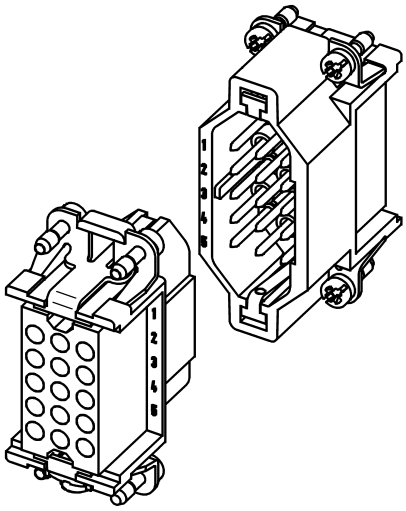

Figure 1 – Isometric view

4.2 Mating information

4.2.1 Plug-in direction

The specified contact resistance must be maintained on a mated pair, within the limits of the dimensions specified.

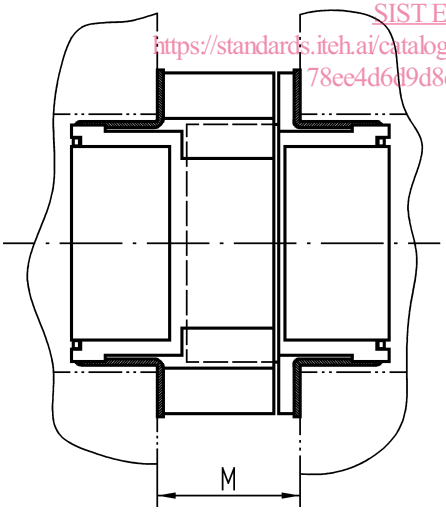

Specified contact resistance must also be met, if the fixed and free connectors could be engaged below dimension M = 19,5 mm resp. 22,3 mm.

Figure 2 – Plug-in direction

Table 1 – Plug-in direction – Dimensions

No. of contacts	M mm
15 + PE, 25 + PE	22,3 to 24
40 + PE, 64 + PE	19,5 to 21

4.2.2 Perpendicular to plug-in direction

The design of the connectors is such that a displacement of at least 0,5 mm in transversal and longitudinal direction of the connectors can be accomodated, to achieve necessary alignment of both parts if one part to the connector pairs is float mounted.

For fixed mounted connector pairs, the mounting must be kept accordingly in a sufficient small range.

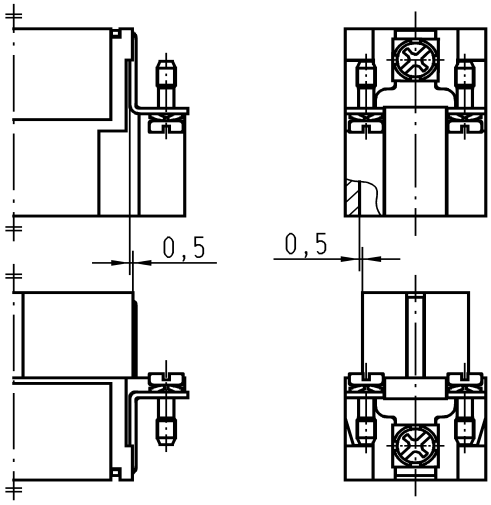

Figure 3 – Perpendicular to plug-in direction

4.2.3 Inclination

The design of the free and fixed connectors is such to allow for a misalignment of ± 5° in longitudinal axis and ± 2° in transverse axis. In the mated position the condition according to 4.2.1 must be met.

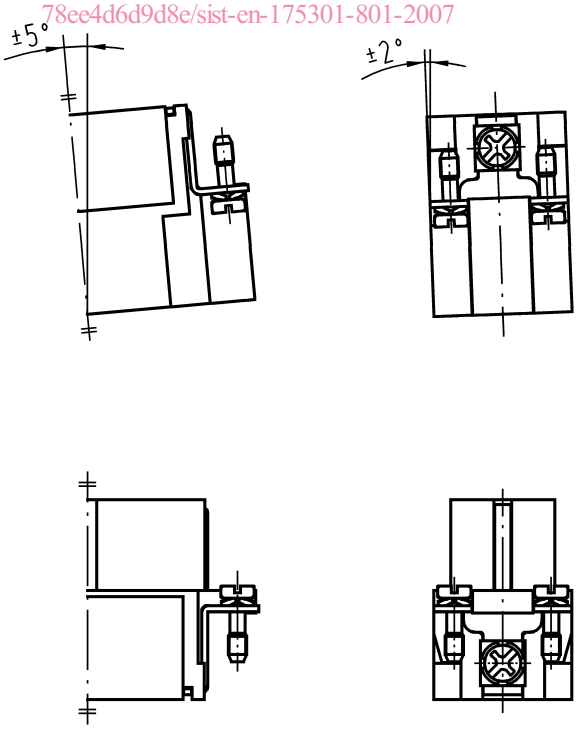

Figure 4 – Inclination

4.3 Survey of styles

Number of contacts: 15 + PE; 25 + PE; 40 + PE; 64 + PE

4.3.1 Fixed connector

Style A
Bulkhead mounting
receptacle [1)]

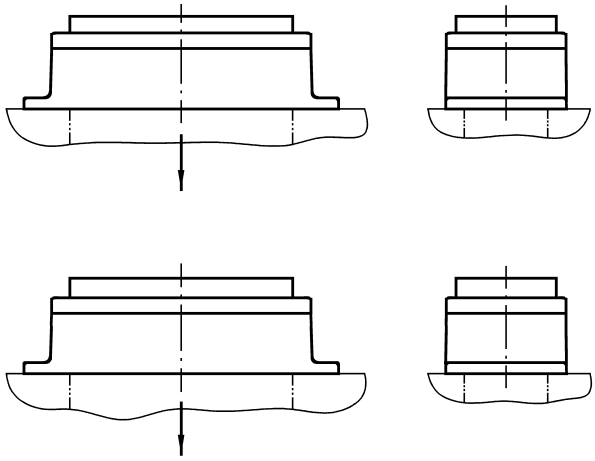

Variant M,
male contacts (AM)

Variant F,
female contacts (AF)

[1)] Alternatively with cover or hinged cover.

Figure 5 – Fixed connector – Style A

Style B
Box mounting
receptacle [1) 2)]

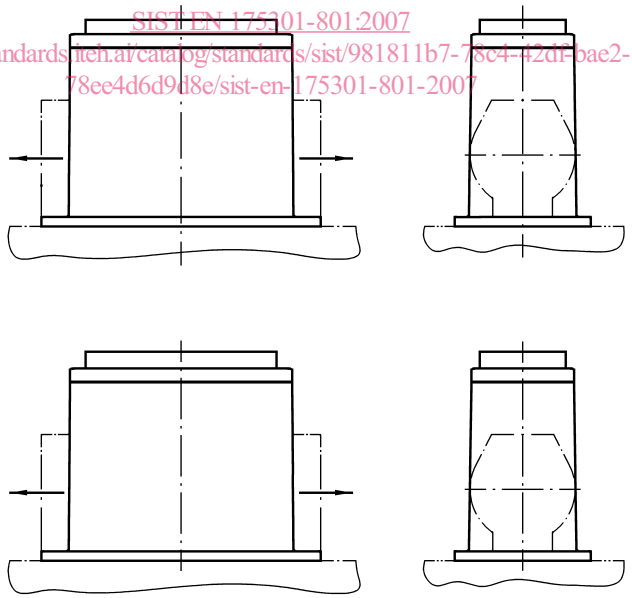

Variant M,
male contacts (BM)

Variant F,
female contacts (BF)

1) Alternatively with cover or hinged cover.

[2)] Cable outlet alternatively.

Figure 6 – Fixed connector – Style B

4.3.2 Free connector

Style C [1)]
straight plug

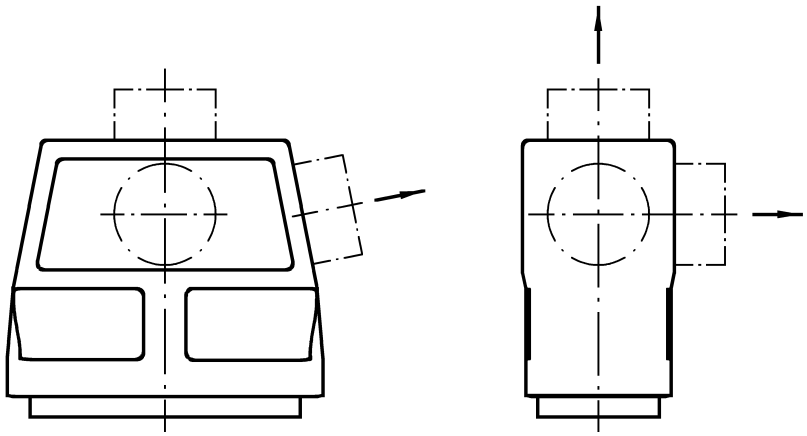

Variant M [2)]
male contacts
(CM)

Variant F [2)]
female contacts
(CF)

[1)] Cable outlet alternatively.

[2)] Outside view of variant M and F are identical.

Figure 7 – Free connector – Style C

Style E
connector insert

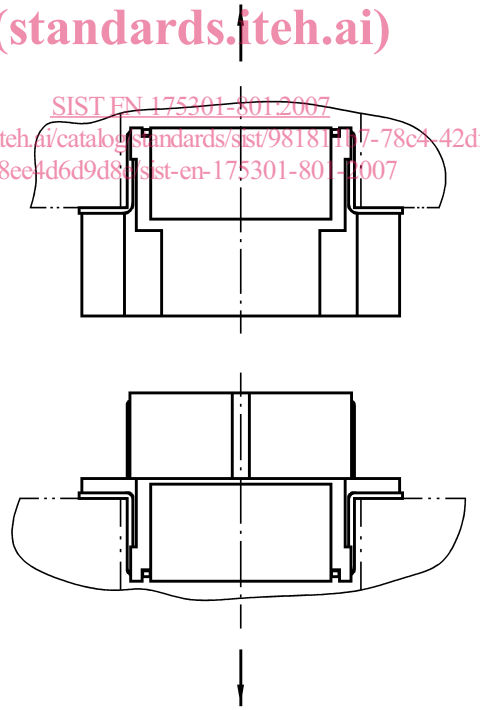

Variant M
male contacts (EM)

Variant F,
female contacts (EF)

Figure 8 – Free connector – Style E