SLOVENSKI STANDARD
SIST EN 2498:2001

01-januar-2001

Aerospace series - Rod ends, adjustable self-aligning plain bearing with self-lubricating liner and threaded shank - Dimensions and loads

Aerospace series - Rod ends, adjustable self-aligning plain bearing with self-lubricating liner and threaded shank - Dimensions and loads

Luft- und Raumfahrt - Einstellbare Ösenköpfe mit Gelenklager mit selbstschmierender Beschichtung und Gewindeschaft - Maße und Belastungen

Série aérospatiale - Embouts réglables à rotule à garniture autolubrifiante et à tige filetée - Dimensions et charges

Ta slovenski standard je istoveten z: EN 2498:1990

ICS:

49.035	Sestavni deli za letalsko in vesoljsko gradnjo	Components for aerospace construction

SIST EN 2498:2001 **en**

EUROPEAN STANDARD

NORME EUROPÉENNE

EUROPÄISCHE NORM

EN 2498

June 1990

UDC : 629.07.02 + 05 : 621.827.1 : 621.85.053.004.1 : 621.828 — 408.2.72

Key words : Aircraft industry, flight control, rod ends, swivel-end pieces, linings, self-lubricating parts, threaded ends, dimensions, static loads.

English version

Aerospace series
Rod ends, adjustable self-aligning plain bearing with self-lubricating liner and threaded shank
Dimensions and loads

Série aérospatiale
Embouts réglables
à rotule à garniture autolubrifiante
et à tige filetée
Dimensions et charges

Luft- und Raumfahrt
Einstellbare Ösenköpfe mit Gelenklager
mit selbstschmierender Beschichtung
und Gewindeschaft
Maße und Belastungen

This European Standard was accepted by CEN on 1990-01-10. CEN members are bound to comply with the requirements of CEN Internal Regulations which stipulate the conditions for giving this European Standard the status of a national standard without any alteration.

Up-to-date lists and bibliographical references concerning such national standards may be obtained on application to the CEN Central Secretariat or to any CEN member.

This European Standard exists in three official versions (English, French, German). A version in any other language made by translation under the responsibility of a CEN member into its own language and notified to CEN Central Secretariat has the same status as the official versions.

CEN members are the national standards organizations of Austria, Belgium, Denmark, Finland, France, Germany, Greece, Iceland, Ireland, Italy, Luxemburg, Netherlands, Norway, Portugal, Spain, Sweden, Switzerland and United Kingdom.

CEN

European Committee for Standardization
Comité Européen de Normalisation
Europäisches Komitee für Normung

Central Secretariat : Rue Bréderode 2, B—1000 Bruxelles

Brief history

This European Standard has been prepared by the European Association of Aerospace Manufacturers (AECMA).

After inquiries and votes carried out in accordance with the rules of this Association, this Standard has successively received the approval of the National Associations and the Official Services of the member countries of AECMA, prior to its presentation to CEN.

According to the Common CEN/CENELEC Rules, the following countries are bound to implement this European Standard : **Austria, Belgium, Denmark, Finland, France, Germany, Greece, Iceland, Ireland, Italy, Luxembourg, Netherlands, Norway, Portugal, Spain, Sweden, Switzerland and United Kingdom.**

1 Scope and field of application

This standard specifies the characteristics of adjustable rod ends consisting of :

- a self-aligning ball bearing with self-lubricating liner EN 2501 ;
- a rod end body with threaded shank consisting of :
  - a circumferential groove to identify location ;
  - an optional longitudinal groove for locking purposes.

These rod ends are intended for use with flight control rods or rods for aerospace structures.
They are provided to be used within the temperature range : − 55 °C to + 150 °C.

2 References

ISO 1132-1980	Rolling bearings - Tolerances - Definitions
ISO 3353	Aerospace construction - Rolled threads - Runout and lead threads
ISO 5855/1	Aerospace - MJ Threads - Part 1 : General requirements
ISO 5855/2	Aerospace - MJ Threads - Part 2 : Limit dimensions for bolts and nuts
EN 2064	Bearings, spherical plain in corrosion resisting steel with self-lubricating liners - Technical specification - Aerospace series [1]
EN 2068	Aerospace series - Rod ends with self-lubricating, self-aligning bearings - Technical specification [2]
EN 2133	Cadmium plating of steels with maximum specified tensile strength equal to or less than 1450 MPa, and copper and copper alloys - Aerospace series [1]
EN 2137	Steel FE-PL75 - 1100 MPa ⩽ R_m ⩽ 1250 MPa - Bars D_e ⩽ 100 mm - Aerospace series [1]
EN 2475	Steel FE-PL74 - 1100 MPa ⩽ R_m ⩽ 1300 MPa - Bars D_e ⩽ 100 mm - Aerospace series [1]
EN 2476	Steel FE-PL74 - 1100 MPa ⩽ R_m ⩽ 1300 MPa - Forgings D_e ⩽ 100 mm - Aerospace series [1]
EN 2501	Aerospace series - Bearings, spherical plain in corrosion resisting steel with self-lubricating liners and wide inner ring - Dimensions and loads
EN 2790	Aerospace series - Rod ends, adjustable self-aligning plain bearing with self-lubricating liner and threaded shank - Dimensions and loads [4].

3 Symbols

Δ_{ds} = deviation of a single bore diameter [3]

Δ_{dmp} = single plane mean bore diameter deviation [3]

α = maximum displacement angle which can be formed by the outer ring with the inner ring, with the spherical track of the outer ring fully in contact with the inner ring

C_{25} = permissible dynamic radial load by 25000 cycles (for definition see EN 2064).

4 Required characteristics

4.1 Dimensions - Tolerances

Configuration : See figure.

Dimensions and tolerances : See figure and tables 1 and 2, values after cadmium plating.

---

1) Published as AECMA standard.
2) In preparation.
3) For definition of tolerances see ISO 1132.
4) Published as AECMA pre-standard.

4.2 Surface roughness

See figure, values prior to cadmium plating.

4.3 Loads and rotational starting torques

See table 2.

4.4 Materials

Rod end body : Steel EN 2137 or EN 2475 or EN 2476 - Hardness 33 ⩽ HRC ⩽ 39.
Plain bearing : See EN 2501.

4.5 Surface treatment

Rod end body : Cadmium plating EN 2133, 7 μm to 20 μm except threads 5 μm to 10 μm chromate passivation optional.

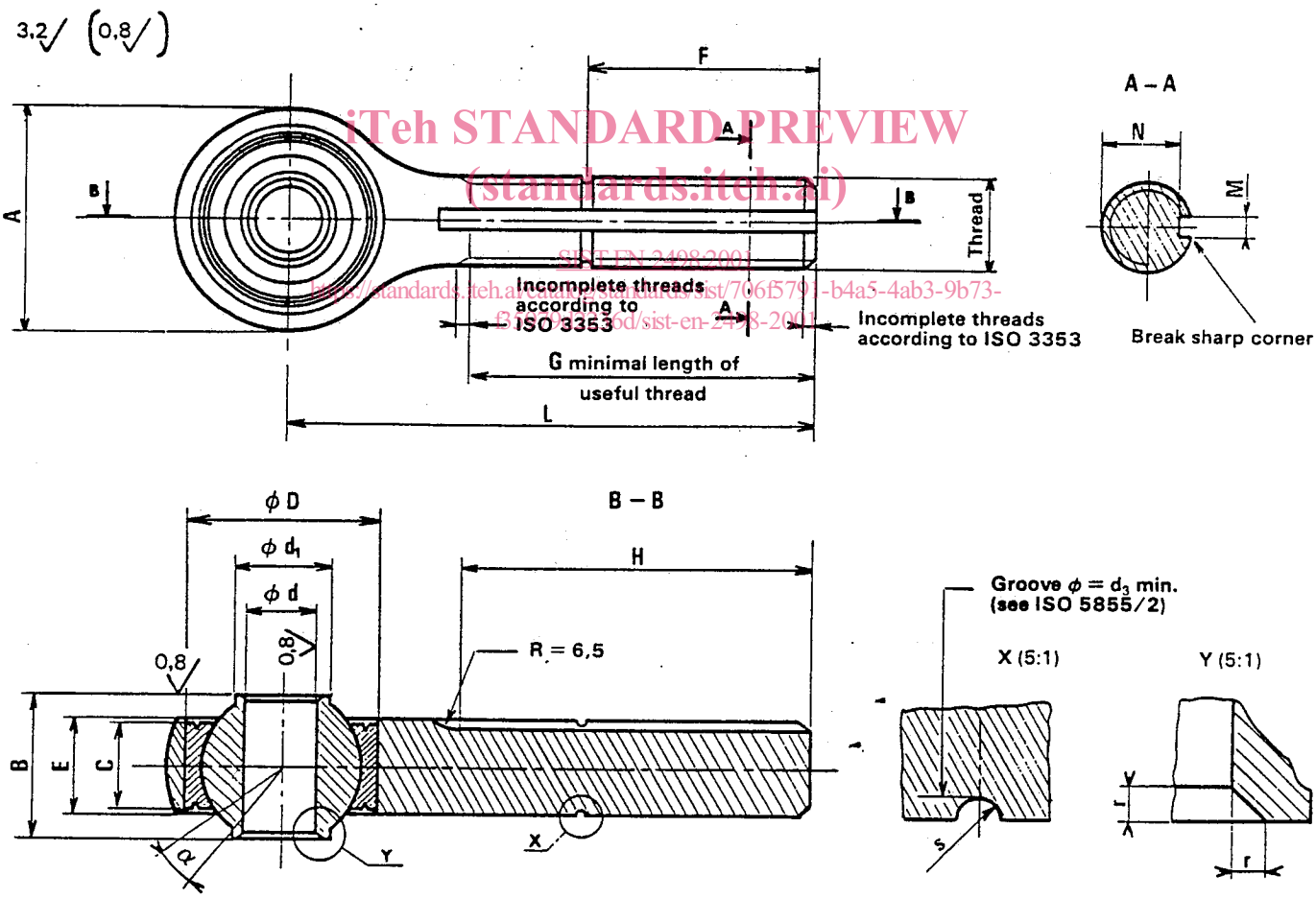

NOTE : The circumferential groove and the longitudinal groove over the distance F shall be painted red.

Figure

Table 1

Dimensions in millimetres

d		A	E	Thread [1]	F [2]	G	H	L	M	N	S	Mass
Code	Nominal diameter	+0,2 0	+0,1 0	designation	min.	min.	+0,5 −1	±0,5	+0,1 0	0 −0,1		≈ g
06 [3]	6	22,5	8,2	MJ 10 × 1,25 - 4h6h	22	37	37	54	2,4	8,0	0,8	46
08 [3]	8	26,0	10,2	MJ 12 × 1,25 - 4h6h	25	42	42	62		10,2		76
10	10	32,0	13,2	MJ 14 × 1,5 - 4h6h	31	48	48	73	3,2	12,2	1,0	135

1) Thread : According to ISO 5855 parts 1 and 2, rolled.
2) F : Minimum length of engaged threads, includes thickness of lock washer and height of nut.
3) The codes **06** and **08** shall not be used for new design (see EN 2790).

Table 2

Dimensions in millimetres

After swaging of the plain bearing in the rod end body				Spherical plain bearings with self-lubricating liner EN 2501 (Reference only)								
Permissible dynamic radial load [1] C_{25} kN	Axial push out load kN	Starting torque N.m	Ultimate static load kN [3]	B 0 −0,06	C +0,1 0	D [4]	d Nom.	d Tolerances µm Δ_{dmp}	d Tolerances µm Δ_{ds}	d_1 min.	r	α in degrees
16,6	4,5	0,45 to 1,30	27	14	8	18	6	0 −8	+ 2 −10	9,0	0,3 to 0,8	9
25,2	6,5	0,70 to 2,00	39	15	10	21	8			11,0		8
38,6 [2]	10,5		58	20	13	26	10			13,5		10

1) In direction of the axis of the rod end.
2) This load is a maximum of 2/3 ultimate static load of the rod end and not the load from EN 2501.
3) Ultimate loads are listed because failure will occur in the rod end and not the bearing. Users shall apply their own factors to obtain the permissible static load.
4) The relevant fit of the plain bearing in the housing to be to manufacturer's option.

5 Designation

Each rod end shall only be designated as in the following example :

Description block	Identity block
ROD END	EN2498L06K

Number of EN standard

L = code for left hand thread

06 = code for d (see table 1)

K = code for type with longitudinal groove

With application of the following codes :

L = left hand thread
R = right hand thread
K = with longitudinal groove
T = without longitudinal groove

NOTE : If necessary, the originator code I9005 may be introduced between the description block and identity block.

6 Marking

In addition to the manufacturer's own marking, each rod end shall be marked using the identity block specified in clause 5.

The position and method of marking are at the manufacturer's option, it shall not have any detrimental effect on the rod end.

7 Technical specification

Rod ends supplied according to this standard shall conform with the requirements of EN 2068.