IEC 62453-301

Edition 1.0 2009-06

INTERNATIONAL STANDARD

NORME INTERNATIONALE

colour inside

Field device tool (FDT) interface specification – Part 301: Communication profile integration – IEC 61784 CPF 1

iTeh STANDARD PREVIEW
(standards.iteh.ai)

Spécification des interfaces des outils des dispositifs de terrain (FDT) – Partie 301: Intégration des profils de communication – CEI 61784 CPF 1

IEC 62453-301:2009
https://standards.iteh.ai/catalog/standards/sist/32763f6f-a5a3-40fa-ac70-88d364a28849/iec-62453-301-2009

THIS PUBLICATION IS COPYRIGHT PROTECTED
Copyright © 2009 IEC, Geneva, Switzerland

All rights reserved. Unless otherwise specified, no part of this publication may be reproduced or utilized in any form or by any means, electronic or mechanical, including photocopying and microfilm, without permission in writing from either IEC or IEC's member National Committee in the country of the requester.
If you have any questions about IEC copyright or have an enquiry about obtaining additional rights to this publication, please contact the address below or your local IEC member National Committee for further information.

Droits de reproduction réservés. Sauf indication contraire, aucune partie de cette publication ne peut être reproduite ni utilisée sous quelque forme que ce soit et par aucun procédé, électronique ou mécanique, y compris la photocopie et les microfilms, sans l'accord écrit de la CEI ou du Comité national de la CEI du pays du demandeur.
Si vous avez des questions sur le copyright de la CEI ou si vous désirez obtenir des droits supplémentaires sur cette publication, utilisez les coordonnées ci-après ou contactez le Comité national de la CEI de votre pays de résidence.

IEC Central Office
3, rue de Varembé
CH-1211 Geneva 20
Switzerland

Tel.: +41 22 919 02 11
Fax: +41 22 919 03 00
info@iec.ch
www.iec.ch

About the IEC

The International Electrotechnical Commission (IEC) is the leading global organization that prepares and publishes International Standards for all electrical, electronic and related technologies.

About IEC publications

The technical content of IEC publications is kept under constant review by the IEC. Please make sure that you have the latest edition, a corrigenda or an amendment might have been published.

Useful links:

iTeh STANDARD PREVIEW
(standards.iteh.ai)

IEC publications search - www.iec.ch/searchpub

The advanced search enables you to find IEC publications by a variety of criteria (reference number, text, technical committee,…).
It also gives information on projects, replaced and withdrawn publications.

IEC 62453-301:2009
https://standards.iteh.ai/catalog/standards/sist/32763f6f-a3a3-401a-ac70-4a28849/iec-62453-301-2009

IEC Just Published - webstore.iec.ch/justpublished

Stay up to date on all new IEC publications. Just Published details all new publications released. Available on-line and also once a month by email.

Electropedia - www.electropedia.org

The world's leading online dictionary of electronic and electrical terms containing more than 30 000 terms and definitions in English and French, with equivalent terms in additional languages. Also known as the International Electrotechnical Vocabulary (IEV) on-line.

Customer Service Centre - webstore.iec.ch/csc

If you wish to give us your feedback on this publication or need further assistance, please contact the Customer Service Centre: csc@iec.ch.

A propos de la CEI

La Commission Electrotechnique Internationale (CEI) est la première organisation mondiale qui élabore et publie des Normes internationales pour tout ce qui a trait à l'électricité, à l'électronique et aux technologies apparentées.

A propos des publications CEI

Le contenu technique des publications de la CEI est constamment revu. Veuillez vous assurer que vous possédez l'édition la plus récente, un corrigendum ou amendement peut avoir été publié.

Liens utiles:

Recherche de publications CEI - www.iec.ch/searchpub

La recherche avancée vous permet de trouver des publications CEI en utilisant différents critères (numéro de référence, texte, comité d'études,…).
Elle donne aussi des informations sur les projets et les publications remplacées ou retirées.

Just Published CEI - webstore.iec.ch/justpublished

Restez informé sur les nouvelles publications de la CEI. Just Published détaille les nouvelles publications parues. Disponible en ligne et aussi une fois par mois par email.

Electropedia - www.electropedia.org

Le premier dictionnaire en ligne au monde de termes électroniques et électriques. Il contient plus de 30 000 termes et définitions en anglais et en français, ainsi que les termes équivalents dans les langues additionnelles. Egalement appelé Vocabulaire Electrotechnique International (VEI) en ligne.

Service Clients - webstore.iec.ch/csc

Si vous désirez nous donner des commentaires sur cette publication ou si vous avez des questions contactez-nous: csc@iec.ch.

IEC 62453-301

Edition 1.0 2009-06

INTERNATIONAL STANDARD

NORME INTERNATIONALE

colour inside

Field device tool (FDT) interface specification – Part 301: Communication profile integration – IEC 61784 CPF 1

iTeh STANDARD PREVIEW
(standards.iteh.ai)

Spécification des interfaces des outils des dispositifs de terrain (FDT) – Partie 301: Intégration des profils de communication – CEI 61784 CPF 1

IEC 62453-301:2009
https://standards.iteh.ai/catalog/standards/sist/527e5e9f-d3a3-40f1-a670-88d364a28849/iec-62453-301-2009

INTERNATIONAL
ELECTROTECHNICAL
COMMISSION

COMMISSION
ELECTROTECHNIQUE
INTERNATIONALE

PRICE CODE
CODE PRIX XF

ICS 25.040.40; 35.100.05; 35.110

ISBN 978-2-8322-0992-9

Warning! Make sure that you obtained this publication from an authorized distributor.
Attention! Veuillez vous assurer que vous avez obtenu cette publication via un distributeur agréé.

® Registered trademark of the International Electrotechnical Commission
Marque déposée de la Commission Electrotechnique Internationale

CONTENTS

FOREWORD 5
INTRODUCTION 7
1 Scope 8
2 Normative references 8
3 Terms, definitions, symbols, abbreviated terms and conventions 9
3.1 Terms and definitions 9
3.2 Abbreviated terms 9
3.3 Conventions 9
3.3.1 Data type names and references to data types 9
3.3.2 Vocabulary for requirements 9
3.3.3 Use of UML 10
4 Fundamentals 10
4.1 System and FDT topology 10
4.2 FDT topology for H1 devices 10
4.3 FDT topology for HSE devices 11
4.4 Nested communication 13
5 Bus category 14
6 Access to instance and device data 14
6.1 DTM 14
6.2 BTM 14
7 Protocol specific behavior 15
7.1 Connection management 15
7.1.1 FMS connection 15
7.1.2 FDT connection 16
7.2 Abort 16
7.2.1 OnAbort Indication 16
7.2.2 Abort request 17
7.3 Relation of FMS requests and FMS responses 17
7.4 Subscription mechanism 18
7.4.1 General 18
7.4.2 Transactions for subscribing H1 18
7.4.3 Transactions for subscribing HSE 19
7.4.4 Transactions for subscribing BTM 20
8 Protocol specific usage of general data types 20
8.1 Address 20
8.2 protocolID 20
8.3 applicationDomain 20
8.4 semanticId 21
8.4.1 Block specific definitions 21
8.4.2 Fieldbus management definitions 21
8.4.3 Fieldbus specific definitions 21
9 Protocol specific data types 22
9.1 DTM 22
9.1.1 Topology scan definitions 22
9.1.2 Parameter access 22
9.1.3 FF device data types 28

iTeh STANDARD PREVIEW
(standards.iteh.ai)
IEC 62453-301:2009
https://standards.iteh.ai/catalog/standards/sist/32763f6f-a3a3-40fa-ac70-88d364a28849/iec-62453-301-2009

9.2 BTM 29
9.2.1 General 29
9.2.2 Parameter access - FF specific definitions 29
10 Network management data types 43
10.1 General 43
10.2 H1 network management definitions 43
10.3 HSE network management data types 43
11 Communication data types 85
11.1 Common data types 85
11.2 FF FMS data types 90
11.3 H1 communication data types 96
11.4 HSE communication data types 103
11.5 FDT FF standard block communication data types 110
12 Channel parameter data types 112
13 Device identification 114
13.1 Protocol specific handling of data type STRING 114
13.2 Common device type identification data types 115
13.3 Scan identification data types 121
13.4 Device type identification data types – provided by DTM 121
Annex A (informative) Implementation hints 123
Annex B (normative) Levels of support 125
Bibliography 128

Figure 1 – Part 301 of the IEC 62453 series 7
Figure 2 – Object relations for H1 Device DTM 10
Figure 3 – Object relations for HSE application with DTMs and BTMs 12
Figure 4 – FMS mapping in the FDT connection 15
Figure 5 – FDT Disconnect service 16

Table 1 – Object relations for H1 Device DTM 11
Table 2 – Object relations for HSE application wtith DTMs and BTMs 13
Table 3 – FF specific protocol identifiers 14
Table 4 – Relation of FMS requests and FMS responses 17
Table 5 – Action object definitions (refer to FF-890): 23
Table 6 – Link object definitions 23
Table 7 – Alert object definitions 24
Table 8 – Trend object definitions 26
Table 9 – View definition 27
Table 10 – Domain object definitions 27
Table 11 – Program invocation object definitions 28
Table 12 – Structured FF device data types 29
Table 13 – Parameter mnemonic 30
Table 14 – Mnemonic of structured data types 38
Table 15 – Simple common data types 42
Table 16 – H1 Fieldbus Management data types 43

iTeh STANDARD PREVIEW
(standards.iteh.ai)
IEC 62453-301:2009
https://standards.iteh.ai/catalog/standards/sist/32763f6f-a3a3-40fa-ac70-88d36ca38d7f/iec-62453-301-2009

Table 17 – Simple HSE Fieldbus Management Definitions 43
Table 18 – Structured HSE Network management data types 49
Table 19 – Simple common data types 85
Table 20 – Structured common data types 87
Table 21 – Simple FF FMS data types 90
Table 22 – Structured FF FMS data types 91
Table 23 – Simple H1 communication data types 97
Table 24 – Structured H1 communication data types 98
Table 25 – Simple HSE communication data types 103
Table 26 – Structured HSE communication data types 104
Table 27 – Block communication data types 111
Table 28 – Simple FF channel data types 112
Table 29 – Structured FF channel data types 113
Table 30 – FieldbusFoundation H1 table 115
Table 31 – FieldbusFoundation HSE 117
Table 32 – FieldbusFoundation blocks 119
Table 33 – Simple Fieldbus Scan definitions 121
Table 34 – Device identification data types 122
Table B.1 – Levels of support 126

iTeh STANDARD PREVIEW
(standards.iteh.ai)
IEC 62453-301:2009
https://standards.iteh.ai/catalog/standards/sist/32763f6f-a3a3-40fa-ac70-88d364a28849/iec-62453-301-2009

INTERNATIONAL ELECTROTECHNICAL COMMISSION

FIELD DEVICE TOOL (FDT) INTERFACE SPECIFICATION –

Part 301: Communication profile integration – IEC 61784 CPF 1

FOREWORD

1) The International Electrotechnical Commission (IEC) is a worldwide organization for standardization comprising all national electrotechnical committees (IEC National Committees). The object of IEC is to promote international co-operation on all questions concerning standardization in the electrical and electronic fields. To this end and in addition to other activities, IEC publishes International Standards, Technical Specifications, Technical Reports, Publicly Available Specifications (PAS) and Guides (hereafter referred to as "IEC Publication(s)"). Their preparation is entrusted to technical committees; any IEC National Committee interested in the subject dealt with may participate in this preparatory work. International, governmental and non-governmental organizations liaising with the IEC also participate in this preparation. IEC collaborates closely with the International Organization for Standardization (ISO) in accordance with conditions determined by agreement between the two organizations.
2) The formal decisions or agreements of IEC on technical matters express, as nearly as possible, an international consensus of opinion on the relevant subjects since each technical committee has representation from all interested IEC National Committees.
3) IEC Publications have the form of recommendations for international use and are accepted by IEC National Committees in that sense. While all reasonable efforts are made to ensure that the technical content of IEC Publications is accurate, IEC cannot be held responsible for the way in which they are used or for any misinterpretation by any end user.
4) In order to promote international uniformity, IEC National Committees undertake to apply IEC Publications transparently to the maximum extent possible in their national and regional publications. Any divergence between any IEC Publication and the corresponding national or regional publication shall be clearly indicated in the latter.
5) IEC provides no marking procedure to indicate its approval and cannot be rendered responsible for any equipment declared to be in conformity with an IEC Publication.
6) All users should ensure that they have the latest edition of this publication.
7) No liability shall attach to IEC or its directors, employees, servants or agents including individual experts and members of its technical committees and IEC National Committees for any personal injury, property damage or other damage of any nature whatsoever, whether direct or indirect, or for costs (including legal fees) and expenses arising out of the publication, use of, or reliance upon, this IEC Publication or any other IEC Publications.
8) Attention is drawn to the Normative references cited in this publication. Use of the referenced publications is indispensable for the correct application of this publication.
9) Attention is drawn to the possibility that some of the elements of this IEC Publication may be the subject of patent rights. IEC shall not be held responsible for identifying any or all such patent rights.

iTeh STANDARD PREVIEW
(standards.iteh.ai)
IEC 62453-301:2009
https://standards.iteh.ai/catalog/standards/sist/32763f6f-a3a3-40fa-ac70-88d364a28240/iec-62453-301-2009

International Standard IEC 62453-301 has been prepared by subcommittee 65E: Devices and integration in enterprise systems, of IEC technical committee 65: Industrial-process measurement, control and automation.

This part, in conjunction with the other parts of the first edition of the IEC 62453 series cancels and replaces IEC/PAS 62453-1, IEC/PAS 62453-2, IEC/PAS 62453-3, IEC/PAS 62453-4 and IEC/PAS 62453-5 published in 2006, and constitutes a technical revision.

Each part of the IEC 62453-3xy series is intended to be read in conjunction with IEC 62453-2.

This bilingual version (2013-07) corresponds to the monolingual English version, published in 2009-06.

The text of this standard is based on the following documents:

FDIS	Report on voting
65E/125/FDIS	65E/138/RVD

Full information on the voting for the approval of this standard can be found in the report on voting indicated in the above table.

The French version of this standard has not been voted upon.

This publication has been drafted in accordance with the ISO/IEC Directives, Part 2.

A list of all parts of the IEC 62453 series, under the general title *Field Device Tool (FDT) interface specification,* can be found on the IEC website.

The committee has decided that the contents of this publication will remain unchanged until the maintenance result date indicated on the IEC web site under "http://webstore.iec.ch" in the data related to the specific publication. At this date, the publication will be

- reconfirmed,
- withdrawn,
- replaced by a revised edition, or
- amended.

iTeh STANDARD PREVIEW
(standards.iteh.ai)
IEC 62453-301:2009
https://standards.iteh.ai/catalog/standards/sist/32763f6f-a3a3-40fa-ac70-88d364a28849/iec-62453-301-2009

IMPORTANT – The 'colour inside' logo on the cover page of this publication indicates that it contains colours which are considered to be useful for the correct understanding of its contents. Users should therefore print this document using a colour printer.

INTRODUCTION

This part of IEC 62453 is an interface specification for developers of FDT (Field Device Tool) components for function control and data access within a client/server architecture. The specification is a result of an analysis and design process to develop standard interfaces to facilitate the development of servers and clients by multiple vendors that need to interoperate seamlessly.

With the integration of fieldbusses into control systems, there are a few other tasks which need to be performed. In addition to fieldbus- and device-specific tools, there is a need to integrate these tools into higher-level system-wide planning- or engineering tools. In particular, for use in extensive and heterogeneous control systems, typically in the area of the process industry, the unambiguous definition of engineering interfaces that are easy to use for all those involved is of great importance.

A device-specific software component, called DTM (Device Type Manager), is supplied by the field device manufacturer with its device. The DTM is integrated into engineering tools via the FDT interfaces defined in this specification. The approach to integration is in general open for all kinds of fieldbusses and thus meets the requirements for integrating different kinds of devices into heterogeneous control systems.

Figure 1 shows how IEC 62453-301 is aligned in the structure of the IEC 62453 series.

iTeh STANDARD PREVIEW
(standards.iteh.ai)
IEC 62453-301:2009
https://standards.iteh.ai/catalog/standards/sist/5...-ac70-88d364a28849/iec-62453-301-2009

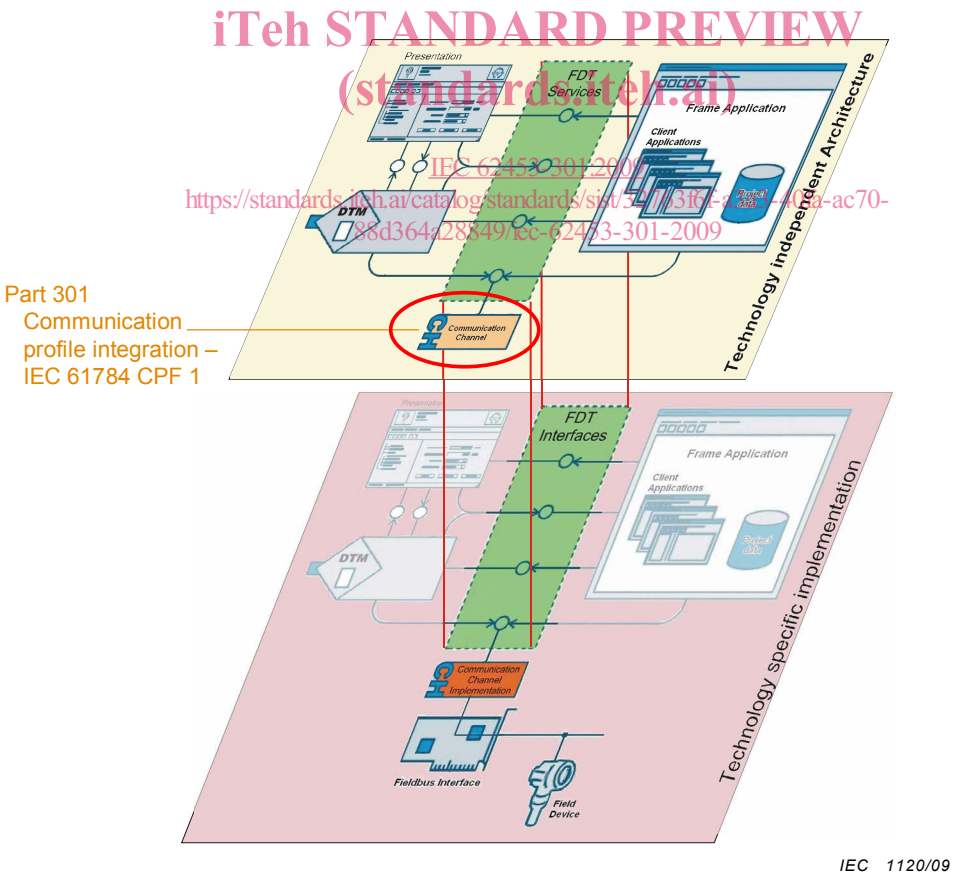

Figure 1 – Part 301 of the IEC 62453 series

FIELD DEVICE TOOL (FDT) INTERFACE SPECIFICATION –

Part 301: Communication profile integration – IEC 61784 CPF 1

1 Scope

Communication Profile Family 1 (commonly known as FOUNDATION™ Fieldbus[1]) defines communication profiles based on IEC 61158-2, Type 1, IEC 61158-3-1, IEC 61158-4-1, IEC 61158-5-5, IEC 61158-5-9, IEC 61158-6-5, and IEC 61158-6-9. The basic profiles CP 1/1 (FF H1) and CP 1/2 (FF HSE) are defined in IEC 61784-1.

This part of IEC 62453 provides information for integrating the FOUNDATION™ Fieldbus (FF) protocol into the FDT standard (IEC 62453-2).

The standard describes communication definitions, protocol specific extensions and the means for block (e.g. transducer, resource or function blocks) representation.

The new protocol specific definitions are based on FF-specifications for H1 and HSE protocols. Furthermore, the definitions contain information that is needed by systems to configure FF devices.

iTeh STANDARD PREVIEW
(standards.iteh.ai)

The scope is limited to FOUNDATION™ Fieldbus device and system specific definitions.

IEC 62453-301:2009
https://standards.iteh.ai/catalog/standards/sist/32763f6f-a3a3-40fa-ac70-88d364a28849/iec-62453-301-2009

2 Normative references

The following referenced documents are indispensable for the application of this specification. For dated references, only the edition cited applies. For undated references, the latest edition of the referenced document (including any amendments) applies

IEC 61158-2, *Industrial communication networks – Fieldbus specifications – Part 2: Physical layer specification and service definition*

IEC 61158-3-1, *Industrial communication networks – Fieldbus specifications – Part 3-1: Data-link layer service definition – Type 1 elements*

IEC 61158-4-1:2007, *Industrial communication networks – Fieldbus specifications – Part 4-1 Data-link layer protocol specification – Type 1 elements*

IEC 61158-5-5, *Industrial communication networks – Fieldbus specifications – Part 5-5: Application layer service definition – Type 5 elements*

IEC 61158-5-9, *Industrial communication networks – Fieldbus specifications – Part 5-9: Application layer service definition – Type 9 elements*

IEC 61158-6-5, *Industrial communication networks – Fieldbus specifications – Part 6-5: Application layer protocol specification – Type 5 elements*

---

1 FOUNDATION™ Fieldbus is a trade name of the non-profit organization Fieldbus Foundation. This information is given for the convenience of users of this International Standard and does not constitute an endorsement by IEC of the trade name holder or any of its products. Compliance to this standard does not require use of the trade name Foundation Fieldbus™. Use of the trade name FOUNDATION™ Fieldbus requires permission of Fieldbus Foundation.

IEC 61158-6-9, *Industrial communication networks – Fieldbus specifications – Part 6-9: Application layer protocol specification – Type 9 elements*

IEC 61784-1, *Industrial communication networks – Profiles – Part 1: Fieldbus profiles*

IEC 62453-1:2009, *Field Device Tool (FDT) interface specification – Part 1: Overview and guidance*

IEC 62453-2:2009, *Field Device Tool (FDT) interface specification – Part 2: Concepts and detailed description*

ISO 646, *Information technology – ISO 7-bit coded character set for information interchange*

3 Terms, definitions, symbols, abbreviated terms and conventions

3.1 Terms and definitions

For the purposes of this document, the terms and definitions given in IEC 62453-1 and IEC 62453-2 apply.

3.2 Abbreviated terms

For the purposes of this document, the abbreviations given in IEC 62453-1, IEC 62453-2 and the following apply.

iTeh STANDARD PREVIEW
(standards.iteh.ai)

SM	System Management
FDA	Federation Drug Association
FF	FOUNDATION™ Fieldbus
FMS	Fieldbus Message Specification
DTM	Device Type Manager
BTM	Block Type Manager
H1	Low speed version of FF
HSE	High Speed Ethernet

IEC 62453-301:2009
https://standards.iteh.ai/catalog/standards/sist/32763f6f-a3a3-40fa-ac70-88d364a28849/iec-62453-301-2009

3.3 Conventions

3.3.1 Data type names and references to data types

The conventions for naming and referencing of data types are explained in IEC 62453-2 Clause A.1

3.3.2 Vocabulary for requirements

The following expressions are used when specifying requirements.

Usage of “shall” or “mandatory”	No exceptions allowed.
Usage of “should” or “recommended”	Strong recommendation. It may make sense in special exceptional cases to differ from the described behaviour.
Usage of “can’ or “optional’	Function or behaviour may be provided, depending on defined conditions.

3.3.3 Use of UML

Figures in this standard are using UML notation as defined in Annex A of IEC 62453-1.

4 Fundamentals

4.1 System and FDT topology

This standard provides communication definitions, protocol-specific extensions and means for device and block (e.g. resource, transducer or function blocks) configuration.

The communication definitions provide System Management (SM) and Fieldbus Message Specification (FMS) communication.

Separate definitions are designed to support the different management parameters and structures for H1 and HSE devices.

Protocol-specific definitions can be used to identify FOUNDATION™ Fieldbus devices and their internal structure.

A FOUNDATION™ Fieldbus device is represented by a Device Type Manager (DTM) together with a group of Block Type Managers (BTM). Each BTM represents the functionality of a block functionality in an FF device.

iTeh STANDARD PREVIEW
(standards.iteh.ai)

4.2 FDT topology for H1 devices

An FF H1 topology may contain Communication DTM, Device DTM and BTMs.

IEC 62453-301:2009
https://standards.iteh.ai/catalog/standards/sist/32763f6f-a3a3-40fa-ac70-88d364a28849/iec-62453-301-2009

EXAMPLE
The typical FDT topology for H1 devices is illustrated in Figure 2 and Table 1.

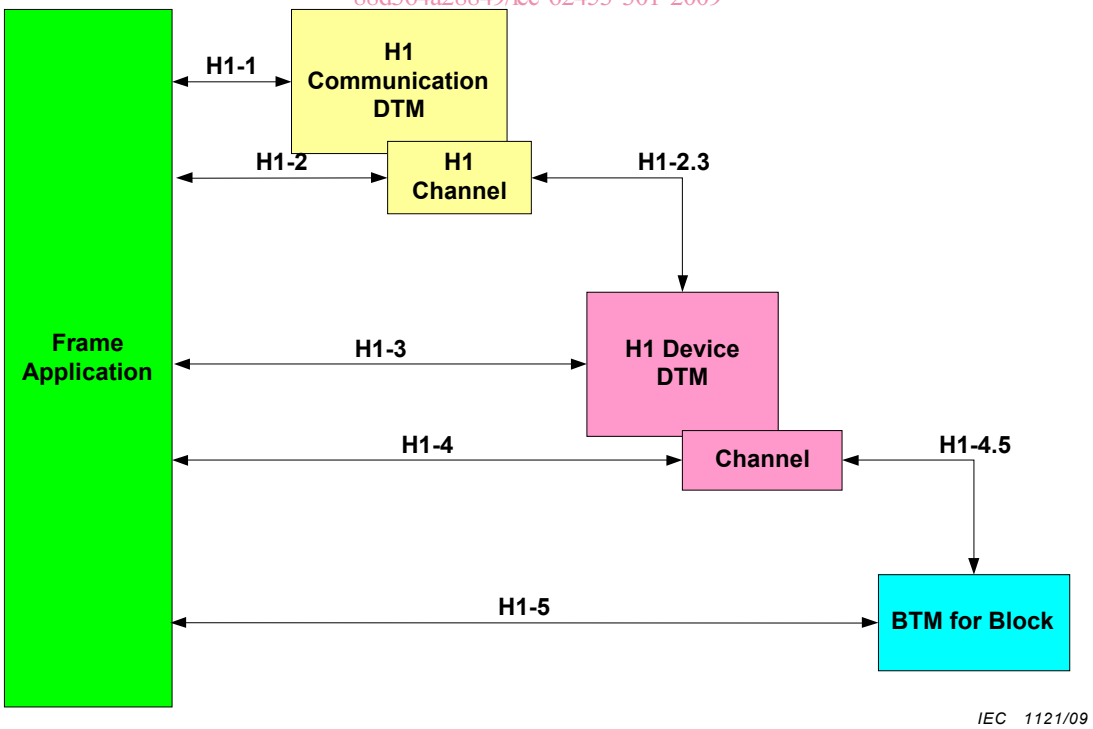

Figure 2 – Object relations for H1 Device DTM

Table 1 – Object relations for H1 Device DTM

Relation	Type of information	Used definitions
H1-1	Management Parameter Access	H1 Management data types (see 10.2) FF common data types (see 11.1)
H1-2	Network Topology	FF common data types (see 11.1) Identification data types (see 13.4) Scan identification data types (see 13.3)
	Channel Parameter Access	Channel parameter data types (see 12)
H1-3	Management Parameter Access	H1 Management data types (see 10.2) FF common data types (see 11.1)
H1-4	List of instantiated blocks	FF common data types (see 11.1) BTM data types (see IEC 62453-2) FF block data types (see 9.2.2) Identification data types (see 13.4) Scan identification data types (see 13.3)
	Channel Parameter Access	Channel parameter data types (see 12)
H1-5	Block Information	BTM Information data types (see IEC 62453-2) BTM data types (see IEC 62453-2) Identification data types (see 13.4) Identification data types (see 13.4))
	Initialization of BTM	BTM Init data types (see IEC 62453-2) BTM data types (see IEC 62453-2)
	Parameter Access	BTM parameter data types (see IEC 62453-2) BTM data types (see IEC 62453-2)
H1-2.3	Communication	FF FMS data types (see 11.2) H1 communication data types (see 11.3) FF common data types (see 11.1)
H1-4.5	Block communication	FF FMS data types (see 11.2) FF Block communication data types (see 11.5) BTM data types (see IEC 62453-2) FF common data types (see 11.1)

iTeh STANDARD PREVIEW
(standards.iteh.ai)
IEC 62453-301:2009
https://standards.iteh.ai/catalog/standards/sist/32763f6f-a3a3-401a-ac70-88d364a28849/iec-62453-301-2009

4.3 FDT topology for HSE devices

An FF HSE topology may contain Communication DTM, GatewayDTM, Device DTM and BTMs.

EXAMPLE

The typical FDT topology for a HSE based system is illustrated by Figure 3 and Table 2:

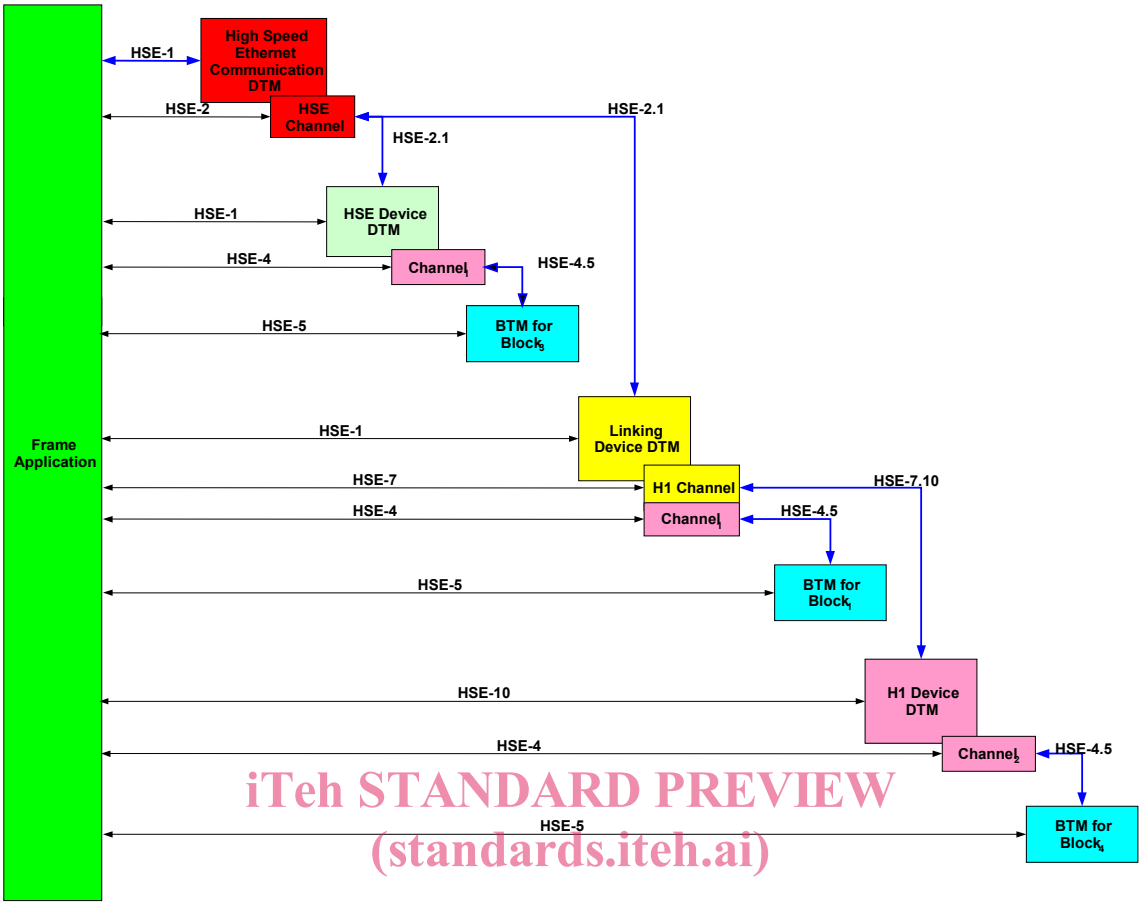

iTeh STANDARD PREVIEW
(standards.iteh.ai)
IEC 62453-301:2009
https://standards.iteh.ai/catalog/standards/sist/...-88d364a28849/iec-62453-301-2009

Figure 3 – Object relations for HSE application with DTMs and BTMs

In this illustration, blue lines show the object hierarchy as it is managed in the FDT Frame Application.

Table 2 – Object relations for HSE application wtith DTMs and BTMs

Relation	Type of information	Used definitions
HSE-1	Management Parameter Access	FF HSE management data types (see 10.3)
HSE-2	Network Topology	FF common data types (see 11.1) Identification data types (see 13.4) Scan identification data types (see 13.3)
	Channel Parameter Access	Channel parameter data types (see Clause 12)
HSE-2.1	Communication	FF FMS data types (see 11.2) FF HSE communication data types (see 11.4) FF common data types (see 11.1)
HSE-4.5	Block communication	FF FMS data types (see 11.2) FF Block communication data types (see 11.5) FF common data types (see 11.1) BTM data types (see IEC 62453-2)
HSE-4	List of instantiated blocks	FF common data types (see 11.1) BTM data types (see IEC 62453-2) Identification data types (see 13.4) Scan identification data types (see 13.3)
	Channel Parameter Access	Channel parameter data types (see Clause 12)
HSE-5	Block Information	BTM Information data types (see IEC 62453-2) BTM data types (see IEC 62453-2) Identification data types (see 13.4)
	Initialization of BTM	BTM Init data types (see IEC 62453-2) BTM data types (see IEC 62453-2)
	Parameter Access	BTM parameter data types (see IEC 62453-2) BTM data types (see IEC 62453-2)
HSE-7	Network Topology	FF common data types (see 11.1) FF HSE communication data types (see 11.4) FF Block communication data types (see 11.5)
	Channel Parameter Access	Channel parameter data types (see Clause 12) H1 Management data types (see 10.2)
	Parameter Access	BTM parameter data types (see IEC 62453-2)
HSE-10	Management Parameter Access	H1 Management data types (see 10.2) FF common data types (see 11.1)
HSE-7.10	Communication	FF FMS data types (see 11.2) H1 communication data types (see 11.3) FF common data types (see 11.1)

iTeh STANDARD PREVIEW
(standards.iteh.ai)
IEC 62453-301:2009
https://standards.iteh.ai/catalog/standards/sist/32763f6f-a3a3-401a-ac70-88d364a28849/iec-62453-301-2009

4.4 Nested communication

Standard FF blocks may be handled by BTMs implementing the standard behavior. These BTMs may be connected to the corresponding DTM that provides the support of an “FDT FF STANDARD BLOCK” communication protocol.

For device-specific BTMs, a device specific (it may be unique) bus category (CATID) shall be defined for the protocol between DTM and BTM.