INTERNATIONAL STANDARD

ISO 8858-1

First edition
1990-09-01

Hard coal — Froth flotation testing —

Part 1:
Laboratory procedure

Houille — Essais de flottation —

Partie 1: Méthode de laboratoire

Reference number
ISO 8858-1:1990(E)

Foreword

ISO (the International Organization for Standardization) is a worldwide federation of national standards bodies (ISO member bodies). The work of preparing International Standards is normally carried out through ISO technical committees. Each member body interested in a subject for which a technical committee has been established has the right to be represented on that committee. International organizations, governmental and non-governmental, in liaison with ISO, also take part in the work. ISO collaborates closely with the International Electrotechnical Commission (IEC) on all matters of electrotechnical standardization.

Draft International Standards adopted by the technical committees are circulated to the member bodies for voting. Publication as an International Standard requires approval by at least 75 % of the member bodies casting a vote.

International Standard ISO 8858-1 was prepared by Technical Committee ISO/TC 27, *Solid mineral fuels*.

ISO 8858 consists of the following part, under the general title *Hard coal — Froth flotation testing*:

— *Part 1: Laboratory procedure*

ISO 8858-2 will be published later.

Annex A of this part of ISO 8858 is for information only.

International Organization for Standardization
Case Postale 56 • CH-1211 Genève 20 • Switzerland

Printed in Switzerland

Introduction

The froth flotation of coal has widespread application for the concentration and separation of fine coal particles from mineral matter. The response of coal to the froth flotation process is initially measured by a laboratory scale test. Although the principles used for the laboratory tests are generally similar, the precise type of equipment and techniques used vary considerably.

The procedure for the laboratory froth flotation test sets out, in detail, the type of equipment to be used and the methods to be adopted. The purpose of this procedure is to provide a standard method of test by which a preliminary evaluation of the froth flotation characteristics of a coal can be compared. This need is particularly important for exploration programmes. This part of ISO 8858 also serves as an introduction for operators who are not familiar with the techniques (and problems) associated with the laboratory froth flotation of coals.

This page intentionally left blank

Hard coal — Froth flotation testing —

Part 1:
Laboratory procedure

1 Scope

This part of ISO 8858 sets out a laboratory procedure for the froth flotation testing of fine coal, e.g. coal of particle size less than 0,5 mm. The procedure provides a means of evaluationg the general flotation characteristics of a coal under a set of specified standard conditions and will not necessarily indicate the full flotation potential of that coal.

The flotation characteristics of coals are sensitive to changes in flotation conditions. These conditions can be changed by varying such basic parameters as flotation time, reagent and dosage rate. Separate flotation tests are required to assess the effect of varying these parameters to determine the best flotation conditions for a particular coal. A method of evaluating flotation response will be given in a separate standard.

2 Normative references

The following standards contain provisions which, through reference in this text, constitute provisions of this part of ISO 8858. At the time of publication, the editions indicated were valid. All standards are subject to revision, and parties to agreements based on this part of ISO 8858 are encouraged to investigate the possibility of applying the most recent editions of the standards indicated below. Members of IEC and ISO maintain registers of currently valid International Standards.

ISO 331:1983, *Coal — Determination of moisture in the analysis sample — Direct gravimetric method.*

ISO 565:1990, *Test sieves — Metal wire cloth, perforated metal plate and electroformed sheet — Nominal sizes of openings.*

ISO 648:1977, *Laboratory glassware — One-mark pipettes.*

ISO 1171:1981, *Solid mineral fuels — Determination of ash.*

ISO 1213-1:1982, *Solid mineral fuels — Vocabulary Part 1: Terms relating to coal preparation.*

ISO 1953:1972, *Hard coals — Size analysis.*

ISO 1988:1975, *Hard coal — Sampling.*

3 Definitions

For the purposes of this part of ISO 8858, the definitions in ISO 1213-1 apply. The following definitions from ISO 1213-1 are repeated for information only.

3.1 collector; collecting agent: A reagent added to a pulp to bring about adhesion between solid particles and air bubbles.

3.2 flotation concentrate: The clean product recovered in froth flotation.

3.3 conditioning: The preparatory stage in the flotation process in which the reagents are brought into intimate contact with the solids of the pulp.

3.4 frother; frothing agent: A reagent used to control the size and stability of the air bubbles in the flotation process.

3.5 froth flotation: A process for cleaning fine coal in which the coal, with the aid of a reagent or reagents, becomes attached to air bubbles in a liquid medium and floats as a froth.

3.6 pulp: A mixture of solid particles and water.

3.7 flotation tailings: The reject from froth flotation cells.

4 Principle

Mixing of a coal sample with water to form a suspension in the flotation cell. Addition of collector and frother and introduction of air. Separate recovery of the concentrate and tailings and determination of the yield and ash of each.

NOTE 1 The use of chemical additives or heat can affect the flotation characteristics of the coal.

5 Reagents

During the analysis, use only reagents of recognized analytical grade and only distilled water or water of equivalent purity.

5.1 Collector, *n*-Dodecane.

5.2 Frother, Methyl iso-butyl carbinol (MIBC), (4-Methylpentan-2-ol), 0,14 % (*V*/*V*) aqueous solution.

6 Apparatus

The apparatus shall be a mechanical impeller type flotation machine (see figure 1) with the following specifications.

6.1 Flotation cell, manufactured from stainless steel.

Figure 2 shows the dimensions of the flotation cell. The capacity of the cell with the deflector block and impeller in place is approximately 3,5 litres.

It has been shown that the results obtained from laboratory froth flotation tests are very dependent on the procedure used to remove the concentrate from the surface of the pulp. For this reason, a deflector block manufactured from plastics material (see figure 3) is used to guide the concentrate to a rectangular area in front of the impeller housing. The concentrate can then be removed by means of a scraper (see figure 4) which is designed to cover the full width of the cell to a constant depth.

In order to establish the volume of pulp which can be contained in the flotation cell, the deflector block is fitted into the cell and water is added to the flotation cell to about 20 mm to 30 mm below the required pulp level. The impeller is started (air valve off) and additional water is added to the required mark (see 8.4). The impeller is stopped, the deflector block removed, and the volume of water in the flotation cell is measured.

6.2 Impeller assembly, of stainless steel and capable of rotation at frequencies up to 1 500 rev/min (equivalent to a speed of 5,7 m/s at the periphery). The dimensions of the impeller and diffuser are shown in figures 5 and 6.

The lower face of the impeller shall be positioned no more than 5 mm from the base of the cell.

NOTE 2 Impellers constructed of other materials may be used, provided that it can be shown that the characteristics of flotation for the cell are similar to those obtained when a stainless steel impeller is used. To achieve this, different impeller rotational frequencies may be used if necessary.

6.3 Constant level control, maintaining the level of the pulp in the cell during the flotation test.

6.4 Scraper, of the design shown in figure 4. Its clearance at the sides of the cell shall be minimal and should not exceed 2 mm. The scraper shall be of such dimensions that it clears the pulp level (as defined in 8.4) by not more than 2 mm.

6.5 Calibrated micro-syringe, for the addition of the collector (5.1).

6.6 Pipette, of capacity 25 ml, complying with ISO 648, for the addition of the frother solution (5.2).

6.7 Timing device, accurate to 1 s and capable of being zeroed and started as required.

6.8 Test sieves, complying with ISO 565, for the particle size analysis of the feed.

7 Sampling

The history and method of preparation of samples can affect considerably the flotation characteristics of the coal. The origin of the sample should be recorded and care should be taken to ensure that samples for comparison purposes are prepared in a similar manner. Since repeat tests are required together with sub-sampling for particle size and moisture determination, great care should be taken in mixing and subdivision of the original sample. Where applicable, all sampling and subdivision of samples should be carried out in accordance with the procedures specified in ISO 1988.

The quantity of gross sample required is at least five times the quantity required for a single flotation test. The latter quantity can be determined by reference to 8.3.

Where the sample for flotation testing is obtained in pulp (or slurry) form, it will be necessary to separate the solids from the water before the procedures laid down in this part of ISO 8858 can be applied. Dewatering shall be by natural settlement followed by

decantation and filtration. No chemicals or heat shall be used in the dewatering process as they may affect the surface properties of the materials and change their flotation characteristics.

The results of the flotation test are influenced by the particle size and a complete particle size analysis of the coal, carried out according to ISO 1953, should be reported (see annex A). A sub-sample should also be retained for the determination of ash and other parameters as required (see 9.2).

8 Flotation conditions

8.1 Operating temperature

The operating temperature shall be 25 °C ± 10 °C.

8.2 Water

Water complying with clause 5 shall be used.

8.3 Solids content

The solids content of the sample to be tested shall be 100 g of solids (on a dry basis) per litre of pulp. For example, when the effective cell volume is 3,5 litres the sample mass is 350 g of dry solids plus any associated moisture as previously determined, see 9.1.

8.4 Pulp level

The pulp level shall be 20 mm ± 2 mm below the overflow lip of the cell when the impeller is rotating at 1 500 rev/min and the air is off.

8.5 Collector

The quantity of collector (5.1) added shall be equivalent to 1 ml/kg of dry solids. For example, for a cell volume of 3,5 litres, a volume of 0,35 ml of collector will be required.

8.6 Frother

The quantity of frother (5.2) to be added shall be 0,1 ml of MIBC per kilogram of dry solids. For example, for a cell volume of 3,5 litres, a volume of 25 ml of the solution (5.2) will be required.

8.7 Air flow rate

The air flow rate shall be 4 l/min ± 0,4 l/min. It is recommended that this flow rate be controlled by the use of a needle valve and measured by means of a flowmeter, and that a separate on/off valve be provided.

9 Procedure

9.1 From a representative sub-sample, determine the moisture content and ash percentage of the coal sample (clause 7) by the procedures specified in ISO 331 and ISO 1171 respectively. Calculate the mass of coal required for the flotation test from the measured cell volume (6.1) and the specified solids content of the sample to be tested (8.3).

9.2 From the coal sample (clause 7), take representative sub-samples of appropriate mass for particle size analysis (and determination of other parameters as required), and for the individual flotation tests.

NOTE 3 External factors such as exposure of a coal sample to heat or prolonged exposure to atmosphere can severely affect the flotation characteristics of coal. In order to asses the reliability and repeatability of flotation tests, at least one repeat test should be carried out on any one coal sample.

9.3 Gradually transfer a flotation test sub-sample into the cell containing 1 000 ml of water, with the impeller rotating at 1 000 rev/min and the air inlet closed. Mix for 2 min, slowly add more water and increase the rotational frequency until the required level and a frequency of 1 500 rev/min are reached. Agitate for a further 2 min.

NOTE 4 The purpose of this procedure is to ensure thorough wetting of the sample. Variations in nominated conditions are permissible.

9.4 Add the collector (5.1), beneath the surface of the pulp by means of a calibrated micro-syringe (6.5) and start the timing device. Condition for 1 min, then add the frother solution (5.2) beneath the surface of the pulp using a pipette (6.6). Open the air valve after an additional 10 s of conditioning. Open the tap connecting the cell to the constant level control as concentrate is removed.

NOTE 5 A significant amount of floated coal may adhere to the sides of the cell above the water level. Since this coal has been floated it should be washed back into the concentrate so that it may be removed from the cell by the scraper. A minimal amount of water should be used.

9.5 Every 15 s move the scraper through the concentrate and collect a froth increment. The recessed edge of the scraper shall rest on the top edge of the cell and the movement of the scraper should be gradual, to ensure that pulp is not collected with the froth.

9.6 Collect the total froth produced over a period of 3 min frothing time.

9.7 At the end of 3 min, stop the impeller and restore to the concentrate any particles adhering to the sides of the cell and the impeller housing. A small paint brush may be useful for this purpose. Then remove the concentrate from the surface of the pulp by means of the scraper.

Turn off the valve to the constant level control tank. Any material remaining on the scraper or on the cell lip should be washed into the concentrate using water. Any material remaining on the impeller or deflector block should be washed into the tailings.

9.8 Dewater and dry the concentrate and tailings separately to constant mass (see note 6) and weigh. Determine the percentage of ash (and any other parameters required) of each in accordance with the appropriate International Standard.

NOTES

6 Where special tests are to be made on the concentrate, it may be necessary for it to be air-dried. In such cases the moisture content of the concentrate should be determined to enable the results to be calculated to a dry basis.

7 Do not oven-dry any sample on which caking or coking tests are to be carried out or samples which are prone to excessive oxidation. In these cases, air-dry the sample and determine the moisture content of the air-dried product on a sub-sample.

8 Flocculants may be added as a filtration aid, provided that the products are not required for additional flotation tests. In general, flocculants have an adverse effect on flotation.

9.9 The procedures described in 9.3 to 9.8 should be repeated at least once (see note 3).

10 Expression of results

The mass of the reconstituted feed (m_R) is the sum of the masses of the concentrate (m_C) and the tailings (m_T). If m_R differs significantly (e.g. by more than 3 %) from the mass of the initial feed, then the test should be repeated. The mass percent reporting to the concentrate, also known as the yield, is given by the formula

$$\frac{m_C}{m_R} \times 100$$

The mass percent reporting to the tailings is given by the formula

$$\frac{m_T}{m_R} \times 100$$

11 Test report

The test report shall contain the following information:

a) date test was carried out;

b) complete identification of the sample;

c) history of the sample;

d) a reference to this part of ISO 8858;

e) particle size analysis of the sample and ash percentage of each size fraction;

f) mass of feed, concentrate and tailings expressed on a dry basis;

g) ash percentage of feed, concentrate and tailings;

h) mass distribution;

i) other properties as required;

j) where repeat tests are carried out, the arithmetic mean and range of determined values. If the respective absolute values for yield and ash from replicate tests are within 5 % (yield) or 0,5 % (ash), the results shall be reported as an arithmetic mean with the number of tests and range of values clearly stated. If the results of duplicate tests are outside the prescribed limit, a third test shall be carried out and the results of each test shall be reported separately.

See annex A for a recommended layout of a form for a test report.

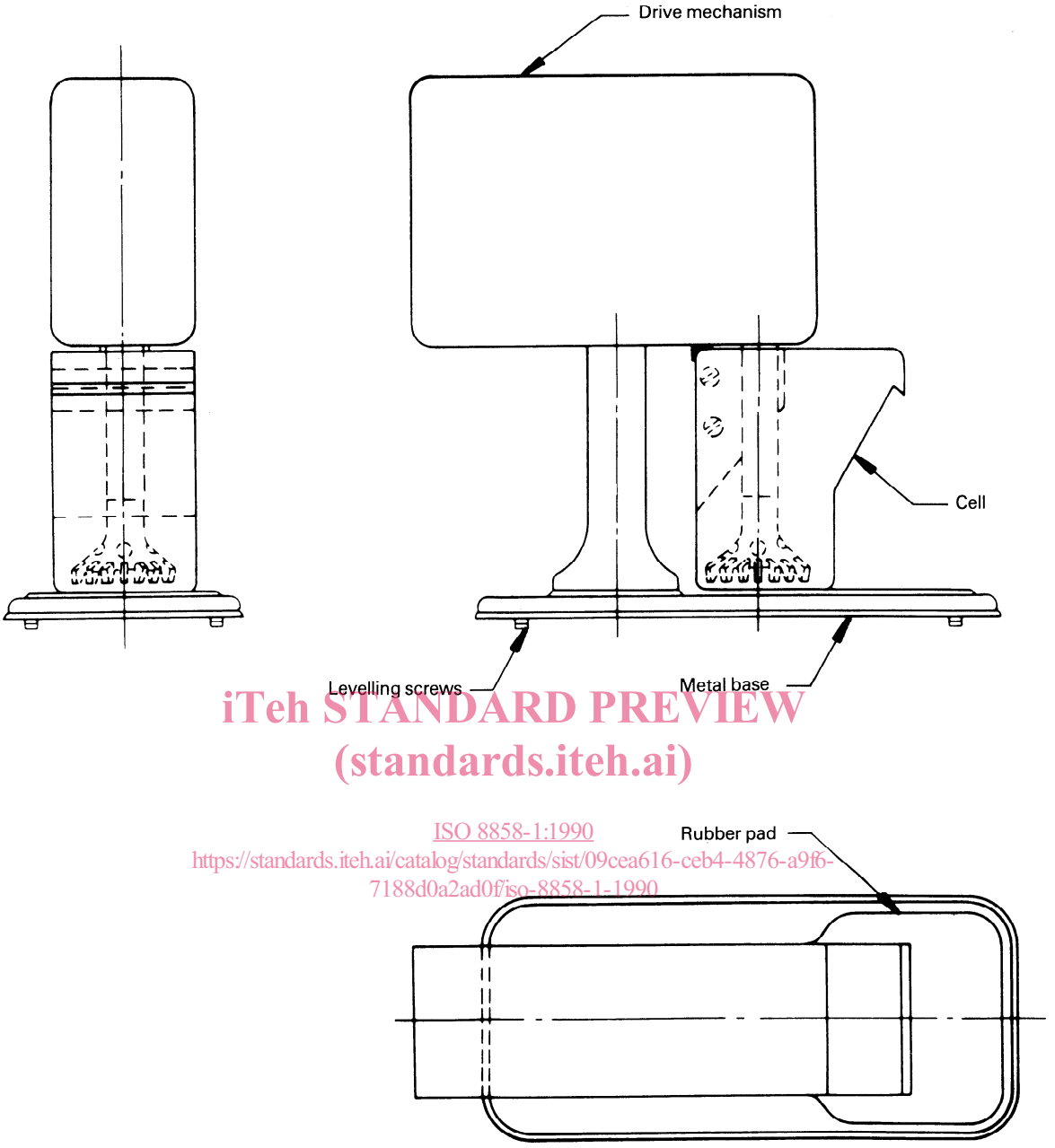

Figure 1 — Testing machine