INTERNATIONAL STANDARD

ISO 8866

First edition
1991-05-15

Rotary core diamond drilling equipment — System C

Matériel de forage rotatif au diamant avec carottage — Système C

Reference number
ISO 8866:1991(E)

Foreword

ISO (the International Organization for Standardization) is a worldwide federation of national standards bodies (ISO member bodies). The work of preparing International Standards is normally carried out through ISO technical committees. Each member body interested in a subject for which a technical committee has been established has the right to be represented on that committee. International organizations, governmental and non-governmental, in liaison with ISO, also take part in the work. ISO collaborates closely with the International Electrotechnical Commission (IEC) on all matters of electrotechnical standardization.

Draft International Standards adopted by the technical committees are circulated to the member bodies for voting. Publication as an International Standard requires approval by at least 75 % of the member bodies casting a vote.

International Standard ISO 8866 was prepared by Technical Committee ISO/TC 82, *Mining*.

Annex A of this International Standard is for information only.

International Organization for Standardization
Case Postale 56 • CH-1211 Genève 20 • Switzerland

Printed in Switzerland

Introduction

System C is characterized by a series of nesting hole sizes providing small clearances between the hole wall and the equipment, making it possible to use thin-walled casing tubes. The equipment specified in this International Standard should be considered a separate system intended to be applied in parallel with system A (see ISO 3551) and system B (see ISO 3552): it is not interchangeable with these systems.

This page intentionally left blank

Rotary core diamond drilling equipment — System C

1 Scope

This International Standard specifies the material for and the dimensions of rotary core diamond drilling equipment, system C.

NOTE 1 Cutting materials other than diamond may be used.

It applies to

— single- and double-tube core barrels, including diamond core bits, reaming shells, core lifters, core-lifter cases, core tubes (outer and inner) and heads;

— drill rods and couplings;

— casing tubes and couplings.

The casing tubes are not designed for drilling, and the casing string is only employed for casing-off the hole.

The range of equipment covers diamond core drilling of holes from 35 mm to 112 mm in diameter (outer bit diameter) with the corresponding core diameters from 21 mm to 92 mm.

Single- and double-tube core barrels provide a means of coring compact rocks (types M and DM core barrels), fissured and fractured rocks (types T and DT core barrels) and fractured and broken-down rocks (type DP core barrels).

2 Designation

The designation of items complying with this International Standard comprises

— the name of the item;

— the letter(s) identifying the core barrel type (not applicable to drill rods and coupling, casing tubes and casing couplings);

— the nominal outside diameter of the item;

— the letter C (denoting system C).

EXAMPLES

Reaming shell DT59C

Drill rod 54C

3 Material

The equipment shall be manufactured from materials which, in the manufactured items, provide mechanical properties not less than those given in table 1.

Table 1 — Minimum mechanical properties of the material

Item	Tensile strength R_m N/mm² (MPa)	Yield stress R_e N/mm² (MPa)	Percentage elongation after fracture $5{,}65\sqrt{S_0}$ %
Drill rods (upset ends)	690	490	12
Drill rod coupling	765	590	14
Casing and core tubes, outside diameter ⩽ 89 mm	690	490	12
Casing and core tubes, outside diameter > 89 mm	640	370	16
Other items	Not specified		

4 Dimensions and tolerances

The main dimensions of system C equipment are given in table 2. Other dimensions and tolerances are given in figure 3 to figure 44. Tube ovality should be kept within outer diameter tolerances.

The maximum deviation from straightness should not exceed

1:2 000 of the tube length, for drill rods and core tubes of outer diameter ⩽ 73 mm

1:1 200 of the tube length, for casing tubes and core tubes of outer diameter > 73 mm

The curvature over 250 mm of each drill rod and core tube ends should not exceed 0,5 mm. See figure 1.

All dimensions are given in millimetres.

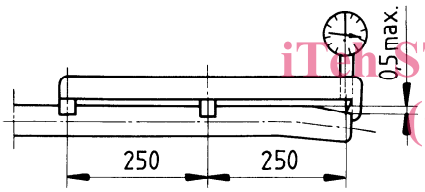

Figure 1 — Measuring tube end curvature

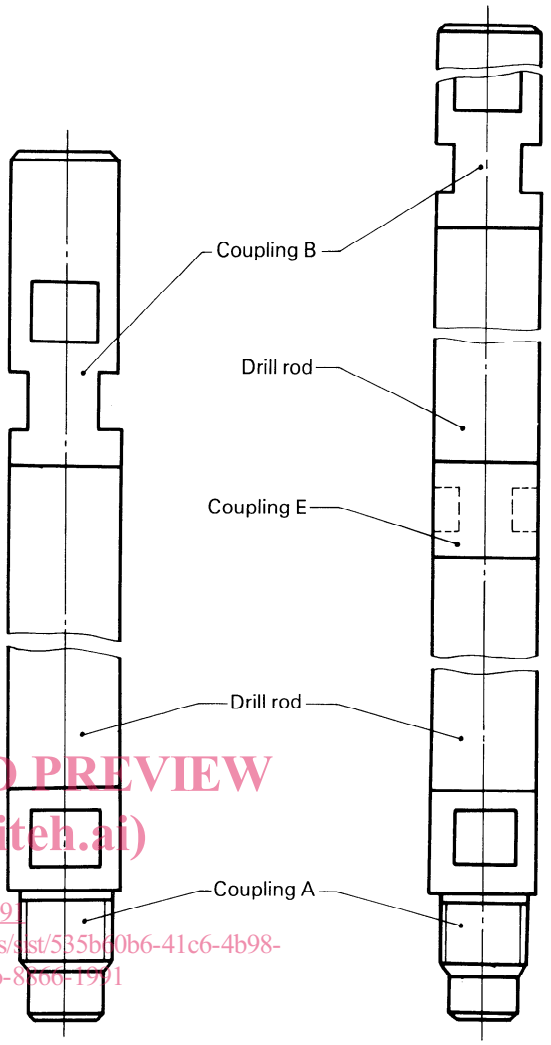

Figure 2 — Drill rod and coupling

Table 2 — Main dimensions for system C equipment

Item	Main dimensions of the equipment for hole diameter					
	35	46	59	76	93	112
Reaming shell, D_x	35,4	46,4	59,4	76,4	93,4	112,4
Single-tube core barrel, type M						
Core bit, $D_x \times D_y$	35 × 24	46 × 34	59 × 45	76 × 60,5	—	
Core barrel, $D_0 \times t$	33,5 × 3	44 × 3,5	57 × 4	73 × 4	—	—
Single-tube core barrel, type T						
Core bit, $D_x \times D_y$	35 × 21	46 × 31	59 × 42	76 × 58	93 × 73	112 × 92
Core barrel, $D_0 \times t$	33,5 × 3	44 × 3,5	57 × 4	73 × 4	89 × 4,5	108 × 4,5
Double-tube core barrel, type DM						
Core bit, $D_x \times D_y$	—	46 × 34	59 × 45	76 × 60,5	—	—
Outer core tube, $D_0 \times t$	—	45 × 2,5	57 × 2,5	73 × 3	—	—
Inner core tube, $D_0 \times t$	—	38 × 1	50 × 1,2	65 × 1,5	—	—
Double-tube core barrel, type DT						
Core bit, $D_x \times D_y$	—	46 × 31	59 × 42	76 × 58	93 × 73	—
Outer core tube, $D_0 \times t$	—	44 × 3,5	57 × 3,5	73 × 3,5	89 × 3,5	—
Inner core tube, $D_0 \times t$	—	35 × 1,2	48 × 2	63 × 1,5	80 × 2	—
Double-tube core barrel, type DP						
Core bit, $D_x \times D_y$	—	—	59 × 35,4	76 × 48	93 × 66	112 × 85
Outer core tube, $D_0 \times t$	—	—	57 × 3,5	73 × 3,5	89 × 3,5	108 × 4,5
Inner core tube, $D_0 \times t$	—	—	45 × 3	60 × 3	75 × 3	95 × 3
Drill rods						
Drill rod, D_0	32	42	54	68		
Casing and casing couplings						
Flush-jointed casing, $D_0 \times t$	44 × 3,5	57 × 4,5	73 × 5	89 × 5	—	—
Flush-coupling casing, $D_0 \times t$	—	—	73 × 4	89 × 4,5	108 × 4,5	127 × 5; 146 × 5
Casing coupling, $D_0 \times d$	—	—	73 × 62	89 × 78	108 × 95,5	127 × 114,5; 146 × 134

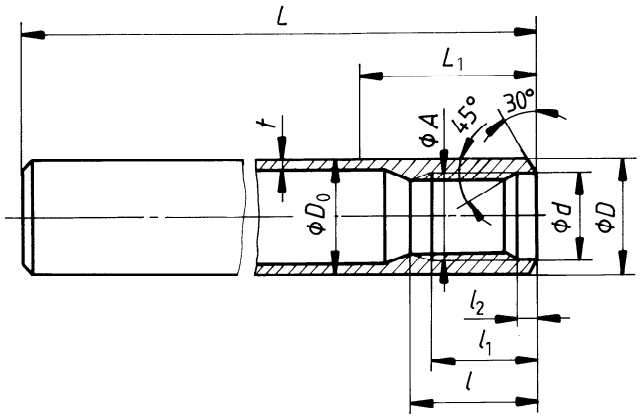

Dimensions		32C	42C	54C	68C
D_0		32 ± 0,15	42 ± 0,2	54 ± 0,25	68 ± 0,3
t	$^{+0,75}_{0}$	4,5	4,5	4,5	4,5
D	h13	1)	42,5	54,5	68,5
d 2)	H12	27	33,5	42,5	55,5
l	min.	45	60	65	70
l_1	min.	35	50	55	60
l_2	$^{+0,5}_{0}$	8	10	10	10
L	±10	3 000	3 000; 4 500	3 000; 4 500	3 000; 4 500
L_1	min.	1)	65	70	80
Thread,3) $A \times P$ (see figure 43)		26,5 × 6	33 × 8	42 × 8	55 × 8

1) Drill rod with plain ends.

2) The thread direction is at the manufacturer's option. d may be equal to A.

3) The thread of the rod may be right-handed or left-handed.

Figure 3 — Drill rod

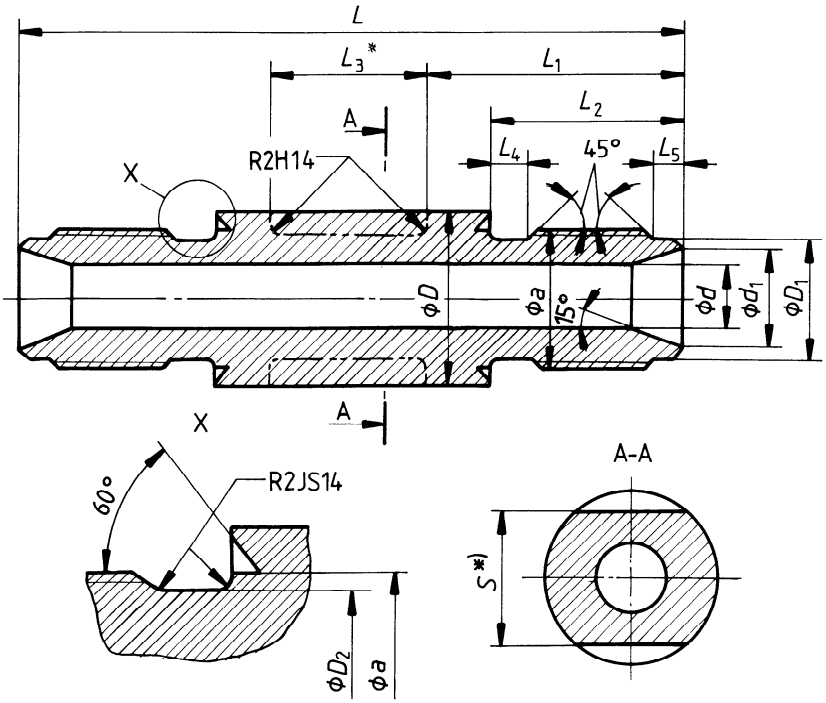

*) The drill-rod coupling may have cuts for wrenching or have a smooth outer surface.

Dimensions		32C	42C	54C	68C
D	h14	32,5	42,5	54,5	68,5
D_1	h12	23,65	29,65	37,6	50
D_2	h11	23,5	29,5	37,5	50
d	H14	12	16	22	30
d_1	JS14	15	20	28	40
L	js14	125	160	180	215
L_1	js14	45	60	70	85
L_2	h14	35	50	58	65
L_3	JS14	35	40	40	45
L_4	JS14	8	10	10	10
L_5	JS14	4	5	5	5
S	h14	24	30	36	46
Thread,[1] $a \times P$ (see figure 43)		26,5 × 6	33 × 8	42 × 8	55 × 8

1) The thread may be right-handed or left-handed. The thread direction is at the user's option.

Figure 4 — Drill-rod coupling, type E

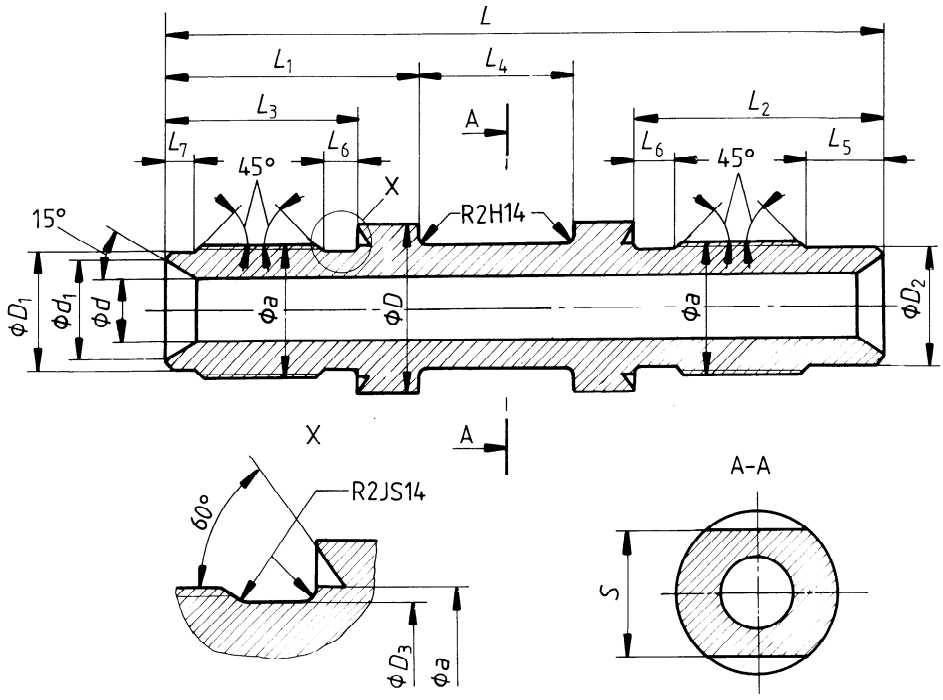

Dimensions		32C	42C	54C	68C
D	h14	32,5	42,5	54,5	68,5
D_1	h12	23,65	29,65	37,6	50
D_2	h10	23,65	29,65	37,6	50
D_3	h11	23,5	29,5	37,5	50
d	H14	12	16	22	30
d_1	JS14	15	20	28	40
L	js14	135	176	200	230
L_1	js14	45	60	70	85
L_2	h14	45	65	77	85
L_3	h14	35	50	58	65
L_4	JS14	35	40	40	45
L_5	JS14	15	20	24	25
L_6	JS14	8	10	10	10
L_7	JS14	4	5	5	5
S	h14	24	30	36	46
Thread,[1] $a \times P$ (see figure 43)		26,5 × 6	33 × 8	42 × 8	55 × 8

1) The thread may be right-handed or left-handed. The thread direction is at the user's option.

Figure 5 — Drill-rod coupling, type A

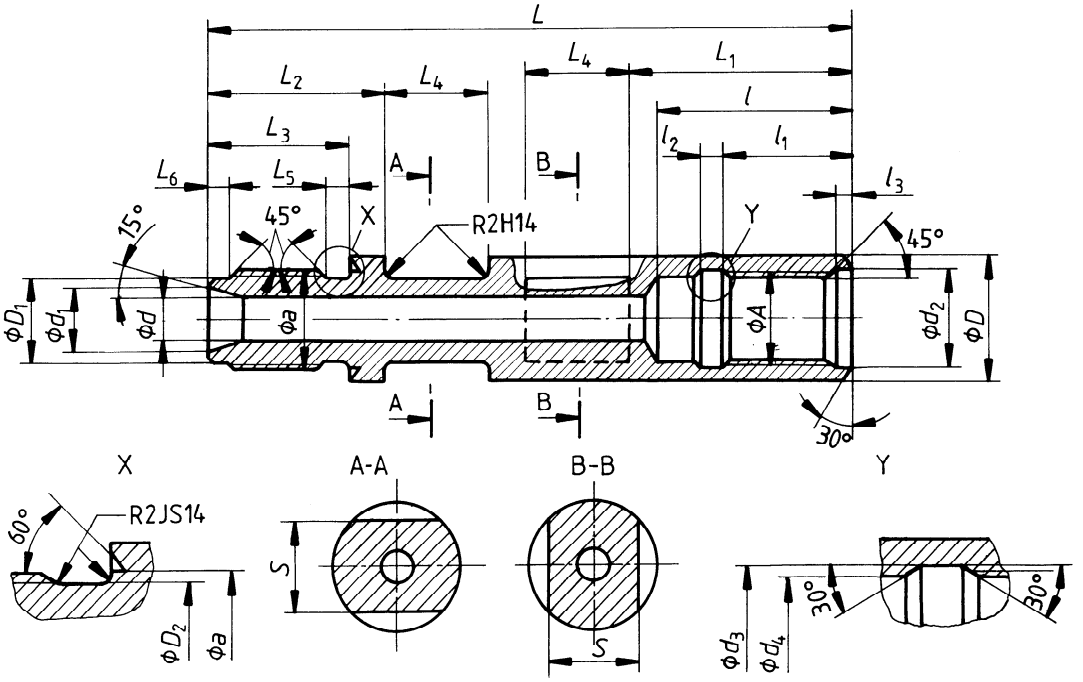

Dimensions		32C	42C	54C	68C
D	h14	32,5	42,5	54,5	68,5
D_1	h12	23,65	29,65	37,6	50
D_2	h11	23,5	29,5	37,5	50
d	H14	12	16	22	30
d_1	JS14	15	20	28	40
d_2	H12	27	33,5	42,5	55,5
d_3	H12	27	33,5	42,5	55,5
d_4	H10	24	30	38	50,5
L	js14	185	235	260	295
L_1	js14	60	80	95	105
L_2	JS14	45	60	70	85
L_3	h14	35	50	58	65
L_4	JS14	35	40	40	45
L_5	JS14	8	10	10	10
L_6	JS14	4	5	5	5

Dimensions	32C	42C	54C	68C
l H14	48	70	82	90
l_1 JS14	30	45	50	56
l_2 JS14	8	10	10	10
l_3 JS14	8	10	10	10
S h14	24	30	36	46
Thread,[1] $a \times P$ and $A \times P$ (see figure 43)	26,5 × 6	33 × 8	42 × 8	55 × 8

1) The thread may be right-handed or left-handed. The thread direction is at the user's option.

Figure 6 — Drill-rod coupling, type B

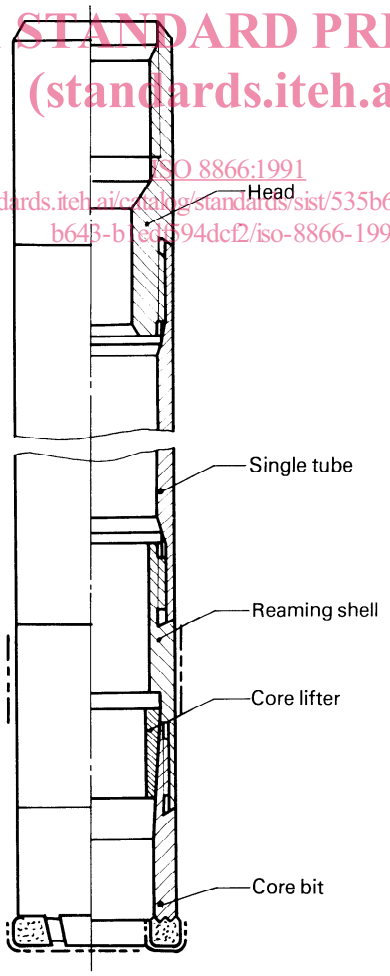

Figure 7 — Assembly of single-tube core barrel, M and T types

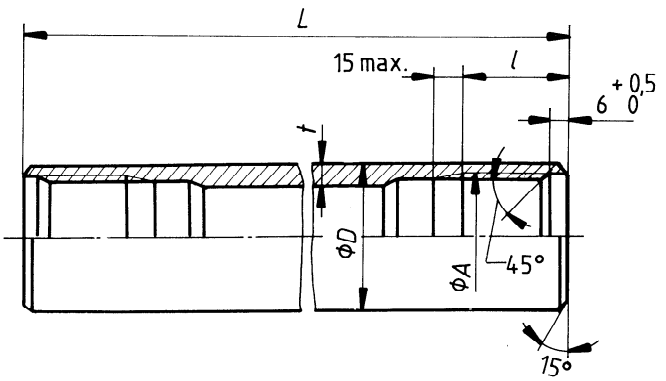

Dimensions	T(M)33,5C	T(M)44C	T(M)57C	T(M)73C	T(M)89C	T(M)108C
D	33,5 ± 0,15	44 ± 0,2	57 ± 0,25	73 ± 0,36	89 ± 0,4	108 ± 0,86
t	3 ± 0,25	3,5 ± 0,25	4 ± 0,32	4 ± 0,32	4,5 ± 0,36	4,5 ± 0,45
L ±70	1 500; 3 000	1 500; 3 000; 4 500	3 000; 4 500; 6 000	3 000; 4 500; 6 000	3 000; 4 500; 6 000	3 000; 4 500; 6 000
l min.	40	40	40	40	40	60
Thread,[1] $A \times P$ (see figure 44)	29,8 × 4	40 × 4	52 × 4	68 × 4	84 × 4	103 × 4

1) The thread may be right-handed or left-handed. The thread direction is at the user's option.

Figure 8 — Single core tube, M and T types

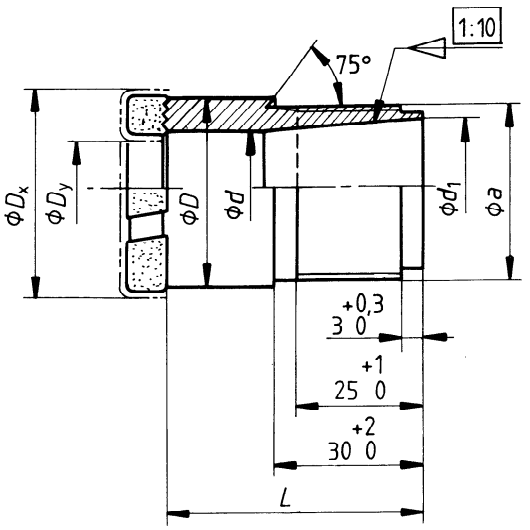

Dimensions	T35C	T46C	T59C	T76C	T93C	T112C
D_x	$35^{+0,2}_{-0,1}$	$46^{+0,2}_{-0,1}$	$59^{+0,2}_{-0,1}$	$76^{+0,2}_{-0,1}$	$93^{+0,3}_{-0,2}$	$112^{+0,3}_{-0,2}$
D_y	$21^{+0,2}_{-0,1}$	$31^{+0,2}_{-0,1}$	$42^{+0,2}_{-0,1}$	$58^{+0,2}_{-0,1}$	$73^{+0,3}_{-0,2}$	$92^{+0,3}_{-0,2}$
D h12	34	45	58	74	90	109
d H12	22,5	33	44	60	76	95
d_1 H10	27	36	48,5	64	80	98
L js14	55	55	55	55	65	65
Thread, $a \times P$ (see figure 44)	29,8 × 4	40 × 4	52 × 4	68 × 4	84 × 4	103 × 4

Figure 9 — Core bit, type T

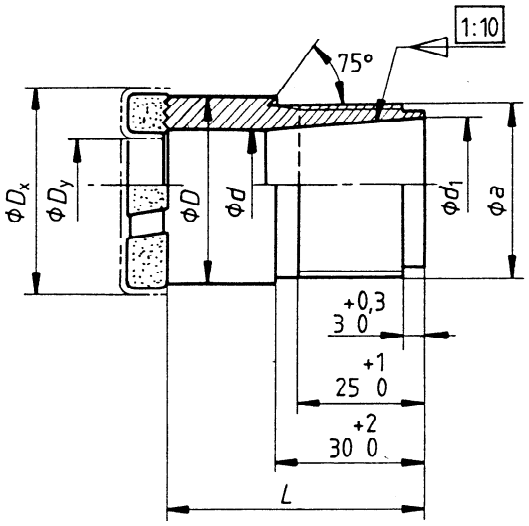

Dimensions		M(DM)35C	M(DM)46C	M(DM)59C	M(DM)76C
D_x	$^{+0,2}_{-0,1}$	35	46	59	76
D_y	$^{+0,2}_{-0,1}$	24	34	45	60,5
D	h12	34	45	58	73
d	H12	25	35	46	62
d_1	H10	27	36	48,5	64
L	js14	55	55	55	55
Thread, $a \times P$ (see figure 44)		29,8 × 4	40 × 4	52 × 4	68 × 4

Figure 10 — Core bit, type M(DM) (employed in double-tube core barrel assemblies, type DM)