SLOVENSKI STANDARD
SIST EN 3243:2004

01-maj-2004

Aerospace series - Pipe coupling 8°30' in titanium alloy - Ferrules, welded, with dynamic beam seal end

Aerospace series - Pipe coupling 8°30' in titanium alloy - Ferrules, welded, with dynamic beam seal end

Luft- und Raumfahrt - Rohrverschraubung 8°30' aus Titanlegierung - Anschweißstutzen mit Dichtlippe

Série aérospatiale - Systeme de raccordement 8°30' en alliage de titane - Olives a souder avec joint a levre

Ta slovenski standard je istoveten z: EN 3243:2001

ICS:

49.080	Letalski in vesoljski hidravliļ ni sistemi in deli	Aerospace fluid systems and components

SIST EN 3243:2004 **en**

EUROPEAN STANDARD

NORME EUROPÉENNE

EUROPÄISCHE NORM

EN 3243

October 2001

ICS 49.080

English version

Aerospace series - Pipe coupling 8°30' in titanium alloy - Ferrule, welded, with dynamic beam seal end

Série aérospatiale - Système de raccordement 8°30' en alliage de titane - Olive soudée avec joint à lèvre

Luft- und Raumfahrt - Rohrverschraubung 8°30' aus Titanlegierung - Anschweißstutzen mit Dichtlippe

This European Standard was approved by CEN on 6 January 2001.

CEN members are bound to comply with the CEN/CENELEC Internal Regulations which stipulate the conditions for giving this European Standard the status of a national standard without any alteration. Up-to-date lists and bibliographical references concerning such national standards may be obtained on application to the Management Centre or to any CEN member.

This European Standard exists in three official versions (English, French, German). A version in any other language made by translation under the responsibility of a CEN member into its own language and notified to the Management Centre has the same status as the official versions.

CEN members are the national standards bodies of Austria, Belgium, Czech Republic, Denmark, Finland, France, Germany, Greece, Iceland, Ireland, Italy, Luxembourg, Netherlands, Norway, Portugal, Spain, Sweden, Switzerland and United Kingdom.

EUROPEAN COMMITTEE FOR STANDARDIZATION
COMITÉ EUROPÉEN DE NORMALISATION
EUROPÄISCHES KOMITEE FÜR NORMUNG

Management Centre: rue de Stassart, 36 B-1050 Brussels

Ref. No. EN 3243:2001 E

Foreword

This European Standard has been prepared by the European Association of Aerospace Manufacturers (AECMA).

After inquiries and votes carried out in accordance with the rules of this Association, this Standard has received the approval of the National Associations and the Official Services of the member countries of AECMA, prior to its presentation to CEN.

This European Standard shall be given the status of a national standard, either by publication of an identical text or by endorsement, at the latest by April 2002, and conflicting national standards shall be withdrawn at the latest by April 2002.

According to the CEN/CENELEC Internal Regulations, the national standards organizations of the following countries are bound to implement this European Standard: Austria, Belgium, Czech Republic, Denmark, Finland, France, Germany, Greece, Iceland, Ireland, Italy, Luxembourg, Netherlands, Norway, Portugal, Spain, Sweden, Switzerland and the United Kingdom.

1 Scope

This standard specifies the characteristics of welded ferrules with dynamic beam seal end for pipe couplings 8°30', in titanium alloy, for aerospace applications.

Nominal pressure: up to 28 000 kPa

Temperature range: – 55 °C to 135 °C

2 Normative references

This European Standard incorporates by dated or undated reference provisions from other publications. These normative references are cited at the appropriate places in the text and the publications are listed hereafter. For dated references, subsequent amendments to or revisions of any of these publications apply to this European Standard only when incorporated in it by amendment or revision. For undated references, the latest edition of the publication referred to applies (including amendments).

EN 2424 Aerospace series – Marking of aerospace products

EN 2656 Aerospace series – Pipe coupling – Coupling ends, welded – Geometric configuration

EN 3272 Aerospace series – Pipe coupling 8°30' – Dynamic beam seal end for ferrules, welded – Geometric configuration

EN 3275 Aerospace series – Pipe coupling 8°30' up to 28 000 kPa – Dynamic beam seal – Metric series – Technical specification

EN 3311 Aerospace series – Titanium alloy TI-P64001 – Annealed – Bar for machining – $D \leq 150$ mm[1)]

EN 3314 Aerospace series – Titanium alloy TI-P64001 – Solution treated and aged – Bar for machining – $D \leq 75$ mm[1)]

[1)] Published as AECMA Prestandard at the date of publication of this standard

3 Required characteristics

3.1 Configuration – Dimensions – Mass

According to figure 1 and table 1

Dimensions not specified are at the manufacturer's option provided that the qualification and acceptance requirements of EN 3275, type II are met.

3.2 Surface roughness

According to figure 1, unless otherwise specified in the design documentation.

3.3 Materials

According to EN 3311 or EN 3314

Dimensions in millimetres

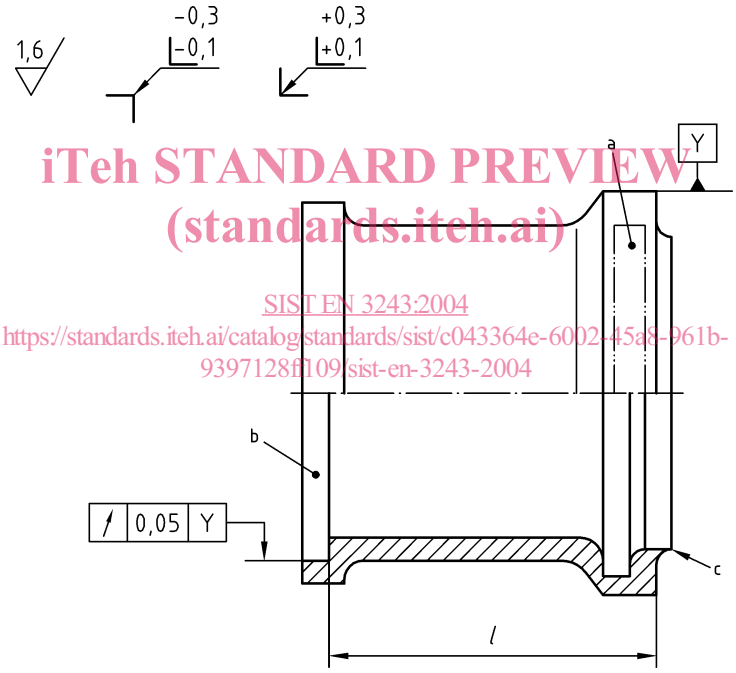

a Area for marking

b According to EN 2656

c According to EN 3272

Figure 1

Table 1

Dimensions in millimetres

Code [a b]	*l* 0 -0,2	Mass g/piece max.	Code [a b]	*l* 0 -0,2	Mass g/piece max.	Code [a b]	*l* 0 -0,2	Mass g/piece max.
0504	18	1,08	**1805**	22	5,35	**2816**	29	22,21
0505		1,17	**1807**		6,26	**2820**		25,72
0605	17	1,57	**1810**		7,55	**3210**	30	18,73
0805	17	1,98	**1813**		8,78	**3212**		20,96
0806		2,12	**2006**	24	8,52			
1005	17	2,44	**2007**		9,08			
1008		2,98	**2012**		11,70			
1205	18	3,05	**2015**		13,21			
1206		3,29	**2208**	26	10,56			
1209		3,98	**2212**		13,11			
1405	20	3,69	**2216**		15,56			
1408		4,63	**2508**	29	13,36			
1410		5,21	**2509**		14,19			
1605	22	4,73	**2514**		18,27			
1606		5,14	**2518**		21,42			
1610		6,68	**2808**	29	14,85			
1612		7,42	**2810**		16,71			

[a] Corresponds to the pipe nominal outside diameter and wall thickness

[b] Relationship between code and pressure classification according to EN 2656 and/or EN 3272

4 Designation

EXAMPLE:

Description block	**Identity block**
FERRULE, WELDED	**EN3243–0806**

Number of this standard

Code (see table 1)

NOTE: If necessary, the code I9005 shall be placed between the description block and the identity block.

5 Marking

According to EN 2424, style F plus manufacturing date or batch number and figure 1.

According to EN 2424, style G.

6 Technical specification

According to EN 3275, type II