SLOVENSKI STANDARD
SIST EN 2585:2001

01-januar-2001

Aerospace series - Bearings, spherical plain in corrosion resisting steel with self-lubricating liner - Wide series - Elevated loads at ambient temperature - Dimensions and loads

Aerospace series - Bearings, spherical plain in corrosion resisting steel with self-lubricating liner - Wide series - Elevated loads at ambient temperature - Dimensions and loads

Luft- und Raumfahrt - Gelenklager aus korrosionsbeständigem Stahl mit selbstschmierender Beschichtung - Breite Reihe - Hohe Belastungen bei Raumtemperatur - Maße und Belastungen

Série aérospatiale - Rotules en acier résistant a la corrosion a garniture autolubrifiante - Série large a charge élevée a température ambiante - Dimensions et charges

Ta slovenski standard je istoveten z: **EN 2585:1992**

ICS:

49.035	Sestavni deli za letalsko in vesoljsko gradnjo	Components for aerospace construction

SIST EN 2585:2001 **en**

EUROPEAN STANDARD

NORME EUROPÉENNE

EUROPÄISCHE NORM

EN 2585:1992

May 1992

UDC 629.7.02:621.822.3-408.2-72.004.1:669.14.018.89

Descriptors: Aircraft industry, spherical bearings, corrosion resisting steel, self-lubricating parts, dimensions, loads

English version

Aerospace series - Bearings, spherical plain in corrosion resisting steel with self-lubricating liner - Wide series - Elevated loads at ambient temperature - Dimensions and loads

Série aérospatiale - Rotules en acier résistant à la corrosion à garniture autolubrifiante - Série large à charge élevée à température ambiante - Dimensions et charges

Luft- und Raumfahrt - Gelenklager aus korrosionsbeständigem Stahl mit selbstschmierender Beschichtung - Breite Reihe - Hohe Belastungen bei Raumtemperatur - Maße und Belastungen

This European Standard was approved by CEN on 1992-05-11. CEN members are bound to comply with the CEN/CENELEC Internal Regulations which stipulate the conditions for giving this European Standard the status of a national standard without any alteration.

Up-to-date lists and bibliographical references concerning such national standards may be obtained on application to the Central Secretariat or to any CEN member.

This European Standard exists in three official versions (English, French, German). A version in any other language made by translation under the responsibility of a CEN member into its own language and notified to the Central Secretariat has the same status as the official versions.

CEN members are the national standards bodies of Austria, Belgium, Denmark, Finland, France, Germany, Greece, Iceland, Ireland, Italy, Luxembourg, Netherlands, Norway, Portugal, Spain, Sweden, Switzerland and United Kingdom.

CEN

European Committee for Standardization
Comité Européen de Normalisation
Europäisches Komitee für Normung

Central Secretariat: rue de Stassart,36 B-1050 Brussels

Foreword

This European Standard has been prepared by the European Association of Aerospace Manufacturers (AECMA).

After inquiries and votes carried out in accordance with the rules of this Association, this Standard has successively received the approval of the National Associations and the Official Services of the member countries of AECMA, prior to its presentation to CEN.

According to the Common CEN/CENELEC Rules, the following countries are bound to implement this European Standard:
Austria, Belgium, Denmark, Finland, France, Germany, Greece, Iceland, Ireland, Italy, Luxembourg, Netherlands, Norway, Portugal, Spain, Sweden, Switzerland and United Kingdom.

1 Scope and field of application

This standard specifies the characteristics of spherical plain bearings in corrosion resisting steel, with self-lubricating liner, wide series, for elevated loads at ambient temperature.

They are intended for use in fixed or moving parts of the aircraft structure and control mechanisms.

They shall be used in the temperature range − 55 °C to + 163 °C.

2 Normative References

ISO 1132	Rolling bearings - Tolerances - Definitions
EN 2030	Steel FE-PM43 - Hardened and tempered - Bars D ⩽ 150 mm - Aerospace series [1]
EN 2132	Electrodeposition of chromium for engineering purposes - Aerospace series [1]
EN 2539	Aerospace series - Steel FE-PM61 - Solution annealed and precipitation hardened - R_m ⩾ 960 MPa - Bars D_e ⩽ 120 mm [2]
EN 2755	Aerospace series - Bearings, spherical plain in corrosion resisting steel with self-lubricating liner - Elevated loads at ambient temperature - Technical specification [3].

3 Symbols

The definitions of tolerances and clearances are given in ISO 1132.

Δ_{ds} = the deviation of a single bore diameter

Δ_{Ds} = the deviation of a single outside diameter

Δ_{dmp} = single plane mean bore diameter deviation

Δ_{Dmp} = single plane mean outside diameter deviation

α = maximum angle of tilt of the outer ring with respect to the inner ring, the spherical surface of the outer ring being completely in contact with the inner ring.

4 Required characteristics

4.1 Configuration - Dimensions - Tolerances - Mass

See figures 1 and 2 and table 1.

4.2 Surface roughness

See figures 1 and 2.

4.3 Materials

Inner ring : Steel EN 2030, Hardness 55 ⩽ HRC ⩽ 62
Outer ring : Steel EN 2539, Hardness 28 ⩽ HRC ⩽ 37 before swaging
Liner : Self-lubricating low friction wear resistant material consistent with the requirements of EN 2755.

4.4 Surface treatment

If specified in designation, chromium plating EN 2132, thickness 15 µm to 50 µm on the spherical surface of the inner ring.

---

1) Published as AECMA standard at the date of publication of the present standard
2) Published as AECMA pre-standard at the date of publication of the present standard.
3) In preparation at the date of publication of the present standard.

3,2 (0,2 , 0,8)

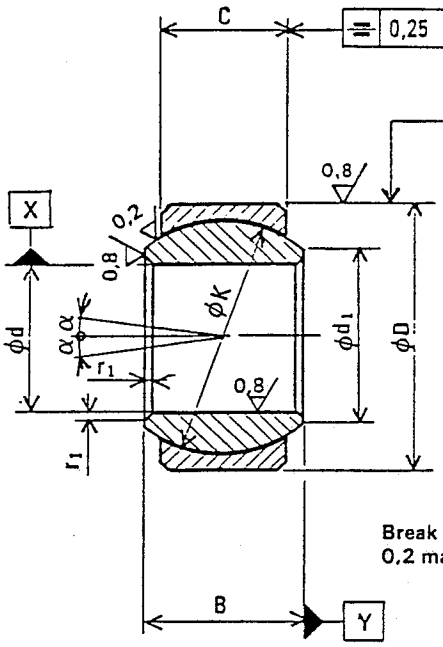

Without swaging grooves - Code S

Figure 1

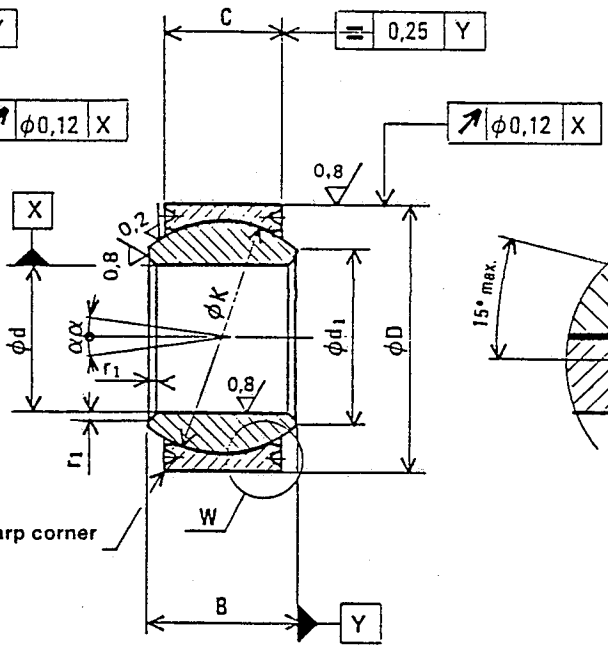

With swaging grooves - Code R

Figure 2

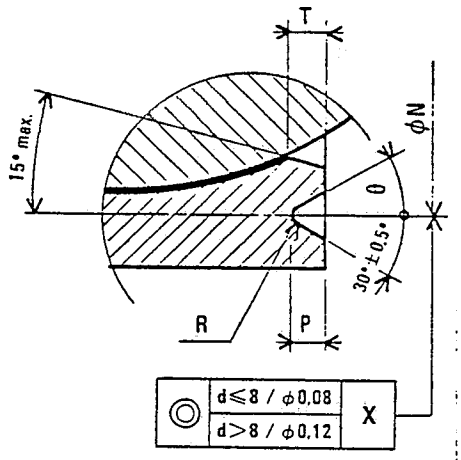

Detail W

Table 1

Dimensions in millimetres

d Code	d Nom.	B 0 −0,06	C ±0,1	D	Tolerances μm Δdmp	Δds	Δdmp	Δds	d_1 1) min.	K ≈	N +0,1 0	P 0 −0,2	R +0,1 0	r	r_1	T max.	θ in degrees ±0,5°	α in degrees min.	Mass ≈ g/piece
05	5	11,0	8,5	16	0 −8	+ 5 −13	0 −8	+ 2 −10	7,7	13,5	14,2	0,7	0,2	0,8 0 −0,3	0,1 to 0,4	0,8	20	15	16
06	6																		
08	8		8,0	18					10,3	15,1	16,2							14	17
10	10	12,5	10,0	21	0 −9	+ 6 −15			12,2	17,5	18,4	0,9	0,3			0,9	30	10	27
12	12	16,0	13,0	26				+ 3 −11	15,5	22,3	23,4								49
15	15	17,0	13,5	29					18,9	25,5	26,4					1,0		9	62
17	17	18,0	14,5	30					20,1	27,5	27,4								69
20	20	20,0	16,0	35	0 −11	+ 8 −19	0 −10	+ 3 −13	23,5	31,8	31,8	1,4				1,2		8	104
25	25	32,0	26,0	54	0 −13	+10 −23			35,3	47,7	50,8			1,0 0 −0,4				9	445
30	30	34,0	28,0	60					40,9	53,2	56,8			1,2 0 −0,4				8	480
35	35	36,0	29,0	65			0 −12	+ 3 −15	45,5	58,1	61,8					1,5			565
40	40	38,0	31,0	68					47,0	60,5	64,8								600
45	45	41,0	33,0	76					54,1	67,9	72,8								800
50	50	44,0	35,0	82	0 −15	+13 −28			60,3	74,7	78,8								970
55	55	52,0	40,0	96					63,4	82,0	92,8	1,5						10	1580

1) Attention should be paid to the possible indentation of the support mountings by the inner ring bearing faces.

4.5 Loads and starting torque values

See table 2.

Table 2

d	Permissible static loads kN		Permissible dynamic radial loads 25 000 cycles kN	Starting torques N.m
Nominal mm	Radial C_s	Axial 1) C_a		
5	42,6	7,2	25,6	0,08 to 0,50
6	42,6	7,2	25,6	
8	45,7	6,4	27,4	0,12 to 0,80
10	68,7	11,7	41,2	
12	116,4	21,5	64,0	
15	139,0	24,1	76,5	
17	159,1	29,0	87,5	
20	207,5	36,0	113,9	
25	496,6	93,2	248,3	0,25 to 1,00
30	587,5	109,6	293,7	0,40 to 2,00
35	666,0	117,6	333,0	
40	745,6	136,6	372,8	0,60 to 3,50
45	895,9	155,6	447,9	
50	1024,7	176,2	512,3	
55	1298,7	221,2	649,3	

1) These values apply to bearings without swaging groove. For bearings with swaging grooves, the push-out loads may be smaller than these values.

5 Designation

Example :

Description block	Identity block
BEARING	EN2585S06P

Number of EN standard

Code for type without swaging grooves (See figures 1 and 2)

Code diameter d (See table 1)

Only when chromium plating is required

NOTE : If necessary, the originator code I9005 may be introduced between the description block and the identity block.

6 Marking

In addition to the manufacturer's own marking, each spherical plain bearing shall be marked, using the identity block as defined in clause 5 of this standard.

Marking position and method are at the manufacturer's option.

7 Technical specification

EN 2755.