SLOVENSKI STANDARD
SIST EN 2753:2001

01-januar-2001

Aerospace series - Nuts, anchor, self-locking, fixed, single lug, with counterbore, in alloy steel, cadmium plated, MoS2 lubricated - Classification: 1 100 MPa (at ambient temperature)/235 °C

Aerospace series - Nuts, anchor, self-locking, fixed, single lug, with counterbore, in alloy steel, cadmium plated, MoS2 lubricated - Classification: 1 100 MPa (at ambient temperature)/235 °C

Luft- und Raumfahrt - Annietmuttern, selbstsichernd, einseitiger Flansch, mit zylindrischer Aussenkung, aus legiertem Stahl, verkadmet, MoS2-geschmiert - Klasse: 1 100 MPa (bei Raumtemperatur)/235°C

Série aérospatiale - Ecrous a river, a freinage interne, fixes, simple patte, avec chambrage, en acier allié, cadmiés, lubrifiés MoS2 - Classification: 1100 MPa (a température ambiante)/235°C

Ta slovenski standard je istoveten z: EN 2753:1996

ICS:

49.030.30 Matice Nuts

SIST EN 2753:2001 en

EUROPEAN STANDARD

NORME EUROPÉENNE

EUROPÄISCHE NORM

EN 2753

July 1996

ICS 49.040.20

Descriptors: aircraft industry, nut, fastener, anchor nut, self-locking nut, alloy steel, coating, cadmium, classification, dimension, dimensional tolerance, surface treatment, screw thread, designation, marking

English version

Aerospace series - Nuts, anchor, self-locking, fixed, single lug, with counterbore, in alloy steel, cadmium plated, MoS_2 lubricated - Classification : 1 100 MPa (at ambient temperature)/235 °C

Série aérospatiale - Ecrous à river, à freinage interne, fixes, simple patte, avec chambrage, en acier allié, cadmiés, lubrifiés MoS_2 - Classification : 1 100 MPa (à température ambiante)/235 °C

Luft- und Raumfahrt - Annietmuttern, selbstsichernd, einseitiger Flansch, mit zylindrischer Aussenkung, aus legiertem Stahl, verkadmet, MoS_2-geschmiert - Klasse : 1 100 MPa (bei Raumtemperatur)/235 °C

This European Standard was approved by CEN on 1995-04-13. CEN members are bound to comply with the CEN/CENELEC Internal Regulations which stipulate the conditions for giving this European Standard the status of a national standard without any alteration.

Up-to-date lists and bibliographical references concerning such national standards may be obtained on application to the Central Secretariat or to any CEN member.

The European Standards exist in three official versions (English, French, German). A version in any other language made by translation under the responsibility of a CEN member into its own language and notified to the Central Secretariat has the same status as the official versions.

CEN members are the national standards bodies of Austria, Belgium, Denmark, Finland, France, Germany, Greece, Iceland, Ireland, Italy, Luxembourg, Netherlands, Norway, Portugal, Spain, Sweden, Switzerland and United Kingdom.

CEN

European Committee for Standardization
Comité Européen de Normalisation
Europäisches Komitee für Normung

Central Secretariat: rue de Stassart,36 B-1050 Brussels

Ref. No. EN 2753:1996 E

Foreword

This European Standard has been prepared by the European Association of Aerospace Manufacturers (AECMA).

After inquiries and votes carried out in accordance with the rules of this Association, this Standard has received the approval of the National Associations and the Official Services of the member countries of AECMA, prior to its presentation to CEN.

This European Standard shall be given the status of a national standard, either by publication of an identical text or by endorsement, at the latest by January 1997, and conflicting national standards shall be withdrawn at the latest by January 1997.

According to the CEN/CENELEC Internal Regulations, the national standards organizations of the following countries are bound to implement this European Standard: Austria, Belgium, Denmark, Finland, France, Germany, Greece, Iceland, Ireland, Italy, Luxembourg, Netherlands, Norway, Portugal, Spain, Sweden, Switzerland and the United Kingdom.

1 Scope

This standard specifies the characteristics of self-locking, fixed, single lug anchor nuts, with counterbore, in alloy steel, cadmium plated, MoS_2 lubricated.

Classification : 1 100 MPa [1] / 235 °C [2]

2 Normative references

This European Standard incorporates by dated or undated reference provisions from other publications. These normative references are cited at the appropriate places in the text and the publications are listed hereafter. For dated references, subsequent amendments to or revisions of any of these publications apply to this European Standard only when incorporated in it by amendment or revision. For undated references the latest edition of the publication referred to applies.

ISO 3168	Aerospace - Self-locking, fixed, single-lug anchor nuts with counterbore, classification 1 100 MPa / 235 °C
ISO 5855-2	Aerospace - MJ threads - Part 2 : Limit dimensions for bolts and nuts
ISO 5858	Aerospace - Self-locking nuts with maximum operating temperature less than or equal to 425 °C - Procurement specification
ISO 8788	Aerospace - Fasteners - Tolerances of form and position for nuts
EN 2000	Aerospace series - Quality assurance - EN aerospace products - Approval of the quality system of manufacturers
EN 2133	Aerospace series - Cadmium plating of steels, with maximum specified tensile strength equal to or less than 1 450 MPa, copper, copper alloys and nickel alloys [3]
EN 2424	Aerospace series - Marking of aerospace products
EN 2491	Aerospace series - Molybdenum disulphide dry lubricants - Coating methods [3]
EN 3042	Aerospace series - Quality assurance - EN aerospace products - Qualification procedure
TR 3791	Aerospace series - Materials for all metal self-locking nuts and thin wall inserts of temperature classes ≤ 425 °C [4]

1) Corresponds to the minimum tensile stress which the nut is able to withstand at ambient temperature without breaking or cracking when tested with a bolt of a higher strength class.
2) Maximum temperature that the nut is able to withstand, without permanent alteration to its original characteristics, after ambient temperature has been restored. The maximum temperature is conditioned by the cadmium plating.
3) Published as AECMA Standard at the date of publication of this standard
4) Published as AECMA Technical Report at the date of publication of this standard

3 Required characteristics

3.1 Configuration - Dimensions - Masses

See figure 1 and table 1.

Dimensions and tolerances are : in conformity with ISO 3168, expressed in millimetres and apply after cadmium plating but before MoS_2 lubrication.

Details of form not stated are at the manufacturer's option.

The cap shall remain joined (type of attachment at the user's discretion) to the nut at the maximum operating temperature. See test conditions in ISO 5858.

3.2 Tolerances of form and position

ISO 8788

3.3 Materials

TR 3791

3.4 Surface treatments

EN 2133, 5 μm min. on threads and all surfaces which can be contacted by a 20 mm diameter ball. On all other surfaces, a continuous deposit shall be present.

EN 2491, thickness not specified

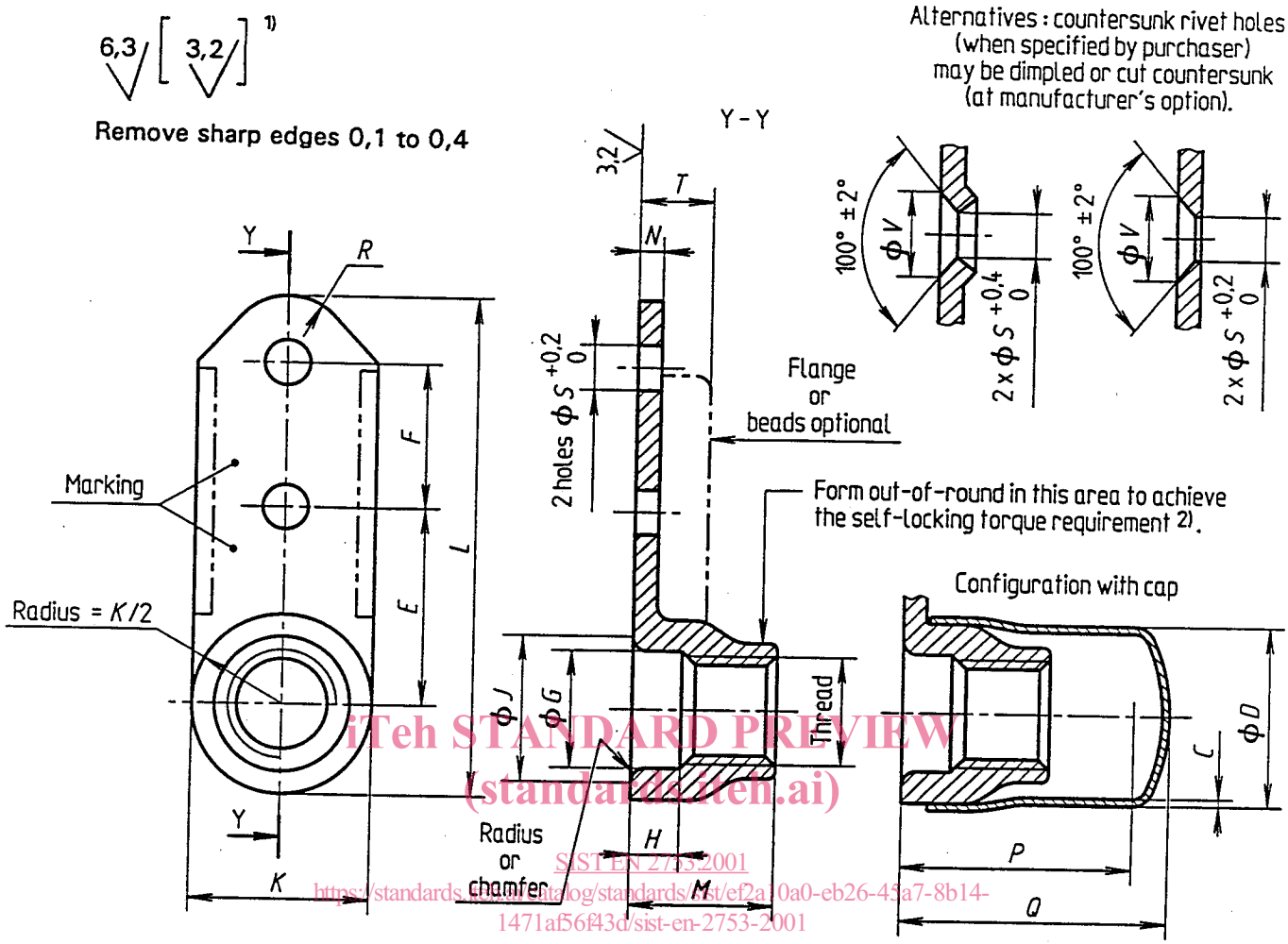

1) These values in micrometres apply before surface treatment. They do not apply to threads, punched holes or sheared edges, the surface texture of which is as achieved by usual manufacturing methods.
2) Tooling marks are permitted in this area.

Figure 1

Table 1

Diameter code	Thread 1)	C max.	D max.	E	F	G min.	H min.	J 2) max.	K max.	L max.	M max.	N 3) max.	P 4) max.	Q max.	R ≈	S	T max.	V ± 0,25	Mass 5)
030	MJ3x0,5-4H6H	—	—	6	6	—	—	4,6	6	17,7	3,2	1,1	—	—	2,5	2,5	1,6	4,8	1,8
040	MJ4x0,7-4H6H	0,4	6,6	8,5	8	4,4	2,2	6,2	8	23,7	5,8		11	13	3		2,9		2,1
050	MJ5x0,8-4H6H		7,9	9,5		5,5	2,4	7,3	9	25,2	6,9		11,4	13,4			3,5		2,9
060	MJ6x1-4H5H		9,2	11		6,5	2,7	8,7	10	27,7	8,1	1,3	12,7	14,7	3,5		4		4
080	MJ8x1-4H5H	0,5	12,8		8,5	8,5		10,9	13	29,7	9,9	1,7	15	18		3	5	5,7	7,5
100	MJ10x1,25-4H5H		15	13		10,5	3	12,9	16,2	34,3	12	1,9	20,2	22	4,5	3,5	6	6,6	11,5

1) In accordance with ISO 5855-2. In self-locking zone the tolerances apply before forming out-of-round.
2) Measured at sharp corners (chamfered) or points of tangency (radiused)
3) Measured at the rivet hole location
4) Maximum protrusion of the bolt
5) Approximate values (kg/1 000 pieces), given for information puposes only. They apply to anchor nuts without cap.

4 Designation

EXAMPLE :

Description block	Identity block
NUT	EN2753–060

Number of this standard

Rivet hole and cap code (see table 2)

Diameter code (see table 1)

NOTE : If necessary, the code I9005 shall be placed between the description block and the identity block.

Table 2

Option	Code
Plain rivet holes	— (hyphen)
Dimpled or countersunk rivet holes	K
Plain rivet holes + cap	B
Dimpled or countersunk rivet holes + cap	A

5 Marking

EN 2424, style N. See figure 1.

6 Technical specification

ISO 5858, except for :

- Approval of manufacturers : see EN 2000 ;
- Qualification of products : see EN 3042.