IEC/PAS 61169-39

Edition 1.0 2008-05

PUBLICLY AVAILABLE SPECIFICATION

PRE-STANDARD

Radio-frequency connectors –
Part 39: Sectional specification for CQM series quick lock RF connectors

Withdrawn
iTeh Standards
(https://standards.iteh.ai)
Document Preview
IEC PAS 61169-39:2008
https://standards.iteh.ai/catalog/standards/iec/c5a0ae51-f12c-4731-a96f-ffcd3a515d7c/iec-pas-61169-39-2008



IEC/PAS 61169-39:2008(E)



THIS PUBLICATION IS COPYRIGHT PROTECTED

Copyright © 2008 IEC, Geneva, Switzerland

All rights reserved. Unless otherwise specified, no part of this publication may be reproduced or utilized in any form or by any means, electronic or mechanical, including photocopying and microfilm, without permission in writing from either IEC or IEC's member National Committee in the country of the requester.

If you have any questions about IEC copyright or have an enquiry about obtaining additional rights to this publication, please contact the address below or your local IEC member National Committee for further information.

IEC Central Office
3, rue de Varembé
CH-1211 Geneva 20
Switzerland
Email: inmail@iec.ch
Web: www.iec.ch

About the IEC

The International Electrotechnical Commission (IEC) is the leading global organization that prepares and publishes International Standards for all electrical, electronic and related technologies.

About IEC publications

The technical content of IEC publications is kept under constant review by the IEC. Please make sure that you have the latest edition, a corrigenda or an amendment might have been published.

- Catalogue of IEC publications: www.iec.ch/searchpub
The IEC on-line Catalogue enables you to search by a variety of criteria (reference number, text, technical committee,…). It also gives information on projects, withdrawn and replaced publications.

- IEC Just Published: www.iec.ch/online_news/justpub
Stay up to date on all new IEC publications. Just Published details twice a month all new publications released. Available on-line and also by email.

- Electropedia: www.electropedia.org
The world's leading online dictionary of electronic and electrical terms containing more than 20 000 terms and definitions in English and French, with equivalent terms in additional languages. Also known as the International Electrotechnical Vocabulary online.

- Customer Service Centre: www.iec.ch/webstore/custserv
If you wish to give us your feedback on this publication or need further assistance, please visit the Customer Service Centre FAQ or contact us:

Email: csc@iec.ch
Tel.: +41 22 919 02 11
Fax: +41 22 919 03 00

Withdrawn
IECNORM.COM : Click to view the full PDF of IEC PAS 61169-39:2008
https://standards.iteh.ai/catalog/standards/iec/c520ae51-f12c-4731-a96f-ffcd3a515d7c/iec-pas-61169-39-2008

IEC/PAS 61169-39

Edition 1.0 2008-05

PUBLICLY AVAILABLE SPECIFICATION

PRE-STANDARD

Withdrawn

Radio-frequency connectors –
Part 39: Sectional specification for CQM series quick lock RF connectors

iTeh Standards
(https://standards.iteh.ai)
Document Preview
IEC PAS 61169-39:2008
https://standards.iteh.ai/catalog/standards/iec/c520ae51-f12c-4731-a96f-ffcd3a515d7c/iec-pas-61169-39-2008

INTERNATIONAL
ELECTROTECHNICAL
COMMISSION

PRICE CODE T

ICS 31.120.30

ISBN 2-8318-9774-2

CONTENTS

FOREWORD 4

1 Scope 6
2 Normative reference 6
3 Mating interface and gauge information 6
3.1 Dimensions – General connectors – Grade 2 7
3.1.1 Connector with pin – centre contact 7
3.1.2 Connectors with socket-centre contact 8
3.2 Gauges 9
3.2.1 Connectors with socket-centre contact 9
3.3 Dimensions – standard test connectors – Grade 0 10
3.3.1 Connector with pin-centre contact 10
3.3.2 Connector with socket-centre contact 11
4 Quality assessment procedure 12
4.1 General 12
4.2 Rating and characteristics (see Clause 6 of IEC 61169-1/QC220000) 12
4.3 Test schedule and inspection requirements 14
4.3.1 Acceptance tests 14
4.3.2 Periodic tests 15
4.4 Procedures 16
4.4.1 Quality conformance inspection 16
4.4.2 Qualification approval and its maintenance 16
5 Instructions for preparation of detail specifications 16
5.1 General 16
5.2 Identification of the detail specification 16
5.3 Identification of the component 17
5.4 Performance 17
5.5 Marking, ordering information and related matters 17
5.6 Selection of tests, test conditions and severities 17
5.7 Blank detail specification pro-forma for type CQM connector 18

Bibliography 23

Figure 1 – Connector with pin-centre contact (for dimensions, see Table 1) 7
Figure 2 – Connector with socket-centre contact (for dimensions, see Table 2) 8
Figure 3 – Gauge for outer contact of socket connector (for dimensions, see Table 3) 9
Figure 4 – Gauge pin for socket contact (for dimensions, see Table 4) 9
Figure 5 – Connector of pin-centre contact (for dimensions, see Table 5) 10
Figure 6 – Standard test connector with socket-centre contact (for dimensions, see Table 6) 11

Withdrawn
iTeh Standards
(https://standards.iteh.ai)
Document Preview
IEC PAS 61169-39:2008
https://standards.iteh.ai/catalog/standards/iec/e52ae51-f12c-4731-a96f-ffcd3a515d7c/iec-pas-61169-39-2008

Table 1 – Dimensions of connector with pin-centre contact 7
Table 2 – Dimensions of connector with socket-centre contact 8
Table 3 – Dimensions of gauge for outer contact of socket connector 9
Table 4 – Dimensions of gauge pin for socket contact 10
Table 5 – Dimensions of connector with pin-centre contact 11
Table 6 – Dimensions of standard test connector with socket-centre contact 12
Table 7 – Ratings and characteristics 13
Table 8 – Acceptance tests 14
Table 9 – Periodic tests 15

Withdrawn
iTeh Standards
(https://standards.iteh.ai)
Document Preview
IEC PAS 61169-39:2008
https://standards.iteh.ai/catalog/standards/iec/c520ae51-f12c-4731-a96f-ffcd3a515d7c/iec-pas-61169-39-2008

INTERNATIONAL ELECTROTECHNICAL COMMISSION

RADIO-FREQUENCY CONNECTORS –

Part 39: Sectional specification for CQM series quick lock RF connectors

FOREWORD

1) The International Electrotechnical Commission (IEC) is a worldwide organization for standardization comprising all national electrotechnical committees (IEC National Committees). The object of IEC is to promote international co-operation on all questions concerning standardization in the electrical and electronic fields. To this end and in addition to other activities, IEC publishes International Standards, Technical Specifications, Technical Reports, Publicly Available Specifications (PAS) and Guides (hereafter referred to as "IEC Publication(s)"). Their preparation is entrusted to technical committees; any IEC National Committee interested in the subject dealt with may participate in this preparatory work. International, governmental and non-governmental organizations liaising with the IEC also participate in this preparation. IEC collaborates closely with the International Organization for Standardization (ISO) in accordance with conditions determined by agreement between the two organizations.
2) The formal decisions or agreements of IEC on technical matters express, as nearly as possible, an international consensus of opinion on the relevant subjects since each technical committee has representation from all interested IEC National Committees.
3) IEC Publications have the form of recommendations for international use and are accepted by IEC National Committees in that sense. While all reasonable efforts are made to ensure that the technical content of IEC Publications is accurate, IEC cannot be held responsible for the way in which they are used or for any misinterpretation by any end user.
4) In order to promote international uniformity, IEC National Committees undertake to apply IEC Publications transparently to the maximum extent possible in their national and regional publications. Any divergence between any IEC Publication and the corresponding national or regional publication shall be clearly indicated in the latter.
5) IEC provides no marking procedure to indicate its approval and cannot be rendered responsible for any equipment declared to be in conformity with an IEC Publication.
6) All users should ensure that they have the latest edition of this publication.
7) No liability shall attach to IEC or its directors, employees, servants or agents including individual experts and members of its technical committees and IEC National Committees for any personal injury, property damage or other damage of any nature whatsoever, whether direct or indirect, or for costs (including legal fees) and expenses arising out of the publication, use of, or reliance upon, this IEC Publication or any other IEC Publications.
8) Attention is drawn to the Normative references cited in this publication. Use of the referenced publications is indispensable for the correct application of this publication.
9) Attention is drawn to the possibility that some of the elements of this IEC Publication may be the subject of patent rights. IEC shall not be held responsible for identifying any or all such patent rights.

Withdrawn
iTeh Standards
(https://standards.iteh.ai)
Document Preview
IEC PAS 61169-39:2008
https://standards.iteh.ai/catalog/standards/iec/c520ae51-f12c-4731-a96f-ffcd3a515d7c/iec-pas-61169-39-2008

A PAS is a technical specification not fulfilling the requirements for a standard, but made available to the public.

IEC-PAS 62269-39 has been processed by subcommittee 46F: RF and microwave passive components, of IEC technical committee 46: Cables, wires, waveguides, R.F. connectors, R.F. and microwave passive components and accessories.

The text of this PAS is based on the following document:	This PAS was approved for publication by the P-members of the committee concerned as indicated in the following document
Draft PAS	Report on voting
46F/80/ PAS	46F/85/ RVD

Following publication of this PAS, which is a pre-standard publication, the technical committee or subcommittee concerned will transform it into an International Standard.

This PAS shall remain valid for an initial maximum period of 3 years starting from the publication date. The validity may be extended for a single 3-year period, following which it shall be revised to become another type of normative document, or shall be withdrawn.

Withdrawn
iTeh Standards
(https://standards.iteh.ai)
Document Preview
IEC PAS 61169-39:2008
https://standards.iteh.ai/catalog/standards/iec/c520ae51-f12c-4731-a96f-ffcd3a515d7c/iec-pas-61169-39-2008

RADIO-FREQUENCY CONNECTORS –

Part 39: Sectional specification for CQM series quick lock RF connectors

1 Scope

CQM Series quick lock connectors with characteristic impedance 50 Ω are used for high power microwave applications, connecting with RF cables or microstrips. The operating frequency limit is at least 4 GHz.

This PAS is a sectional specification providing information and rules for the preparation of detail specifications for CQM series quick lock RF connectors together with the pro forma blank detail specification.

It also prescribes mating interface dimensions for general purpose connectors, dimensional details of standard test connectors grade 0, gauging information and tests selected from QC 220000 (IEC 61169-1), applicable to all detail specifications relating to CQM series connectors.

This specification indicates the recommended performance characteristics to be considered when writing a detail specification and it covers test schedules and inspection requirements for assessment levels M and H.

iTeh Standards
(https://standards.iteh.ai)
Document Preview
IEC PAS 61169-39:2008
https://standards.iteh.ai/catalog/standards/sist/...-iec-pas-61169-39-2008
Withdrawn

2 Normative references

The following referenced documents are indispensable for the application of this document. For dated references, only the edition cited applies. For undated references, the latest edition of the referenced document (including any amendments) applies.

IEC 61169-1:1992, *Radio-frequency connectors – Part 1: Generic specification – General requirements and measuring methods*[1)]

Amendment 1 (1996)
Amendment 2 (1997)

3 Mating interface and gauge information

All undimensioned pictorial configurations are for reference purposes only.

---

1) A consolidated edition 1.2 (1998) exists, that comprises IEC 61169-1 (1992), Amendment 1 and Amendment 2.

3.1 Dimensions – General connectors – Grade 2

3.1.1 Connector with pin – centre contact

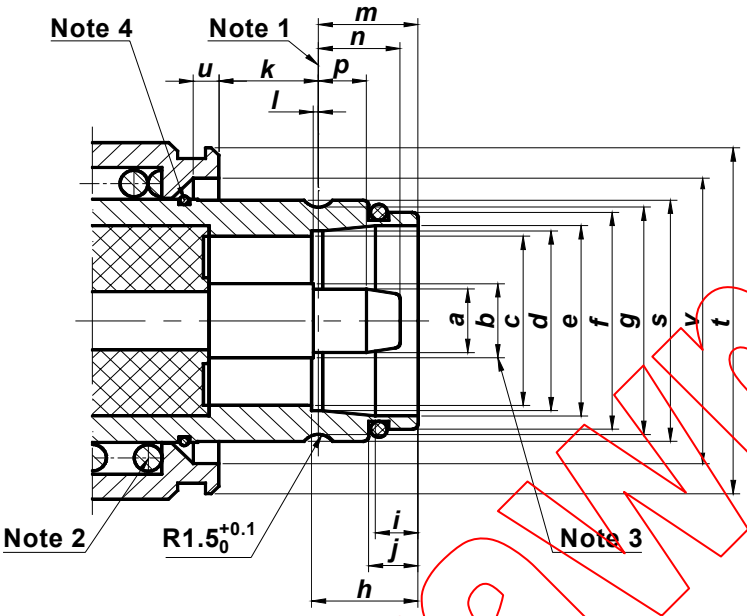

Figure 1 – Connector with pin-centre contact
(for dimensions, see Table 1)

Table 1 – Dimensions of connector with pin-centre contact

Ref.	mm		Notes
a	5,96	6,04	Diameter
b	7 (nominal)		Diameter
c	15,85	16,25	Diameter
d	16,90	17,10	Diameter
e	18,00	18,20	Diameter
f	21,00	21,20	Diameter
g	21,90	22,10	Diameter
h	8,90	9,20	
i	3,70	3,90	
j	4,30	4,50	
k	–	9,80	
l	0,30	0,50	
m	8,80	9,00	
n	7,20	7,40	
s	23,20	23,30	Diameter
t	35,00	35,20	Diameter
p	4,20	4,40	
u	2,10	2,30	
v	26,9	27,2	Diameter

NOTE 1 Mechanical reference plane.

NOTE 2 The spring force is 50 N to 60 N max.

NOTE 3 Tolerances of dimensions are to meet the requirements of characteristic impedances.

NOTE 4 Ring.

Withdrawn
iTeh Standards
(https://standards.iteh.ai)
Document Preview
IEC PAS 61169-39:2008
https://standards.iteh.ai/catalog/standards/iec/c0a0ae51-f12c-4737-a96f-fcd3a515d7c/iec-pas-61169-39-2008

3.1.2 Connectors with socket-centre contact

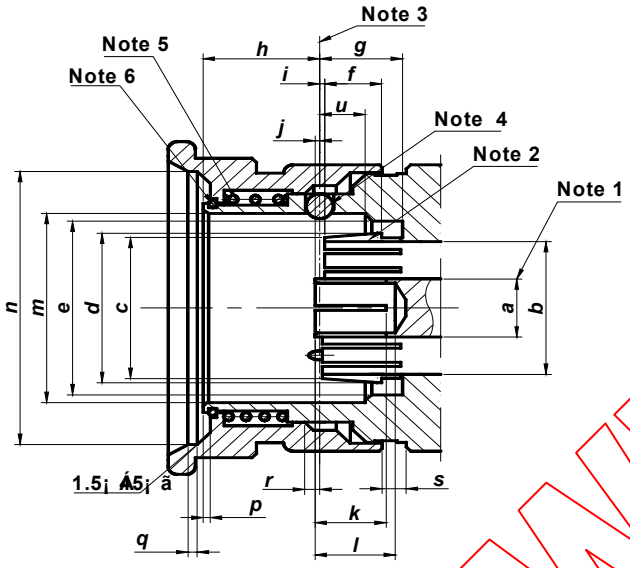

Figure 2 – Connector with socket-centre contact
(for dimensions, see Table 2)

Table 2 – Dimensions of connector with socket-centre contact

Ref.	mm		Notes
	min	max	
a	7（nominal）		1
b	15,85	16,25	
c	16,70	16,90	
d	17,80	18,00	
e	22,10	22,30	
f	6,30	6,50	
g	9,10	9,30	
h	12,75	12,85	
i	0,20	0,40	
j	–	0,20	
k	7,00	7,50	
l	8,50	9,00	
m	23,60	23,80	
n	35,20	35,40	
p	0,80	1,00	
q	1,10	1,30	
r	1,60	–	
s	2,60	–	
u	4,90	5,20	

NOTE 1 Design for slotting optional, closed contacts should meet electrical and mechanical requirements.

NOTE 2 Design for slotting optical, flared contacts Ø*c* should be flared to Ø18,4～Ø18,5.

NOTE 3 Mechanical reference plane.

NOTE 4 Three steel balls, Ø3;

NOTE 5 The spring force is 2 N to 6 N, treval is 1,60 mm min.

NOTE 6 Ring.

iTeh Standards (https://standards.iteh.ai) Document Preview
IEC PAS 61169-39:2008
https://standards.iteh.ai/catalog/standards/iec/...-ffcd3a515d7c/iec-pas-61169-39-2008
Withdrawn