IEC 61169-39

Edition 1.0 2009-06

INTERNATIONAL STANDARD

NORME INTERNATIONALE

colour inside

Radio-frequency connectors –
Part 39: Sectional specification for CQM series quick lock RF connectors

iTeh STANDARD PREVIEW
(standards.iteh.ai)

Connecteurs pour fréquences radioélectriques –
Partie 39: Spécification intermédiaire pour les connecteurs RF à verrouillage rapide de la série CQM

IEC 61169-39:2009
https://standards.iteh.ai/catalog/standards/sist/99c3e367-3360-41f4-ab18-515bf47f5193/iec-61169-39-2009



IEC 61169-39:2009

THIS PUBLICATION IS COPYRIGHT PROTECTED

Copyright © 2009 IEC, Geneva, Switzerland

All rights reserved. Unless otherwise specified, no part of this publication may be reproduced or utilized in any form or by any means, electronic or mechanical, including photocopying and microfilm, without permission in writing from either IEC or IEC's member National Committee in the country of the requester.
If you have any questions about IEC copyright or have an enquiry about obtaining additional rights to this publication, please contact the address below or your local IEC member National Committee for further information.

Droits de reproduction réservés. Sauf indication contraire, aucune partie de cette publication ne peut être reproduite ni utilisée sous quelque forme que ce soit et par aucun procédé, électronique ou mécanique, y compris la photocopie et les microfilms, sans l'accord écrit de la CEI ou du Comité national de la CEI du pays du demandeur.
Si vous avez des questions sur le copyright de la CEI ou si vous désirez obtenir des droits supplémentaires sur cette publication, utilisez les coordonnées ci-après ou contactez le Comité national de la CEI de votre pays de résidence.

IEC Central Office
3, rue de Varembé
CH-1211 Geneva 20
Switzerland
Email: inmail@iec.ch
Web: www.iec.ch

About the IEC

The International Electrotechnical Commission (IEC) is the leading global organization that prepares and publishes International Standards for all electrical, electronic and related technologies.

About IEC publications

The technical content of IEC publications is kept under constant review by the IEC. Please make sure that you have the latest edition, a corrigenda or an amendment might have been published.

- Catalogue of IEC publications: www.iec.ch/searchpub

The IEC on-line Catalogue enables you to search by a variety of criteria (reference number, text, technical committee,…). It also gives information on projects, withdrawn and replaced publications.

- IEC Just Published: www.iec.ch/online_news/justpub

Stay up to date on all new IEC publications. Just Published details twice a month all new publications released. Available on-line and also by email.

- Electropedia: www.electropedia.org

The world's leading online dictionary of electronic and electrical terms containing more than 20 000 terms and definitions in English and French, with equivalent terms in additional languages. Also known as the International Electrotechnical Vocabulary online.

- Customer Service Centre: www.iec.ch/webstore/custserv

If you wish to give us your feedback on this publication or need further assistance, please visit the Customer Service Centre FAQ or contact us:
Email: csc@iec.ch
Tel.: +41 22 919 02 11
Fax: +41 22 919 03 00

iTeh STANDARD PREVIEW
(standards.iteh.ai)
IEC 61169-39:2009
https://standards.iteh.ai/catalog/standards/sist/99c5e367-5360-41f4-ab18-21306f1f0f2f/iec-61169-39-2009

A propos de la CEI

La Commission Electrotechnique Internationale (CEI) est la première organisation mondiale qui élabore et publie des normes internationales pour tout ce qui a trait à l'électricité, à l'électronique et aux technologies apparentées.

A propos des publications CEI

Le contenu technique des publications de la CEI est constamment revu. Veuillez vous assurer que vous possédez l'édition la plus récente, un corrigendum ou amendement peut avoir été publié.

- Catalogue des publications de la CEI: www.iec.ch/searchpub/cur_fut-f.htm

Le Catalogue en-ligne de la CEI vous permet d'effectuer des recherches en utilisant différents critères (numéro de référence, texte, comité d'études,…). Il donne aussi des informations sur les projets et les publications retirées ou remplacées.

- Just Published CEI: www.iec.ch/online_news/justpub

Restez informé sur les nouvelles publications de la CEI. Just Published détaille deux fois par mois les nouvelles publications parues. Disponible en-ligne et aussi par email.

- Electropedia: www.electropedia.org

Le premier dictionnaire en ligne au monde de termes électroniques et électriques. Il contient plus de 20 000 termes et définitions en anglais et en français, ainsi que les termes équivalents dans les langues additionnelles. Egalement appelé Vocabulaire Electrotechnique International en ligne.

- Service Clients: www.iec.ch/webstore/custserv/custserv_entry-f.htm

Si vous désirez nous donner des commentaires sur cette publication ou si vous avez des questions, visitez le FAQ du Service clients ou contactez-nous:
Email: csc@iec.ch
Tél.: +41 22 919 02 11
Fax: +41 22 919 03 00

IEC 61169-39

Edition 1.0 2009-06

INTERNATIONAL STANDARD

NORME INTERNATIONALE

colour inside

Radio-frequency connectors –
Part 39: Sectional specification for CQM series quick lock RF connectors

iTeh STANDARD PREVIEW
(standards.iteh.ai)

Connecteurs pour fréquences radioélectriques –
Partie 39: Spécification intermédiaire pour les connecteurs RF à verrouillage rapide de la série CQM

IEC 61169-39:2009
https://standards.iteh.ai/catalog/standards/sist/99c5e507-3566-4114-a618-515bf47f5193/iec-61169-39-2009

INTERNATIONAL
ELECTROTECHNICAL
COMMISSION

COMMISSION
ELECTROTECHNIQUE
INTERNATIONALE

PRICE CODE
CODE PRIX U

ICS 33.120.30

ISBN 978-2-88912-392-6

® Registered trademark of the International Electrotechnical Commission
Marque déposée de la Commission Electrotechnique Internationale

CONTENTS

FOREWORD 4
1 Scope 6
2 Normative references 6
3 Mating interface and gauge information 6
3.1 Dimensions-General connectors – Grade 2 7
3.1.1 Connector with pin-centre contact 7
3.1.2 Connectors with socket-centre contact 8
3.2 Gauges 9
3.2.1 Connectors with socket-centre contact 9
3.3 Dimensions – standard test connectors – Grade 0 11
3.3.1 Connector with pin-centre contact 11
3.3.2 Connector with socket-centre contact 13
4 Quality assessment procedure 14
4.1 General 14
4.2 Rating and characteristics (see Clause 6 of IEC 61169-1) 14
4.3 Test schedule and inspection requirements 17
4.3.1 Acceptance tests 17
4.3.2 Periodic tests 18
4.4 Procedures 19
4.4.1 Quality conformance inspection 19
4.4.2 Qualification approval and its maintenance 19
5 Instructions for preparation of detail specifications 19
5.1 General 19
5.2 Identification of the detail specification 20
5.3 Identification of the component 20
5.4 Performance 20
5.5 Marking, ordering information and related matters 20
5.6 Selection of tests, test conditions and severities 20
5.7 Blank detail specification pro-forma for type CQM connector 21
Bibliography 26

Figure 1 – Connector with pin-centre contact (for dimensions, see Table 1) 7
Figure 2 – Connector with socket-centre contact (for dimensions, see Table 2) 8
Figure 3 – Gauge for outer contact of socket connector (for dimensions, see Table 3) 9
Figure 4 – Gauge pin for socket contact (for dimensions, see Table 4) 9
Figure 5 – Connector of pin-centre contact (for dimensions, see Table 5) 11
Figure 6 – Standard test connector with socket-centre contact (for dimensions, see Table 6) 13

Table 1 – Dimensions of connector with pin-centre contact 7
Table 2 – Dimensions of connector with socket-centre contact 8
Table 3 – Dimensions of gauge for outer contact of socket connector 9
Table 4 – Dimensions of gauge pin for socket contact 10
Table 5 – Dimensions of connector with pin-centre contact 12

iTeh STANDARD PREVIEW
(standards.iteh.ai)
IEC 61169-39:2009
https://standards.iteh.ai/catalog/standards/sist/99c5e367-5360-41f4-ab18-515bf47f5193/iec-61169-39-2009

Table 6 – Dimensions of standard test connector with socket-centre contact 14
Table 7 – Ratings and characteristics 15
Table 8 – Acceptance tests 17
Table 9 – Periodic tests 18

iTeh STANDARD PREVIEW
(standards.iteh.ai)
IEC 61169-39:2009
https://standards.iteh.ai/catalog/standards/sist/99c5e367-5360-41f4-ab18-515bf47f5193/iec-61169-39-2009

INTERNATIONAL ELECTROTECHNICAL COMMISSION

RADIO-FREQUENCY CONNECTORS –

Part 39: Sectional specification for CQM series quick lock RF connectors

FOREWORD

1) The International Electrotechnical Commission (IEC) is a worldwide organization for standardization comprising all national electrotechnical committees (IEC National Committees). The object of IEC is to promote international co-operation on all questions concerning standardization in the electrical and electronic fields. To this end and in addition to other activities, IEC publishes International Standards, Technical Specifications, Technical Reports, Publicly Available Specifications (PAS) and Guides (hereafter referred to as "IEC Publication(s)"). Their preparation is entrusted to technical committees; any IEC National Committee interested in the subject dealt with may participate in this preparatory work. International, governmental and non-governmental organizations liaising with the IEC also participate in this preparation. IEC collaborates closely with the International Organization for Standardization (ISO) in accordance with conditions determined by agreement between the two organizations.
2) The formal decisions or agreements of IEC on technical matters express, as nearly as possible, an international consensus of opinion on the relevant subjects since each technical committee has representation from all interested IEC National Committees.
3) IEC Publications have the form of recommendations for international use and are accepted by IEC National Committees in that sense. While all reasonable efforts are made to ensure that the technical content of IEC Publications is accurate, IEC cannot be held responsible for the way in which they are used or for any misinterpretation by any end user.
4) In order to promote international uniformity, IEC National Committees undertake to apply IEC Publications transparently to the maximum extent possible in their national and regional publications. Any divergence between any IEC Publication and the corresponding national or regional publication shall be clearly indicated in the latter.
5) IEC provides no marking procedure to indicate its approval and cannot be rendered responsible for any equipment declared to be in conformity with an IEC Publication.
6) All users should ensure that they have the latest edition of this publication.
7) No liability shall attach to IEC or its directors, employees, servants or agents including individual experts and members of its technical committees and IEC National Committees for any personal injury, property damage or other damage of any nature whatsoever, whether direct or indirect, or for costs (including legal fees) and expenses arising out of the publication, use of, or reliance upon, this IEC Publication or any other IEC Publications.
8) Attention is drawn to the Normative references cited in this publication. Use of the referenced publications is indispensable for the correct application of this publication.
9) Attention is drawn to the possibility that some of the elements of this IEC Publication may be the subject of patent rights. IEC shall not be held responsible for identifying any or all such patent rights.

iTeh STANDARD PREVIEW
(standards.iteh.ai)
IEC 61169-39:2009
https://standards.iteh.ai/catalog/standards/sist/09c5e367-5360-41f4-ab18-515bf47f5193/iec-61169-39-2009

International Standard IEC 61169-39 has been prepared by subcommittee 46F: RF and microwave passive components, of IEC technical committee 46: Cables, wires, waveguides, R.F. connectors, R.F. and microwave passive components and accessories.

This bilingual version, published in 2011-04, corresponds to the English version.

The text of this standard is based on the following documents:

CDV	Report on voting
46F/107/CDV	46F/133/RVC

Full information on the voting for the approval of this standard can be found in the report on voting indicated in the above table.

The French version of this standard has not been voted upon

This publication has been drafted in accordance with the ISO/IEC Directives, Part 2.

The committee has decided that the contents of this publication will remain unchanged until the stability date indicated on the IEC web site under "http://webstore.iec.ch" in the data related to the specific publication. At this date, the publication will be

- reconfirmed,
- withdrawn,
- replaced by a revised edition, or
- amended.

A list of all parts of the IEC 61169 series can be found, under the general title *Radio-frequency connectors*, on the IEC website.

IMPORTANT – The 'colour inside' logo on the cover page of this publication indicates that it contains colours which are considered to be useful for the correct understanding of its contents. Users should therefore print this document using a colour printer.

iTeh STANDARD PREVIEW
(standards.iteh.ai)
IEC 61169-39:2009
https://standards.iteh.ai/catalog/standards/sist/99c5e367-5360-41f4-ab18-515bf47f5193/iec-61169-39-2009

RADIO-FREQUENCY CONNECTORS –

Part 39: Sectional specification for CQM series quick lock RF connectors

1 Scope

CQM series quick lock connectors with characteristic impedance 50 Ω are used for high power microwave applications, connecting with RF cables or microstrips. The operating frequency limit is at least 4 GHz.

This sectional specification provides information and rules for the preparation of detail specifications for CQM series quick lock RF connectors together with the pro forma blank detail specification (DS).

It also prescribes mating interface dimensions for general purpose connectors, dimensional details of standard test connectors grade 0, gauging information and tests selected from IEC 61169-1, applicable to all detail specifications relating to CQM series connectors.

This specification indicates the recommended performance characteristics to be considered when writing a detail specification and it covers test schedules and inspection requirements for assessment levels M and H.

iTeh STANDARD PREVIEW
(standards.iteh.ai)

2 Normative references

IEC 61169-39:2009
https://standards.iteh.ai/catalog/standards/sist/99c5e367-5360-41f4-ab18-515bf875b93d/iec-61169-39-2009

The following referenced documents are indispensable for the application of this document. For dated references, only the edition cited applies. For undated references, the latest edition of the referenced document (including any amendments) applies.

IEC 61169-1:1992, *Radio-frequency connectors – Part 1: Generic specification – General requirements and measuring methods*

3 Mating interface and gauge information

All undimensioned pictorial configurations are for reference purposes only.

3.1 Dimensions – General connectors – Grade 2

3.1.1 Connector with pin-centre contact

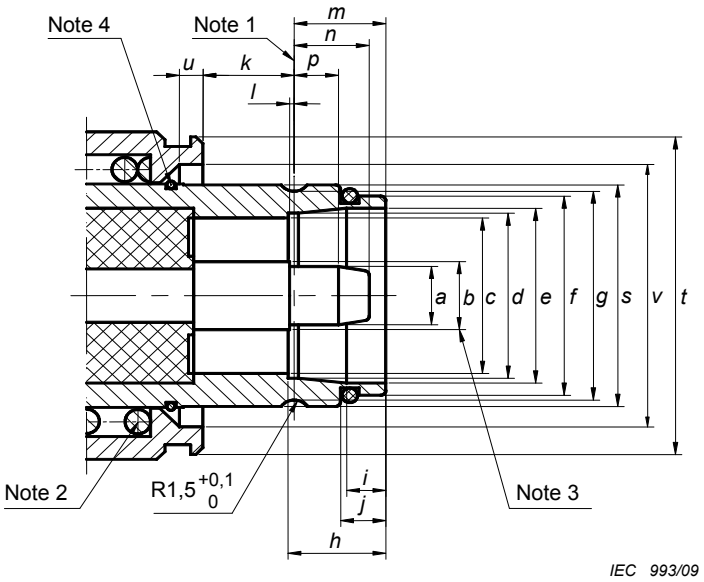

Figure 1 – Connector with pin-centre contact (for dimensions, see Table 1)

iTeh STANDARD PREVIEW
(standards.iteh.ai)

Table 1 – Dimensions of connector with pin-centre contact

IEC 61169-39:2009
https://standards.iteh.ai/catalog/standards/sist/9...-...-...-

3.1.2 Connectors with socket-centre contact

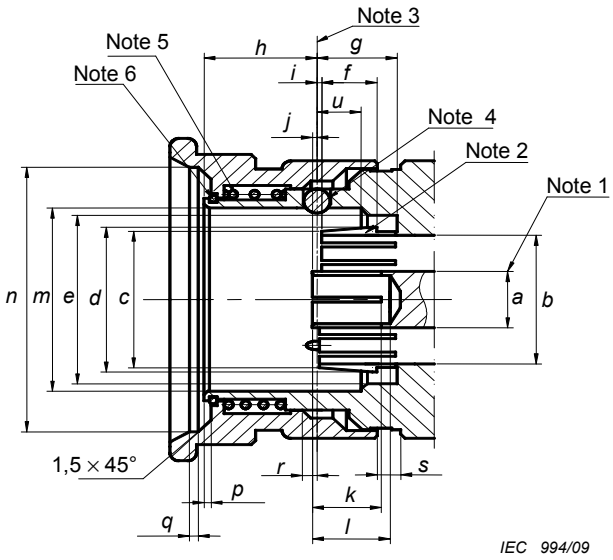

Figure 2 – Connector with socket-centre contact (for dimensions, see Table 2)

Table 2 – Dimensions of connector with socket-centre contact

iTeh STANDARD PREVIEW
(standards.iteh.ai)
IEC 61169-39:2009
https://standards.iteh.ai/catalog/standards/sist/99c5e367-5360-41f4-ab18-515bf4715193/iec-61169-39-2009

Reference	mm		Note
	Min.	Max.	
a	7 (nominal)		Diameter (Note 1)
b	15,85	16,25	Diameter
c	16,70	16,90	Diameter
d	17,80	18,00	Diameter
e	22,10	22,30	Diameter
f	6,30	6,50	
g	9,10	9,30	
h	12,75	12,85	
i	0,20	0,40	
j	--	0,20	
k	7,00	7,50	
l	8,50	9,00	
m	23,60	23,80	Diameter
n	35,20	35,40	Diameter
p	0,80	1,00	
q	1,10	1,30	
r	1,60	--	
s	2,60	--	
u	4,90	5,20	

NOTE 1 Design for slotting optional, closed contacts should meet electrical and mechanical requirements.
NOTE 2 Design for slotting optional, flared contacts Ø*d* should be flared to Ø18,4～Ø18,5.
NOTE 3 Mechanical reference plane.
NOTE 4 Three steel balls, Ø3.
NOTE 5 The spring force is 2 N to 6 N, movement is 1,60 mm min.
NOTE 6 Ring.

3.2 Gauges

3.2.1 Connectors with socket-centre contact

3.2.1.1 Gauge for outer contact of socket connector

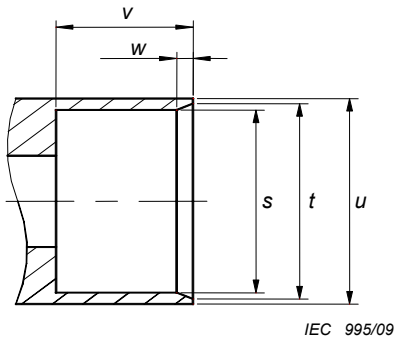

Figure 3 – Gauge for outer contact of socket connector (for dimensions, see Table 3)

Table 3 – Dimensions of gauge for outer contact of socket connector

Gauge A (for sizing purposes)			Gauge B (for measurement of gauge retention force for outer conductor) Mass (weight) of gauge: 200 g ± 5 g		Note
Ref.	mm		mm		
	Min.	Max.	Min.	Max.	
s	18,05	18,10	18,15	18,18	
t	18,70	18,80	18,70	18,80	
u	20,00	20,80	20,00	20,80	
v	9,50	9,60	9,40	9,50	
w	1,30	1,50	1,30	1,50	
NOTE Material: steel, polished, surface roughness: Ra ≤ 0,4 µm.					

iTeh STANDARD PREVIEW
(standards.iteh.ai)
IEC 61169-39:2009
https://standards.iteh.ai/catalog/standards/sist/99c5e367-5360-41f4-a818-5155f47f5193/iec-61169-39-2009

3.2.1.2 Test sequence

Gauge A shall be placed over the outer contact of the connector once. This is a sizing operation. After this, gauge B shall be placed over the outer contact in a vertical position. The gauge shall be retained.

3.2.1.3 Gauge pin for socket-centre contact

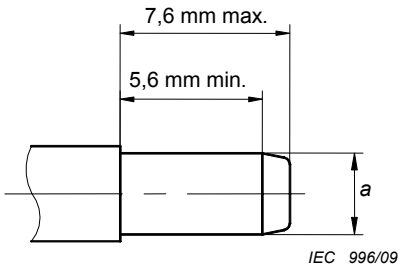

Figure 4 – Gauge pin for socket contact (for dimensions, see Table 4)

Table 4 – Dimensions of gauge pin for socket contact

Gauge C (for sizing purposes)			Gauge D (for measurement of gauge retention force for centre contact) Mass (weight) of gauge: 600 g ± 5 g	
Ref.	mm		mm	
	Min.	Max.	Min.	Max.
a	6,05	6,10	5,95	6,00
NOTE Material: steel, polished, surface roughness: Ra ≤ 0,4 µm.				

3.2.1.4 Test sequence

Test pin gauge C shall be inserted into the centre contact three times with a minimum depth of 5,6 mm. This is a sizing operation and should only be carried out when the socket centre contact is removed from the connector.

After this, gauge D shall be inserted and held in the vertical position. The gauge shall be retained. This test can also be carried out on connector when the socket centre contact is not removed once the sizing operation has been carried out on the contact whilst it was removed from the connector.

iTeh STANDARD PREVIEW
(standards.iteh.ai)
IEC 61169-39:2009
https://standards.iteh.ai/catalog/standards/sist/99c5e367-5360-41f4-ab18-515bf47f5193/iec-61169-39-2009

3.3 Dimensions – standard test connectors – Grade 0

3.3.1 Connector with pin-centre contact

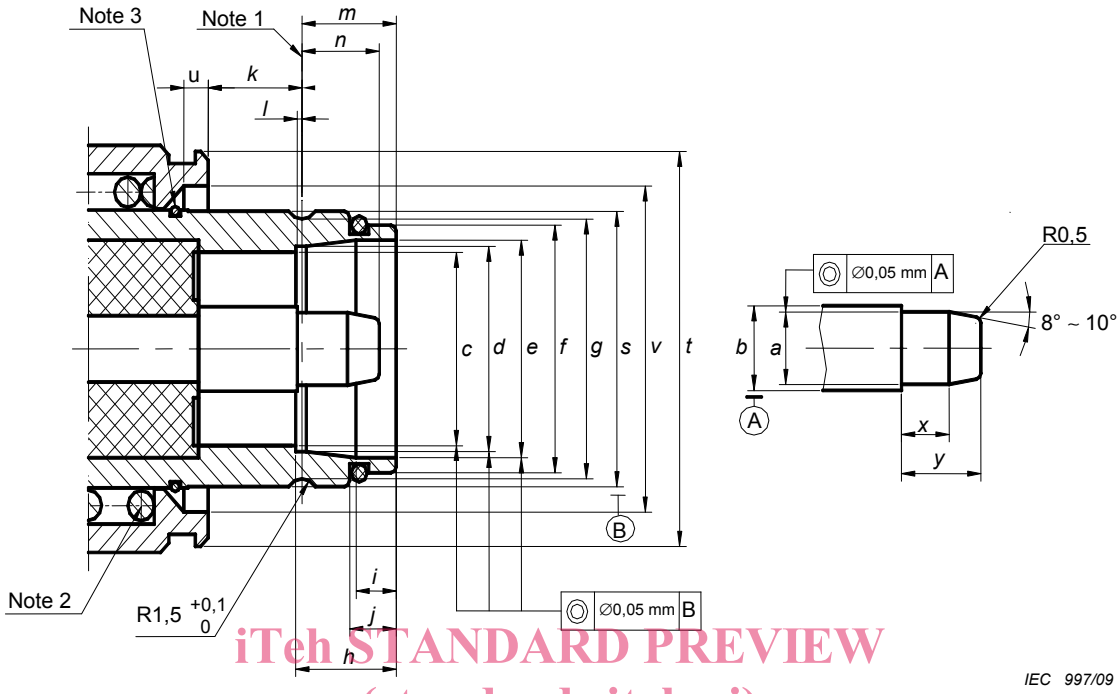

iTeh STANDARD PREVIEW
(standards.iteh.ai)

Figure 5 – Connector of pin-centre contact (for dimensions, see Table 5)

IEC 61169-39:2009
https://standards.iteh.ai/catalog/standards/sist/99c5e367-5360-41f4-ab18-515bf47f5193/iec-61169-39-2009

Table 5 – Dimensions of connector with pin-centre contact

Reference	mm		Note
	Min.	Max.	
a	5,99	6,00	Diameter
b	6,97	6,98	Diameter
c	16,05	16,07	Diameter
d	16,96	17,04	Diameter
e	18,05	18,15	Diameter
f	21,05	21,15	Diameter
g	21,95	22,05	Diameter
h	9,02	9,08	
i	3,77	3,83	
j	4,35	4,45	
k	9,70	9,80	
l	0,30	0,50	
m	8,86	8,94	
n	7,27	7,33	
s	22,20	22,25	Diameter
t	23,04	23,10	Diameter
u	2,15	2,25	
v	27,00	27,10	Diameter
x	4,20	4,40	
y	7,20	7,40	

NOTE 1 Mechanical reference plane.
NOTE 2 The spring force is 50 N to 60 N.
NOTE 3 Ring.

iTeh STANDARD PREVIEW
(standards.iteh.ai)
IEC 61169-39:2009
https://standards.iteh.ai/catalog/standards/sist/99c5e367-5360-41f4-ab18-515bf4715193/iec-61169-39-2009

3.3.2 Connector with socket-centre contact

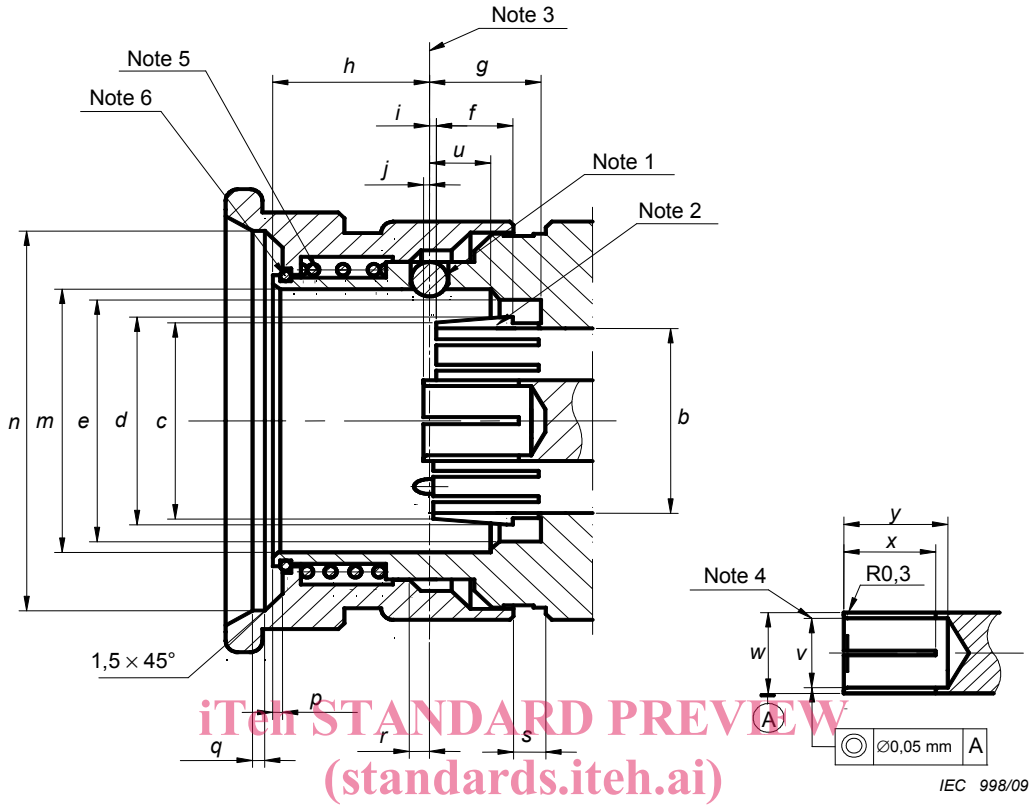

iTeh STANDARD PREVIEW
(standards.iteh.ai)

Figure 6 – Standard test connector with socket-centre contact (for dimensions, see Table 6)

IEC 61169-39:2009
https://standards.iteh.ai/catalog/standards/sist/99a5e367-5360-41f4-ab18-515bf47f5193/iec-61169-39-2009