IEC 61169-40

Edition 1.0 2010-11

INTERNATIONAL STANDARD

NORME INTERNATIONALE

colour inside

Radio-frequency connectors –
Part 40: Sectional specification for 2.4 series RF connectors

iTeh STANDARD PREVIEW
(standards.iteh.ai)

Connecteurs pour fréquences radioélectriques –
Partie 40: Spécification intermédiaire pour les connecteurs RF série 2.4

IEC 61169-40:2010
https://standards.iteh.ai/catalog/standards/sist/1e907345-e200-4dd5-84ab-53affe68f3a8/iec-61169-40-2010



IEC 61169-40:2010

THIS PUBLICATION IS COPYRIGHT PROTECTED
Copyright © 2010 IEC, Geneva, Switzerland

All rights reserved. Unless otherwise specified, no part of this publication may be reproduced or utilized in any form or by any means, electronic or mechanical, including photocopying and microfilm, without permission in writing from either IEC or IEC's member National Committee in the country of the requester.
If you have any questions about IEC copyright or have an enquiry about obtaining additional rights to this publication, please contact the address below or your local IEC member National Committee for further information.

Droits de reproduction réservés. Sauf indication contraire, aucune partie de cette publication ne peut être reproduite ni utilisée sous quelque forme que ce soit et par aucun procédé, électronique ou mécanique, y compris la photocopie et les microfilms, sans l'accord écrit de la CEI ou du Comité national de la CEI du pays du demandeur.
Si vous avez des questions sur le copyright de la CEI ou si vous désirez obtenir des droits supplémentaires sur cette publication, utilisez les coordonnées ci-après ou contactez le Comité national de la CEI de votre pays de résidence.

IEC Central Office
3, rue de Varembé
CH-1211 Geneva 20
Switzerland
Email: inmail@iec.ch
Web: www.iec.ch

About the IEC

The International Electrotechnical Commission (IEC) is the leading global organization that prepares and publishes International Standards for all electrical, electronic and related technologies.

About IEC publications

The technical content of IEC publications is kept under constant review by the IEC. Please make sure that you have the latest edition, a corrigenda or an amendment might have been published.

- Catalogue of IEC publications: www.iec.ch/searchpub

The IEC on-line Catalogue enables you to search by a variety of criteria (reference number, text, technical committee,…). It also gives information on projects, withdrawn and replaced publications.

- IEC Just Published: www.iec.ch/online_news/justpub

Stay up to date on all new IEC publications. Just Published details twice a month all new publications released. Available on-line and also by email.

- Electropedia: www.electropedia.org

The world's leading online dictionary of electronic and electrical terms containing more than 20 000 terms and definitions in English and French, with equivalent terms in additional languages. Also known as the International Electrotechnical Vocabulary online.

- Customer Service Centre: www.iec.ch/webstore/custserv

If you wish to give us your feedback on this publication or need further assistance, please visit the Customer Service Centre FAQ or contact us:
Email: csc@iec.ch
Tel.: +41 22 919 02 11
Fax: +41 22 919 03 00

iTeh STANDARD PREVIEW
(standards.iteh.ai)
IEC 61169-40:2010
https://standards.iteh.ai/catalog/standards/sist/1e907545-c200-4dd5-84ab-53affe68f3a8/iec-61169-40-2010

A propos de la CEI

La Commission Electrotechnique Internationale (CEI) est la première organisation mondiale qui élabore et publie des normes internationales pour tout ce qui a trait à l'électricité, à l'électronique et aux technologies apparentées.

A propos des publications CEI

Le contenu technique des publications de la CEI est constamment revu. Veuillez vous assurer que vous possédez l'édition la plus récente, un corrigendum ou amendement peut avoir été publié.

- Catalogue des publications de la CEI: www.iec.ch/searchpub/cur_fut-f.htm

Le Catalogue en-ligne de la CEI vous permet d'effectuer des recherches en utilisant différents critères (numéro de référence, texte, comité d'études,…). Il donne aussi des informations sur les projets et les publications retirées ou remplacées.

- Just Published CEI: www.iec.ch/online_news/justpub

Restez informé sur les nouvelles publications de la CEI. Just Published détaille deux fois par mois les nouvelles publications parues. Disponible en-ligne et aussi par email.

- Electropedia: www.electropedia.org

Le premier dictionnaire en ligne au monde de termes électroniques et électriques. Il contient plus de 20 000 termes et définitions en anglais et en français, ainsi que les termes équivalents dans les langues additionnelles. Egalement appelé Vocabulaire Electrotechnique International en ligne.

- Service Clients: www.iec.ch/webstore/custserv/custserv_entry-f.htm

Si vous désirez nous donner des commentaires sur cette publication ou si vous avez des questions, visitez le FAQ du Service clients ou contactez-nous:
Email: csc@iec.ch
Tél.: +41 22 919 02 11
Fax: +41 22 919 03 00

IEC 61169-40

Edition 1.0 2010-11

INTERNATIONAL STANDARD

NORME INTERNATIONALE

colour inside

Radio-frequency connectors –
Part 40: Sectional specification for 2.4 series RF connectors

iTeh STANDARD PREVIEW
(standards.iteh.ai)

Connecteurs pour fréquences radioélectriques –
Partie 40: Spécification intermédiaire pour les connecteurs RF série 2.4

IEC 61169-40:2010
https://standards.iteh.ai/catalog/standards/sist/1e9e7545-e2ee-4ad5-84ab-53affe68f3a8/iec-61169-40-2010

INTERNATIONAL
ELECTROTECHNICAL
COMMISSION

COMMISSION
ELECTROTECHNIQUE
INTERNATIONALE

PRICE CODE
CODE PRIX T

ICS 33.120.30

ISBN 978-2-88912-255-4

® Registered trademark of the International Electrotechnical Commission
Marque déposée de la Commission Electrotechnique Internationale

CONTENTS

FOREWORD....4
1 Scope....6
2 Normative references....6
3 Mating face and gauge information....7
3.1 Dimensions – High performance connectors – Grade 1....7
3.1.1 Connector with pin-centre contact....7
3.1.2 Connector with socket-centre contact....8
3.2 Gauges....9
3.2.1 Gauge pins for socket-centre contact....9
3.2.2 Test procedure....9
3.3 Dimensions – Standard test connectors – Grade 0....10
3.3.1 Connector with pin-centre contact....10
3.3.2 Connector with socket-centre contact....11
4 Quality assessment procedure....12
4.1 General....12
4.2 Rating and characteristics (see Clause 6 of IEC 61169-1)....12
4.3 Test schedule and inspection requirements....15
4.3.1 Acceptance tests....15
4.3.2 Periodic tests....15
4.4 Procedures....17
4.4.1 Quality conformance inspection....17
4.4.2 Qualification approval and its maintenance....17
5 Instructions for preparation of detail specifications....17
5.1 General....17
5.2 Identification of the detail specification....17
5.3 Identification of the component....17
5.4 Performance....18
5.5 Marking, ordering information and related matters....18
5.6 Selection of tests, test conditions and severities....18
6 Blank detail specification pro-forma for 2.4 connectors....19
Bibliography....24

Figure 1 – Connector with pin-centre contact (for dimensions and notes, see Table 1)....7
Figure 2 – Connector with socket-centre contact (for dimensions and notes, see Table 2)....8
Figure 3 – Gauge pins for socket-centre contact (for dimensions and notes, see Table 3)....9
Figure 4 – Connector with pin-centre contact (for dimensions and notes, see Table 4)....10
Figure 5 – Connector with socket-centre contact (for dimensions and notes, see Table 5)....11

iTeh STANDARD PREVIEW
(standards.iteh.ai)
IEC 61169-40:2010
https://standards.iteh.ai/catalog/standards/sist/1e907545-c200-4dd5-84ab-53affe68f5a8/iec-61169-40-2010

Table 1 – Dimensions of connector with pin-centre contact 7
Table 2 – Dimensions of connector with socket-centre contact 8
Table 3 – Dimensions of gauge pins for socket-centre contact 9
Table 4 – Dimensions of connector with pin-centre contact 10
Table 5 – Dimensions of connector with socket-centre contact 11
Table 6 – Preferred climatic categories (see IEC 60068-1) 12
Table 7 – Rating and characteristics 13
Table 8 – Acceptance tests 15
Table 9 – Periodic tests 15

iTeh STANDARD PREVIEW
(standards.iteh.ai)
IEC 61169-40:2010
https://standards.iteh.ai/catalog/standards/sist/1e907545-c200-4dd5-84ab-53affe68f3a8/iec-61169-40-2010

INTERNATIONAL ELECTROTECHNICAL COMMISSION

RADIO-FREQUENCY CONNECTORS –

Part 40: Sectional specification for 2.4 series RF connectors

FOREWORD

1) The International Electrotechnical Commission (IEC) is a worldwide organization for standardization comprising all national electrotechnical committees (IEC National Committees). The object of IEC is to promote international co-operation on all questions concerning standardization in the electrical and electronic fields. To this end and in addition to other activities, IEC publishes International Standards, Technical Specifications, Technical Reports, Publicly Available Specifications (PAS) and Guides (hereafter referred to as "IEC Publication(s)"). Their preparation is entrusted to technical committees; any IEC National Committee interested in the subject dealt with may participate in this preparatory work. International, governmental and non-governmental organizations liaising with the IEC also participate in this preparation. IEC collaborates closely with the International Organization for Standardization (ISO) in accordance with conditions determined by agreement between the two organizations.
2) The formal decisions or agreements of IEC on technical matters express, as nearly as possible, an international consensus of opinion on the relevant subjects since each technical committee has representation from all interested IEC National Committees.
3) IEC Publications have the form of recommendations for international use and are accepted by IEC National Committees in that sense. While all reasonable efforts are made to ensure that the technical content of IEC Publications is accurate, IEC cannot be held responsible for the way in which they are used or for any misinterpretation by any end user.
4) In order to promote international uniformity, IEC National Committees undertake to apply IEC Publications transparently to the maximum extent possible in their national and regional publications. Any divergence between any IEC Publication and the corresponding national or regional publication shall be clearly indicated in the latter.
5) IEC itself does not provide any attestation of conformity. Independent certification bodies provide conformity assessment services and, in some areas, access to IEC marks of conformity. IEC is not responsible for any services carried out by independent certification bodies.
6) All users should ensure that they have the latest edition of this publication.
7) No liability shall attach to IEC or its directors, employees, servants or agents including individual experts and members of its technical committees and IEC National Committees for any personal injury, property damage or other damage of any nature whatsoever, whether direct or indirect, or for costs (including legal fees) and expenses arising out of the publication, use of, or reliance upon, this IEC Publication or any other IEC Publications.
8) Attention is drawn to the Normative references cited in this publication. Use of the referenced publications is indispensable for the correct application of this publication.
9) Attention is drawn to the possibility that some of the elements of this IEC Publication may be the subject of patent rights. IEC shall not be held responsible for identifying any or all such patent rights.

iTeh STANDARD PREVIEW
(standards.iteh.ai)
IEC 61169-40:2010
https://standards.iteh.ai/catalog/standards/sist/1e907545-c200-4dd0-a24ab-
Publication 2a0e/iec-61169-40-2010

International Standard IEC 61169-40 has been prepared by subcommittee 46F: R.F. and microwave passive components, of IEC technical committee 46: Cables, wires, waveguides, R.F. connectors, R.F. and microwave passive components and accessories.

This first edition cancels and replaces IEC/PAS 61169-40, published in 2008, of which it constitutes a minor revision. The changes with respect to the PAS are solely editorial.

The text of this standard is based on the following documents:

CDV	Report on voting
46F/167/CDV	46F/180/RVC

Full information on the voting for the approval of this standard can be found in the report on voting indicated in the above table.

This publication has been drafted in accordance with the ISO/IEC Directives, Part 2.

A list of all parts in the IEC 61169 series, published under the general title *Radio-frequency connectors*, can be found on the IEC website.

The committee has decided that the contents of this amendment and the base publication will remain unchanged until the stability date indicated on the IEC web site under "http://webstore.iec.ch" in the data related to the specific publication. At this date, the publication will be

- reconfirmed,
- withdrawn,
- replaced by a revised edition, or
- amended.

IMPORTANT – The 'colour inside' logo on the cover page of this publication indicates that it contains colours which are considered to be useful for the correct understanding of its contents. Users should therefore print this document using a colour printer.

iTeh STANDARD PREVIEW
(standards.iteh.ai)
IEC 61169-40:2010
https://standards.iteh.ai/catalog/standards/sist/1e907545-c200-4dd5-84ab-53affe68f3a8/iec-61169-40-2010

RADIO-FREQUENCY CONNECTORS –

Part 40: Sectional specification for 2.4 series RF connectors

1 Scope

This part of IEC 61169 provides information and rules for preparation of detail specification of 2.4 series R.F connectors together with the pro-forma blank detail specification.

The 2.4 series thread mated connectors with characteristic impedance 50 Ω are used for millimeter wave applications, connecting with RF cables or microstrips. The operating frequency limit is up to 50 GHz.

These connectors can be intermated with 1,85 mm (IEC 61169-32 and IEEE 287-2007) connectors.

It also prescribes mating face dimensions for high performance connectors grade 1, dimensional detail of standard test connectors grade 0, gauging information and tests selected from IEC 61169-1 applicable to all detail specifications relating to 2.4 series RF connectors.

iTeh STANDARD PREVIEW

This specification indicates recommended performance characteristics to be considered when writing a detail specification and it covers test schedules and inspection requirements for assessment levels M and H.

(standards.iteh.ai)
IEC 61169-40:2010
https://standards.iteh.ai/catalog/standards/sist/1e907545-c200-4dd5-84ab-53affe68f3a8/iec-61169-40-2010

NOTE Metric dimension are original dimensions.

All undimensioned pictorial configurations are for reference purpose only.

2 Normative references

The following referenced documents are indispensable for the application of this document. For dated references, only the edition cited applies. For undated references, the latest edition of the referenced document (including any amendments) applies.

IEC 61169-1:1992, *Radio-frequency connectors – Part 1: Generic specification – General requirements and measuring methods*[1]
Amendment 1 (1996)
Amendment 2 (1997)

IEC 60068-1, *Environmental testing – Part 1: General and guidance*

---

[1] There exists a consolidated edition 1.2 (1998) that comprises IEC 61169-1:1992, its Amendment 1:1996 and its Amendment 2:1997.

3 Mating face and gauge information

3.1 Dimensions – High performance connectors – Grade 1

3.1.1 Connector with pin-centre contact

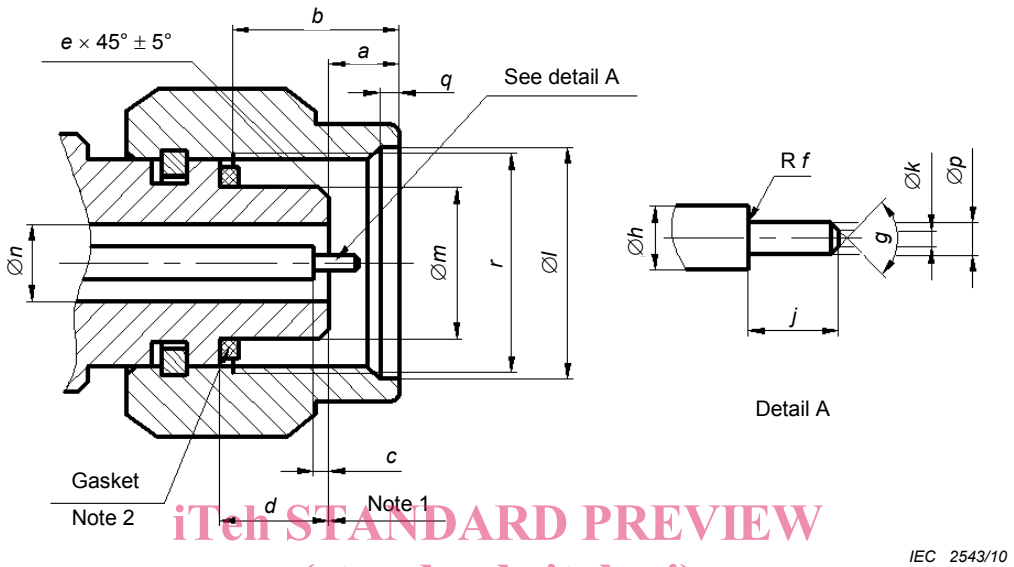

iTeh STANDARD PREVIEW
(standards.iteh.ai)

Figure 1 – Connector with pin-centre contact
(for dimensions and notes, see Table 1)

IEC 61169-40:2010
https://standards.iteh.ai/catalog/standards/sist/1e907545-c200-4dd5-84ab-53affe68f3a8/iec-61169-40-2010

Table 1 – Dimensions of connector with pin-centre contact

Ref.	mm		Notes
	Min.	Max.	
a	1,850	2,450	
b	4,340	4,660	
c	0,000	0,076	
d	3,380	3,480	
e	0,200	0,400	
f	—	0,050	
g	56°	64°	
h	1,029	1,054	
j	1,270	1,524	
k	0,200	0,300	
l	7,010	7,110	
m	4,725	4,750	
n	2,387 5	2,412 5	
p	0,506	0,523	
q	0,510	0,770	
r	M7×0,75-6H		

NOTE 1 Mechanical and electrical reference plane.

NOTE 2 Gasket possible on grade 1 connectors.

3.1.2 Connector with socket-centre contact

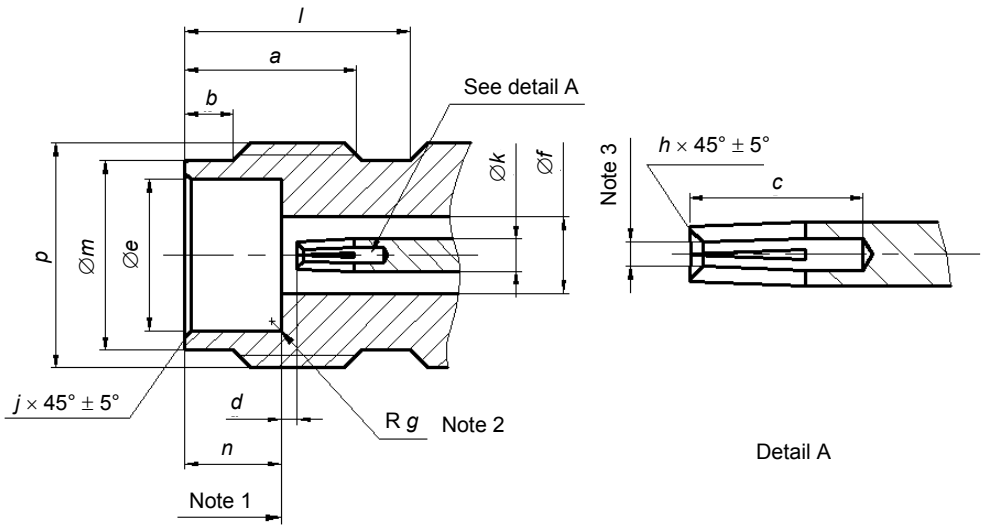

Figure 2 – Connector with socket-centre contact
(for dimensions and notes, see Table 2)

iTeh STANDARD PREVIEW
(standards.iteh.ai)

Table 2 – Dimensions of connector with socket-centre contact

IEC 61169-40:2010
https://standards.iteh.ai/catalog/standards/sist/1e907545-c200-4dd5-84ab-53ade8f3a8/iec-61169-40-2010

Ref.	mm		Notes
	Min.	Max.	
a	4,800	5,060	
b	1,370	1,630	
c	2,650	—	
d	0,000	0,076	
e	4,770	4,795	
f	2,387 5	2,412 5	
g	—	0,130	
h	0,100	0,127	
j	0,100	0,200	
k	1,029	1,054	
l	6,000	—	
m	5,790	5,890	
n	3,000	3,100	
p	M7×0,75-6g		

NOTE 1 Mechanical and electrical reference plane.

NOTE 2 Design for root cut to be allowed.

NOTE 3 Design for slotting is optional, and should meet electrical and mechanical requirements, when mating with Ø 0,506 mm ~ Ø 0,523 mm gauge pin.

3.2 Gauges

3.2.1 Gauge pins for socket-centre contact

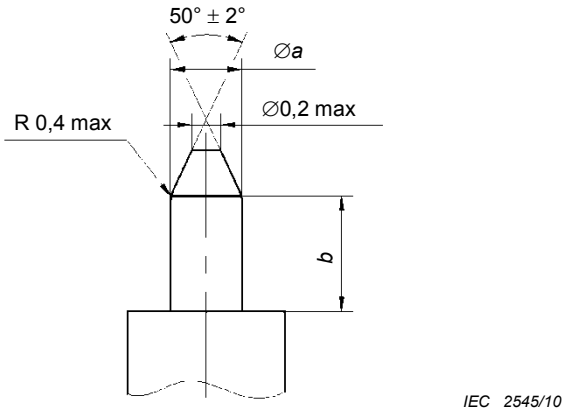

Figure 3 – Gauge pins for socket-centre contact
(for dimensions and notes, see Table 3)

Table 3 – Dimensions of gauge pins for socket-centre contact

Ref.	Gauge A Maximum material for sizing purposes		Gauge B Minimum material for measurement of retention force Mass of gauge: 26 g ± 1 g	
	mm		mm	
	Min.	Max.	Min.	Max.
a	0,516	0,518 5	0,503 5	0,506 0
b	1,50	2,00	1,50	2,00
Material: steel, polished, surface roughness: Ra=0,4 μm maximum.				

iTeh STANDARD PREVIEW
(standards.iteh.ai)
IEC 61169-40:2010
https://standards.iteh.ai/catalog/standards/sist/1e907545-e200-4dd5-84ab-53afe68f3a8/iec-61169-40-2010

3.2.2 Test procedure

The gauge A shall be inserted into the socket-centre contact one time with a minimum depth of 0,68 mm. This is a sizing operation and should only be carried out when the socket-centre contact is removed from the connector.

After this, the gauge B shall be inserted into socket-centre contact. The contact shall retain the mass of the gauge in a vertical downward position.

3.3 Dimensions – Standard test connectors – Grade 0

3.3.1 Connector with pin-centre contact

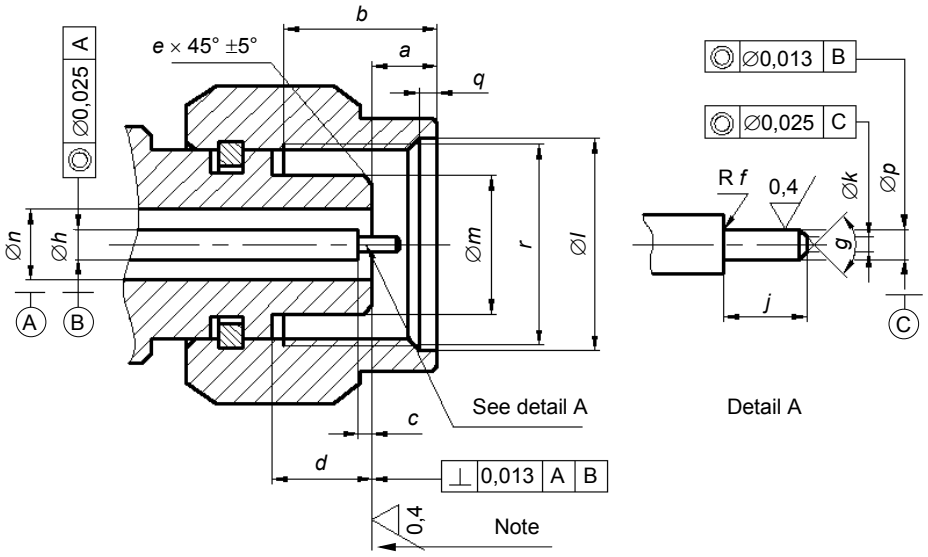

iTeh STANDARD PREVIEW
(standards.iteh.ai)

Figure 4 – Connector with pin-centre contact
(for dimensions and notes, see Table 4)

IEC 61169-40:2010
https://standards.iteh.ai/catalog/standards/sist/1e0f2546-a200-4bd5-84d4-53affe68f3a8/iec-61169-40-2010

Table 4 – Dimensions of connector with pin-centre contact

Ref.	mm		Notes
	Min.	Max.	
a	1,850	2,450	
b	4,370	4,630	
c	0,000	0,020	
d	3,380	3,480	
e	0,250	0,360	
f	—	0,050	
g	56°	64°	
h	1,038 3	1,046 3	
j	1,335	1,445	
k	0,200	0,300	
l	7,010	7,110	
m	4,725	4,750	
n	2,395	2,405	
p	0,506	0,516	
q	0,510	0,770	
r	M7×0,75-6H		
NOTE Mechanical and electrical reference plane.			

3.3.2 Connector with socket-centre contact

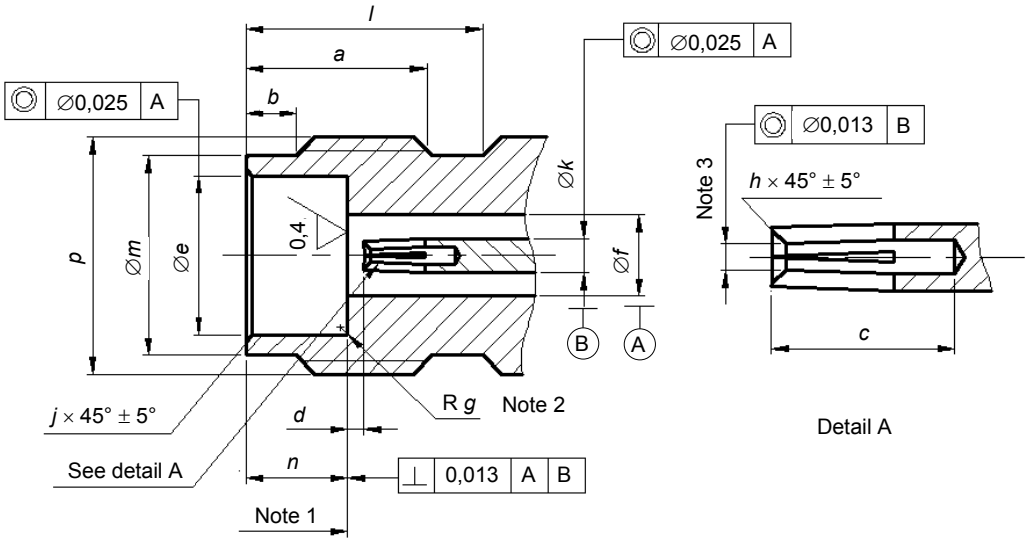

Figure 5 – Connector with socket-centre contact
(for dimensions and notes, see Table 5)

iTeh STANDARD PREVIEW
(standards.iteh.ai)

Table 5 – Dimensions of connector with socket-centre contact

IEC 61169-40:2010
https://standards.iteh.ai/catalog/standards/sist/1e907545-c200-4dd5-84ab-55affe68f3a8/iec-61169-40-2010

Ref.	mm		Notes
	Min.	Max.	
a	4,800	5,060	
b	1,370	1,630	
c	2,650	—	
d	0,000	0,020	
e	4,770	4,795	
f	2,395	2,405	
g	—	0,130	
h	0,100	0,130	
j	0,100	0,200	
k	1,038 3	1,046 3	
l	6,000	—	
m	5,790	5,890	
n	3,000	3,100	
p	M7×0,75-6g		

NOTE 1 Mechanical and electrical reference plane.

NOTE 2 Design for root cut to be allowed.

NOTE 3 Design for slotting is optional, and should meet electrical and mechanical requirements, when mating with Ø 0,506 mm ~ Ø 0,516 mm gauge pin.

4 Quality assessment procedure

4.1 General

The following subclauses provide recommended rating, performance and test conditions to be considered when writing a detail specification. They also provide an appropriate schedule of tests with minimum levels of conformance inspection sampling, together with the pro-forma blank detail specification (BDS) and instructions for the preparation of a detail specification.

4.2 Rating and characteristics (see Clause 6 of IEC 61169-1)

The values indicated below (Table7) are recommended for 2.4 series RF connectors and are given for the writer of the detail specification. They are applicable for the condition when the connectors are fully mated.

Certain tests are listed without any recommended values being given. These tests will usually not be required. When these tests are required, appropriate values shall be entered in the detail specification at the discretion of the specification writer.

Preferred climatic categories are given in Table 6.

Table 6 – Preferred climatic categories (see IEC 60068-1)

Category designation	Letter*	Temperature range	Damp heat steady state
40/85/21	A	–40 °C to +85 °C	21 days
55/155/56	B	–55 °C to +155 °C	56 days
* To be included in the IEC type designation.			

iTeh STANDARD PREVIEW
(standards.iteh.ai)
IEC 61169-40:2010
https://standards.iteh.ai/catalog/standards/sist/1e907545-c200-4dd5-84ab-53affe68f3a8/iec-61169-40-2010

Table 7 – Rating and characteristics

Rating and characteristics	Test method IEC 61169-1 Subclause	Values	Remarks deviations from standard test method
Electrical			
Nominal impedance		50 Ω	
Frequency range Grade1 connectors - flexible cable, straight styles - semi-rigid cable, straight styles - right-angle styles [h]		DC ~ 50 GHz	Or upper frequency limit of cable
Reflection factor [a] Grade 1 connectors - straight styles - right-angle styles [h] - component mounting styles - solder bucket and PCB mounting styles	9.2.1	 DC ~ 18 GHz 0,050 1 max. 18 GHz ~ 26,5 GHz 0,063 1 max. 26,5 GHz ~ 50 GHz 0,125 9 max. See DS See DS See DS	
Centre contact resistance[b] - initial - after conditioning	9.2.3	 ≤4,0 mΩ ≤10,0 mΩ	
Outer conductor continuity [b] - initial - after conditioning	9.2.3	 ≤2,5 mΩ ≤7,5 mΩ	
Insulation resistance [b] - initial - after conditioning	9.2.5	 ≥1 000 MΩ ≥200 MΩ	
Proof voltage at sea-level [c,d] - uncabled styles - semi-rigid 2,29 mm (0,090 in) diameter - semi-rigid 2,16 mm (0,086 in) diameter - semi-rigid 1,19 mm (0,047 in) diameter	9.2.6	 500 V 500 V 335 V 125 V	86 kPa ~ 106 kPa
Proof voltage at 4,4 kPa [c,d] - uncabled styles - semi-rigid 2,29 mm (0,090 in) diameter - semi-rigid 2,16 mm (0,086 in) diameter - semi-rigid 1,19 mm (0 047 in) diameter	9.2.6	 85 V 85 V 65 V 45 V	4,4 kPa approximately equivalent to 20 km
Environmental test voltage at sea level [c,d] - uncabled styles - semi-rigid 2,29 mm (0,090 in) diameter - semi-rigid 2,16 mm (0,086 in) diameter - semi-rigid 1,19 mm (0,047 in) diameter	9.2.6	 335 V 335 V 150 V 85 V	86 kPa ~ 106 kPa
Environmental test voltage at 4,4 kPa [c,d] - uncabled styles - semi-rigid 2,29 mm (0,090 in) diameter - semi-rigid 2,16 mm (0,086 in) diameter - semi-rigid 1,19 mm (0,047 in) diameter	9.2.6	 85 V 85 V 65 V 45 V	4,4 kPa approximately equivalent to 20 km
Screening effectiveness (straight cables only)[g]	9.2.8	≥100 dB at 1 GHz	$Z_t \leq 1$ mΩ
Discharge test (corona effect)	9.2.9	See DS	Extinction voltage

iTeh STANDARD PREVIEW
(standards.iteh.ai)
IEC 61169-40:2010
https://standards.iteh.ai/catalog/standards/sist/1e907545-c200-4dd5-84ab-53affe68f3a8/iec-61169-40-2010