SLOVENSKI STANDARD
SIST EN 2997-3:2001

01-januar-2001

Aerospace series - Connectors, electrical, circular, coupled by threaded ring, fire-resistant or non fire-resistant, operating temperatures 175°C continuous, 200°C continuous, 260°C peak - Part 3: Square flange receptacle - Product standard

Aerospace series - Connectors, electrical, circular, coupled by threaded ring, fire-resistant or non fire-resistant, operating temperatures 175°C continuous, 200°C continuous, 260°C peak - Part 3: Square flange receptacle - Product standard

Luft- und Raumfahrt - Elektrische Rundsteckverbinder mit Schraubkupplung, feuerbeständig oder nicht feuerbeständig, Betriebstemperaturen 175°C konstant, 200°C konstant, 260°C Spitze - Teil 3: Fester Steckverbinder mit quadratischem Montageflansch - Produktnorm

Série aérospatiale - Connecteurs électriques circulaires a accouplement par bague filetée, résistant au feu ou non, températures d'utilisation 175°C continu, 200°C continu, 260°C en pointe - Partie 3: Embase a fixation par collerette carrée - Norme de produit

Ta slovenski standard je istoveten z: EN 2997-3:1997

ICS:

49.060	Letalska in vesoljska elektriļ na oprema in sistemi	Aerospace electric equipment and systems

SIST EN 2997-3:2001 **en**

EUROPEAN STANDARD

NORME EUROPÉENNE

EUROPÄISCHE NORM

EN 2997-3

June 1997

ICS 49.060

Descriptors: aircraft industry, connecting equipment, electric connectors, fixing, bed plates, specifications

English version

Aerospace series - Connectors, electrical, circular, coupled by threaded ring, fire-resistant or non fire-resistant, operating temperatures 175°C continuous, 200°C continuous,260°C peak - Part 3: Square flange receptacle - Product standard

Série aérospatiale - Connecteurs électriques circulaires à accouplement par bague filetée, résistant au feu ou non, températures d'utilisation 175°C continu, 200°C continu, 260°C en pointe - Partie 3: Embase à fixation par collerette carrée - Norme de produit

Luft- und Raumfahrt - Elektrische Rundsteckverbinder mit Schraubkupplung, feuerbeständig oder nicht feuerbeständig, Betriebstemperaturen 175°C konstant, 200°C konstant, 260°C Spitze - Teil 3: Fester Steckverbinder mit quadratischem Montageflansch - Produktnorm

This European Standard was approved by CEN on 1996-08-04. CEN members are bound to comply with the CEN/CENELEC Internal Regulations which stipulate the conditions for giving this European Standard the status of a national standard without any alteration.

Up-to-date lists and bibliographical references concerning such national standards may be obtained on application to the Central Secretariat or to any CEN member.

The European Standards exist in three official versions (English, French, German). A version in any other language made by translation under the responsibility of a CEN member into its own language and notified to the Central Secretariat has the same status as the official versions.

CEN members are the national standards bodies of Austria, Belgium, Czech Republic, Denmark, Finland, France, Germany, Greece, Iceland, Ireland, Italy, Luxembourg, Netherlands, Norway, Portugal, Spain, Sweden, Switzerland and United Kingdom.

CEN

European Committee for Standardization
Comité Européen de Normalisation
Europäisches Komitee für Normung

Central Secretariat: rue de Stassart,36 B-1050 Brussels

Foreword

This European Standard has been prepared by the European Association of Aerospace Manufacturers (AECMA).

After inquiries and votes carried out in accordance with the rules of this Association, this Standard has received the approval of the National Associations and the Official Services of the member countries of AECMA, prior to its presentation to CEN.

This European Standard shall be given the status of a national standard, either by publication of an identical text or by endorsement, at the latest by December 1997, and conflicting national standards shall be withdrawn at the latest by December 1997.

According to the CEN/CENELEC Internal Regulations, the national standards organizations of the following countries are bound to implement this European Standard: Austria, Belgium, Czech Republic, Denmark, Finland, France, Germany, Greece, Iceland, Ireland, Italy, Luxembourg, Netherlands, Norway, Portugal, Spain, Sweden, Switzerland and the United Kingdom.

1 Scope

This standard specifies the characteristics of square flange mounted receptacles in the family of circular electrical connectors coupled by threaded ring.

It applies to models defined in table 4.

For contacts, filler plugs and rear accessories associated with this receptacle see EN 2997-002. For plugs and protective covers see EN 2997-008 and EN 2997-009 respectively.

2 Normative references

This European Standard incorporates by dated or undated reference provisions from other publications. These normative references are cited at the appropriate places in the text and the publications are listed hereafter. For dated references, subsequent amendments to or revisions of any of these publications apply to this European Standard only when incorporated in it by amendment or revision. For undated references the latest edition of the publication referred to applies.

EN 2997-001 Aerospace series - Connectors, electrical, circular, coupled by threaded ring, fire-resistant or non fire-resistant, operating temperatures 175 °C continuous, 200 °C continuous, 260 °C peak - Part 001 : Technical specification [1)]

EN 2997-002 Aerospace series - Connectors, electrical, circular, coupled by threaded ring, fire-resistant or non fire-resistant, operating temperatures 175 °C continuous, 200 °C continuous, 260 °C peak - Part 002 : Specification of performance and contact arrangements [1)]

EN 2997-008 Aerospace series - Connectors, electrical, circular, coupled by threaded ring, fire-resistant or non fire-resistant, operating temperatures 175 °C continuous, 200 °C continuous, 260 °C peak - Part 008 : Plug - Product standard [1)]

EN 2997-009 Aerospace series - Connectors, electrical, circular, coupled by threaded ring, fire-resistant or non fire-resistant, operating temperatures 175 °C continuous, 200 °C continuous, 260 °C peak - Part 009 : Protective cover for receptacle - Product standard [1)]

EN 3155-002 Aerospace series - Electrical contacts used in elements of connection - Part 002 : List and utilization of contacts [1)]

3 Terminology

See EN 2997-001.

1) Published as AECMA Prestandard at the date of publication of this standard

4 Required characteristics

4.1 Dimensions, mass

See figure 1 and table 1.
Dimensions and tolerances are in millimeters ; they apply after surface treatment.

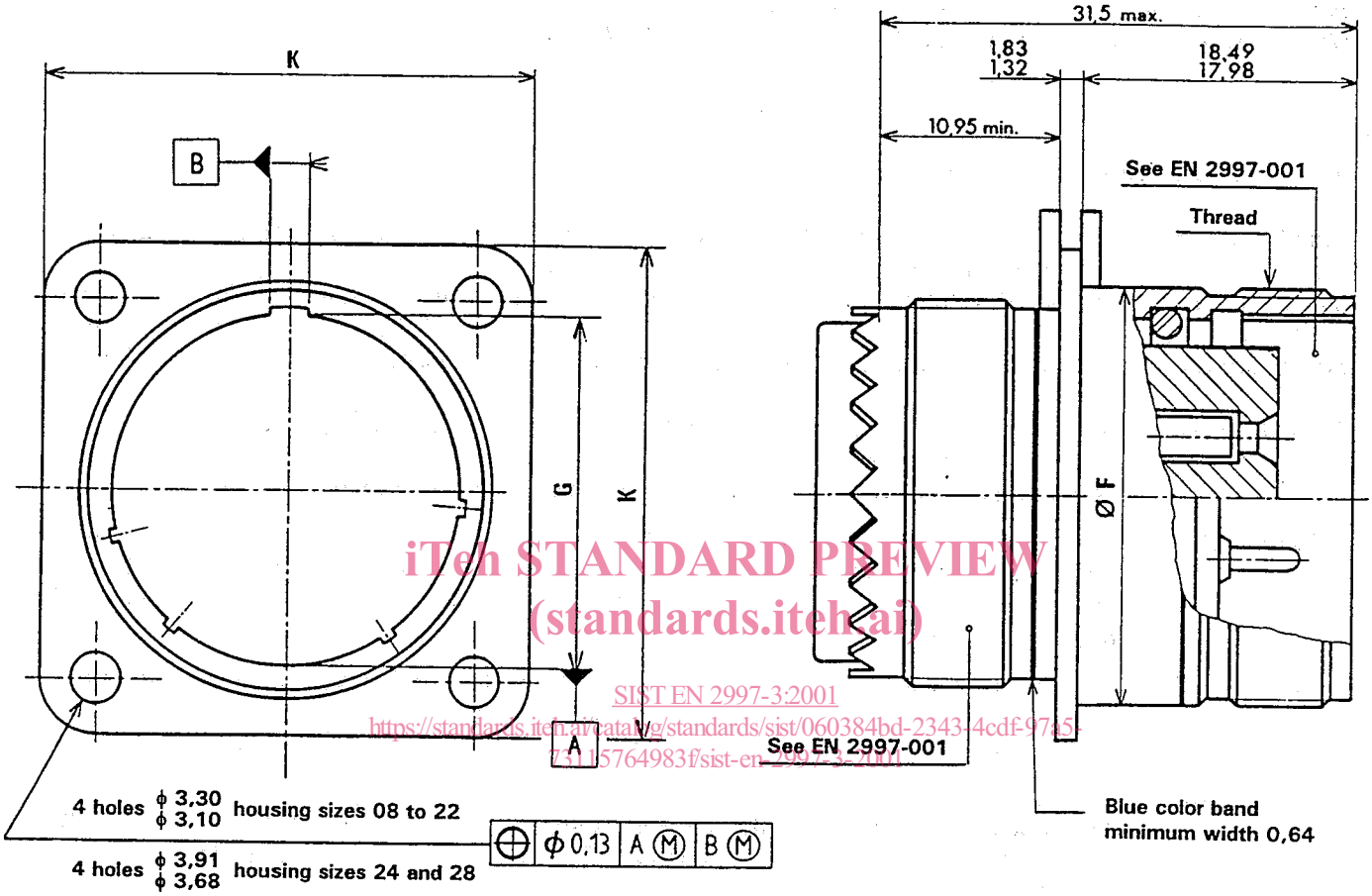

Figure 1

Table 1

Housing size	*F* max.	*G*	*K* max.	*K* min.	Mass g [1] max. Stainless steel	Mass g [1] max. Aluminium alloy
08	14,27	15,09	20,75	20,49	19	11
10	17,67	18,26	23,93	23,67	28	16
12	22,22	20,62	26,32	26,06	39	27
14	23,77	23,01	28,71	28,45	51	30
16	26,97	24,61	31,88	31,62	62	34
18	30,15	26,97	34,24	33,98	73	36
20	33,32	29,36	36,63	36,37	82	40
22	36,49	31,75	39,80	39,54	90	51
24	39,67	34,92	43,39	43,13	105	58
28	46,02	39,67	50,93	50,67	126	88

1) Mass without accessory and without contacts

4.2 Panel cut-out and mounting of connectors

See figure 2 and table 2 for panel cut-out and figure 3 for mounting of connectors. Dimensions and tolerances are in millimeters.

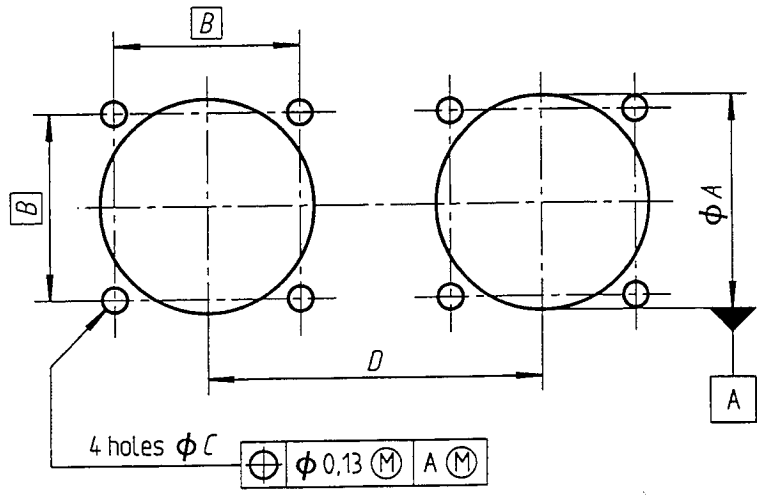

Figure 2

Table 2

Housing size	*A* min.	*B*	*C*	*D* min.
08	15,80	15,09		31,70
10	18,70	18,26		34,90
12	23,40	20,62		39,60
14	24,90	23,01	3,30	41,25
16	28,30	24,61	3,10	44,45
18	31,10	26,97		47,35
20	34,50	29,36		51,90
22	37,50	31,75		54,10
24	40,60	34,92	3,91	57,25
28	48,00	39,67	3,68	65,25

Front mounting

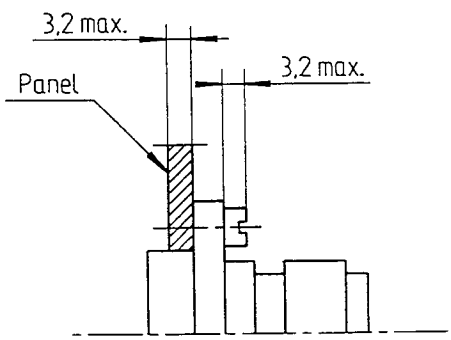

Rear mounting

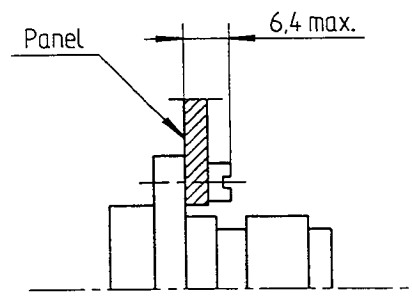

Figure 3

4.3 Material, surface treatment

See table 4.

4.4 Main general characteristics

See EN 2997-002.

4.5 Possible combinations of plugs and receptacles

See table 3.

Table 3

Receptacles	S	SE	WS	RS
Plugs	K or S	KE or SE	W or WS	R or RS

5 Designation

EXAMPLE :

Description block	Identity block
ELECTRICAL CONNECTOR, RECEPTACLE	EN2997RS01814M7

Number of the basic standard

Model (see table 4)

Square-flange mounted receptacle (see EN 2997-002)

Housing size and contact arrangement (see EN 2997-002)

Type of contact (see table 5)

Polarization (see EN 2997-002)

NOTE : If necessary, the code I9005 shall be placed between the description block and the identity block.

Table 4 : Connector models

Models	Description
WS	Sealed receptacle with housing (shell) in olive-green, cadmium-plated aluminium alloy, conducting finish, 500 h resistance to salt mist, crimp contacts, maximum operating temperature 175 °C continuous
RS	Sealed receptacle with housing (shell) in nickel-plated aluminium alloy, crimp contacts, maximum operating temperature 200 °C continuous
S	Sealed receptacle with housing (shell) in passivated stainless steel, crimp contacts, fire-resistant, maximum operating temperature 200 °C continuous
SE	Sealed receptacle with housing (shell) in passivated stainless steel, crimp contacts, fire-resistant, maximum operating temperature 260 °C peak